This is a digital copy of a book that was preserved for generations on library shelves before it was carefully scanned by Google as part of a project to make the world's books discoverable online.

It has survived long enough for the copyright to expire and the book to enter the public domain. A public domain book is one that was never subject to copyright or whose legal copyright term has expired. Whether a book is in the public domain may vary country to country. Public domain books are our gateways to the past, representing a wealth of history, culture and knowledge that's often difficult to discover.

Marks, notations and other marginalia present in the original volume will appear in this file - a reminder of this book's long journey from the publisher to a library and finally to you.

Usage guidelines

Google is proud to partner with libraries to digitize public domain materials and make them widely accessible. Public domain books belong to the public and we are merely their custodians. Nevertheless, this work is expensive, so in order to keep providing this resource, we have taken steps to prevent abuse by commercial parties, including placing technical restrictions on automated querying.

We also ask that you:

+ *Make non-commercial use of the files* We designed Google Book Search for use by individuals, and we request that you use these files for personal, non-commercial purposes.
+ *Refrain from automated querying* Do not send automated queries of any sort to Google's system: If you are conducting research on machine translation, optical character recognition or other areas where access to a large amount of text is helpful, please contact us. We encourage the use of public domain materials for these purposes and may be able to help.
+ *Maintain attribution* The Google "watermark" you see on each file is essential for informing people about this project and helping them find additional materials through Google Book Search. Please do not remove it.
+ *Keep it legal* Whatever your use, remember that you are responsible for ensuring that what you are doing is legal. Do not assume that just because we believe a book is in the public domain for users in the United States, that the work is also in the public domain for users in other countries. Whether a book is still in copyright varies from country to country, and we can't offer guidance on whether any specific use of any specific book is allowed. Please do not assume that a book's appearance in Google Book Search means it can be used in any manner anywhere in the world. Copyright infringement liability can be quite severe.

About Google Book Search

Google's mission is to organize the world's information and to make it universally accessible and useful. Google Book Search helps readers discover the world's books while helping authors and publishers reach new audiences. You can search through the full text of this book on the web at `http://books.google.com/`

Digitized by Google

US Doc 4520.10

HARVARD COLLEGE
LIBRARY

FROM THE FUND OF
CHARLES MINOT
CLASS OF 1828

Digitized by Google

Digitized by Google

Digitized by Google

Digitized by Google

Digitized by Google

UNITED STATES REPORTS

VOLUME 119

CASES ADJUDGED

IN

THE SUPREME COURT

AT

OCTOBER TERM, 1886

J. C. BANCROFT DAVIS

REPORTER

NEW YORK AND ALBANY

BANKS & BROTHERS, LAW PUBLISHERS

1887

Digitized by Google

~~Ul 848~~
~~1 2305.1~~
Doc R 813.5
HARVARD COLLEGE
MAR 5 1888
LIBRARY.
Minot fund.

COPYRIGHT, 1886,
BY BANKS & BROTHERS.

ELECTROTYPED BY J. S. CUSHING & CO., BOSTON.

Digitized by Google

JUSTICES

OF THE

SUPREME COURT

DURING THE TIME OF THESE REPORTS.

MORRISON REMICK WAITE, Chief Justice.
SAMUEL FREEMAN MILLER, Associate Justice.
STEPHEN JOHNSON FIELD, Associate Justice.
JOSEPH P. BRADLEY, Associate Justice.
JOHN MARSHALL HARLAN, Associate Justice.
WILLIAM BURNHAM WOODS, Associate Justice.*
STANLEY MATTHEWS, Associate Justice.
HORACE GRAY, Associate Justice.
SAMUEL BLATCHFORD, Associate Justice.

AUGUSTUS HILL GARLAND, Attorney General.
GEORGE AUGUSTUS JENKS, Solicitor General.
JAMES HALL McKENNEY, Clerk.
JOHN GEORGE NICOLAY, Marshal.

---

* Mr. Justice Woods was ill and absent during the whole time in the present term covered by these decisions, and took no part in any of them except *Vicksburg and Meridian Railroad* v. *O'Brien*, p. 99, which was heard at last term, but its decision announced at this term.

Digitized by Google

Digitized by Google

TABLE OF CASES.

PAGE

Alderson, Freeman *v.* 185
Ashby *v.* Hall 526

Baldwin *v.* Black 643
Baltimore & Ohio Railroad *v.* Bates 464
Bank of British Columbia, Willamette Manufacturing Company *v.* 191
Bank of Kansas City, Goetz *v.* 551
Barrell *v.* Tilton 637
Bates, Baltimore & Ohio Railroad *v.* 464
Bell Telephone Company, Eldred *v.* 513
Bignall *v.* Gould 495
Black, Baldwin *v.* 643
Black, Story *v.* 235
Blair, Wilson *v.* 387
Borer *v.* Chapman 587
Branch *v.* Patrick 156
Brooks *v.* Clark 502
Buster, Halsted *v.* 341
Buttz *v.* Northern Pacific Railroad 55
Buzard *v.* Houston 347

California Paving Company *v.* Schalicke 401
Campbell *v.* Laclede Gas Company 445
Carey, Cunard Steamship Company *v.* 245
Chapman, Borer *v.* 587
Chicago and Alton Railroad *v.* Wiggins Ferry Company 615
Chicago and Northwestern Railway *v.* McLaughlin . 566
Chicago and Pacific Elevator Company, Johnson *v.* . 388
Choctaw Nation *v.* United States 1
Choctaw Nation, United States *v.* 1
Clark, Brooks *v.* 502

Digitized by Google

PAGE
Clark *v.* Wooster 322
Clark County, Whitford *v.* 522
Cleveland, Columbus, &c., Railroad *v.* McClung . . 454
Cobb, Schmidt *v.* 286
Cohn, Kramer *v.* 355
Coit *v.* Gold Amalgamating Company 343
Columbus Rolling Mill, Minneapolis & St. Louis Railway *v.* 149
Consolidated Safety-Valve Company *v.* Kunkle . . 45
Continental Insurance Company *v.* Rhoads . . . 237
Cope *v.* Valette Dry Dock Company 625
Crow *v.* Oxford 215
Cunard Steamship Company *v.* Carey 245

Dainese *v.* Kendall 53
District of Columbia, Donnelly *v.* 339
District of Columbia *v.* Shipman 148, 704
District of Columbia, Shipman *v.* 148, 704
Donnelly *v.* District of Columbia 339
Dunbar, White *v.* 47

East Tennessee, Virginia & Georgia Railroad *v.* Grayson 240
Eldred *v.* Bell Telephone Company 513
Enfield *v.* Jordan 680
Ex parte Mirzan 584
Ex parte Ralston 613

Farley, O'Malley *v.* 296
Ferguson, Pomace Holder Company *v.* 335
Ferry, Street *v.* 385
Fordyce, Peper *v.* 469
Fort Wayne, Wood *v.* 312
Freeman *v.* Alderson 185
French *v.* Hall 152
Furst and Bradley Company *v.* Newton 373

Germania Insurance Company *v.* Wisconsin 473
Gilbert *v.* Moline Plough Company 491
Glover, Huse *v.* 543
Goetz *v.* Bank of Kansas City 551

Digitized by Google

PAGE
Gold Amalgamating Company, Coit *v.* 343
Gould, Bignall *v.* 495
Grayson, East Tennessee, Virginia & Georgia Railroad *v.* 240
Greenwich Insurance Co. *v.* Providence & Stonington Steamship Co. 481

Haas, Thackrah *v.* 499
Hall, Ashby *v.* 526
Hall, French *v.* 152
Halsted *v.* Buster 341
Hancock *v.* Holbrook 586
Hanrick *v.* Patrick 156
Hamilton *v.* Vicksburg, Shreveport & Pacific Railroad 280
Hapgood *v.* Hewitt 226
Harrisburg (The) 199
Hartshorn *v.* Saginaw Barrel Company 664
Haskell, McCreery *v.* 327
Heiskell, Winchester *v.* 450
Hewitt, Hapgood *v.* 226
Holbrook, Hancock *v.* 586
Home Insurance Company *v.* New York 129
Houston, Buzard *v.* 347
Houston, New Orleans *v.* 265
Hubbard *v.* Investment Company 696
Huse *v.* Glover 543
Hussey, Palmer *v.* 96
Hutton, Ivinson *v.* 604

Illinois, Kerr *v.* 436
Investment Company, Hubbard *v.* 696
Iron Mountain and Helena Railroad *v.* Johnson . . 608
Ives *v.* Sargent 652
Ivinson *v.* Hutton 604

Jennings, Oregon *v.* 74
Johnson *v.* Chicago and Pacific Elevator Company . 388
Johnson, Iron Mountain and Helena Railroad *v.* . 608
Jones, United States *v.* 477
Jordan, Enfield *v.* 680

Digitized by Google

PAGE
Kendall, Dainese *v.* 53
Kerr *v.* Illinois 436
Knapp, Williamsport Bank *v.* 357
Kramer *v.* Cohn 355
Kunkle, Consolidated Safety-Valve Company *v.* . . . 45

Laclede Gas Company, Campbell *v.* 445
Le Breton, Newhall *v.* 259

McClung, Cleveland, Columbus, &c., Railroad *v.* . 454
McCreery *v.* Haskell 327
McLaughlin, Chicago and Northwestern Railway *v.* . 566
Mace *v.* Merrill 581
Merrill, Mace *v.* 581
Minneapolis & St. Louis Railway *v.* Columbus Rolling Mill 149
Mirzan, *Ex parte* 584
Moline Plough Company, Gilbert *v.* 491

Newhall *v.* Le Breton 259
New Orleans *v.* Houston 265
Newton *v.* Furst & Bradley Company 373
New York, Home Insurance Company *v.* 129
New York, Philadelphia Fire Association *v.* 110
New York, Lake Erie and Western Railroad *v.* Nickals 296
Nichols, Wolverton *v.* 485
Nickals, New York, Lake Erie and Western Railroad *v.* 296
Northampton Bank, Wylie *v.* 361
Northern Pacific Railroad, Buttz *v.* 55
Northern Pacific Railroad *v.* Paine 561

O'Brien, Vicksburg & Meridian Railroad *v.* . . . 99
O'Malley *v.* Farley 296
Oregon *v.* Jennings 74
Oxford, Crow *v.* 215

Paine, Northern Pacific Railroad *v.* 561
Palmer *v.* Hussey 96
Patrick, Branch *v.* 156
Patrick, Hanrick *v.* 156

Digitized by Google

PAGE
People's Insurance Company *v.* Wisconsin 477
Peper *v.* Fordyce 469
Philadelphia Fire Association *v.* New York . . 110
Pomace Holder Company *v.* Ferguson 335
Providence and Stonington Steamship Co., Greenwich Insurance Co. *v.* 481

Ralston, *Ex parte* 613
Rauscher, United States *v.* 407
Rhoads, Continental Insurance Company *v.* 237
Riessner, Sharp *v.* 631
Robinson, Sutter *v.* 530

Saginaw Barrel Company, Hartshorn *v.* 664
Sallinger, Washington County *v.* 176
Sargent, Ives *v.* 652
Schalicke, California Paving Company *v.* 401
Schmidt *v.* Cobb 286
Sharp *v.* Riessner 631
Shipman *v.* District of Columbia 148, 704
Shipman, District of Columbia *v.* 148, 704
Story *v.* Black 235
Street *v.* Ferry 385
Sutter *v.* Robinson 530

Thackrah *v.* Haas 499
The Harrisburg 199
Tilton, Barrell *v.* 637

United States *v.* Choctaw Nation 1
United States, Choctaw Nation *v.* 1
United States *v.* Jones 477
United States *v.* Rauscher 407

Valette Dry Dock Company, Cope *v.* 625
Vicksburg & Meridian Railroad *v.* O'Brien 99
Vicksburg, Shreveport & Pacific Railroad, Hamilton *v.* 280

Washington County *v.* Sallinger 176
White *v.* Dunbar 47
Whitford *v.* Clark County 522

Digitized by Google

PAGE
Wiggins Ferry Company, Chicago and Alton Railroad *v.* 615
Willamette Manufacturing Company *v.* Bank of British Columbia 191
Williamsport Bank *v.* Knapp 357
Wilson *v.* Blair 387
Winchester *v.* Heiskell 450
Wisconsin, Germania Insurance Company *v.* 473
Wisconsin, People's Insurance Company *v.* 477
Wolverton *v.* Nichols 485
Wood *v.* Fort Wayne 312
Wooster, Clark *v.* 322
Wylie *v.* Northampton Bank 361

Digitized by Google

THE TABLE OF CASES

CITED IN OPINIONS.

PAGE

Adams *v.* Hannibal & St. Joseph Railroad, 74 Missouri, 553; *S. C.* Am. & Eng. R.R. Cas. 416 106, 560
Adams *v.* Ross, 1 Vroom (30 N. J. L.) 505 176
Adams County *v.* Burlington & Missouri Railroad Co., 112 U. S. 123 116
Adriance *v.* Lagrave, 59 N. Y. 110 425, 426, 427
Airhart *v.* Massieu, 98 U. S. 491 169
Allen *v.* McVeigh, 107 U. S. 433 624
Allerton *v.* Allerton, 50 N. Y. 670 502
Ambler *v.* Choteau, 107 U. S. 586 352
Ames *v.* Kansas, 111 U. S. 449 475
Amory *v.* Amory, 95 U. S. 186 240
Anderson County *v.* Beal, 113 U. S. 227 223
Andrews *v.* Spear, 48 Texas, 567 169
Armstrong *v.* Beadle, 5 Sawyer, 484 209
Aspden *v.* Nixon, 4 How. 467 600
Atlantic Works *v.* Brady, 107 U. S. 192 338
Avart *v.* King, 14 La. 62 650
Ayres *v.* Watson, 113 U. S. 594 467
Ayres *v.* Wiswall, 112 U. S. 187 511
Baker *v.* Bolton, 1 Camp. 493 207
Bank of Augusta *v.* Earle, 13 Pet. 519 118
Bank *v.* McVeigh, 98 U. S. 332 624
Barbin *v.* Police Jury of Avoyelles, 15 La. Ann. 559 285
Barnard *v.* Vermont & Massachusetts Railroad, 7 Allen, 512 306
Barney *v.* Latham, 103 U. S. 205 512
Beall *v.* New Mexico, 16 Wall. 535 401
Beecher *v.* Wetherby, 95 U. S. 517 66
Belfast (The), 7 Wall. 624 397, 399
Bellefontaine Railway *v.* Hunter, 33 Ind. 335 106
Bennett *v.* City of New Orleans, 14 La. Ann. 120 285
Bethell *v.* Demaret, 10 Wall. 537 624
Bible Society *v.* Grove, 101 U. S. 610 467
Blanchard *v.* Brooks, 12 Pick. 47 176
Blandford *v.* State, 10 Tex. Ct. of App. 627 429

PAGE

Boardman *v.* Lake Shore & Michigan Southern Railway, 84 N. Y. 157 311
Bondurant *v.* Watson, 103 U. S. 278 614
Börs *v.* Preston, 111 U. S. 252 239
Boston & Maine Railroad *v.* Bartlett, 3 Cush. 224 151
Bostwick *v.* Brinkerhoff, 106 U. S. 3 54
Boyce *v.* Grundy, 3 Pet. 210 352
Boynton *v.* Hatch, 47 N. Y. 225 345
Boys *v.* Ancell, 5 Bing. N. C. 390; *S. C.* 7 Scott, 364 498
Bradley *v.* United States, 104 U. S. 442 525
Brooklyn *v.* Insurance Co., 99 U. S. 362 693
Brown *v.* Jackson, 3 Wheat. 449 176
Brown *v.* Keene, 8 Pet. 112 240
Brown *v.* Swann, 10 Pet. 497 354
Bryant *v.* Livermore, 20 Minn. 313 601
Burbank *v.* Bigelow, 92 U. S. 179 453
Bushnell *v.* Kennedy, 9 Wall. 387 239
Bussey *v.* Excelsior Manufacturing Co., 110 U. S. 131 338
Buzard *v.* Houston, 119 U. S. 347 357
Cadell *v.* Black, 5 Paton, 567 212
California Artificial Stone Paving Co. *v.* Freeborn, 8 Sawyer, 443 405
California Artificial Stone Paving Co. *v.* Molitor, 7 Sawyer, 190 405
California Paving Co. *v.* Molitor, 113 U. S. 609 360
Calvert *v.* Fitzgerald, Litt. Sel. Cases, 388 102
Cannon *v.* New Orleans, 20 Wall. 577 400, 550
Carcass *v.* Judge of First District Court, 23 La. Ann. 719 273
Cardwell *v.* American Bridge Co., 113 U. S. 205 285, 547
Carey *v.* Berkshire Railroad, 1 Cush. 475; *S. C.* 48 Am. Dec. 616 204, 207
Carr *v.* Duval, 14 Pet. 77 151
Carr *v.* Le Fevre, 27 Penn. St. 413 345
Carroll County *v.* Smith, 111 U. S. 556 692

Digitized by Google

PAGE
Chaffee *v.* Rutland Railroad, 55 Vt. 110 308
Charles Morgan (The), 2 Flippin, 274 208
Chew Heong *v.* United States, 112 U. S. 536 419
Chicago, Burlington, &c., Railroad *v.* Riddle, 60 Ill. 534 106
Chicago & Northwestern Railroad *v.* Fillmore, 57 Ill. 265 106
City of Brussels (The), 6 Ben. 370 207
City of Pekin *v.* Reynolds, 31 Ill. 529 693
Clark *v.* Smith, 13 Pet. 195 67
Clatsop Chief (The), 7 Sawyer, 274; *S. C.* 8 Fed. Rep. 163 209
Clearweather *v.* Meredith, 1 Wall. 25 304
Clifford *v.* Brooke, 13 Ves. 131 352
Clifton (The), 3 Hagg. Adm. 117 628
Coggins *v.* Helmsley, 5 Cent. Law Jour. 418 207
Coggs *v.* Bernard, 2 Ld. Raym. 909 649
Columbia (The), 27 Fed. Rep. 900 212
Commissioners *v.* January, 94 U. S. 202 223
Commonwealth *v.* Hawes, 13 Bush, 697 427
Consolidated Safety Valve Co. *v.* Crosby Steam-Gauge Valve Co., 113 U. S. 157 45, 325
Continental Life Insurance Co. *v.* Rhoads, 119 U. S. 237 342, 471
Continental Windmill Co. *v.* Empire Windmill Co., 8 Blatchford, 295 233
Coon *v.* Wilson, 113 U. S. 268 663
Cooper *v.* Reynolds, 10 Wall. 308 188
Cooper Manufacturing Co. *v.* Ferguson, 113 U. S. 727 118
Core *v.* Vinal, 117 U. S. 347 511
Cotton Tie Co. *v.* Simmons, 106 U. S. 89 325
Coughlin *v.* District of Columbia, 106 U. S. 7 597
Craig *v.* Sibbett, 15 Penn. St. 238 559
Crapo *v.* Allen, 1 Sprague, 185 206
Cromwell *v.* Sac County, 94 U. S. 351 691
Cross *v.* Guthery, 2 Root, 90; *S. C.* 1 Am. Dec. 61 204, 205
Culver *v.* Reno Real Estate Co., 91 Penn. St. 367 309
Cutting *v.* Seabury, 1 Sprague, 522 206, 210
Daniel Washburn, 4 Johns. Ch. 106; *S. C.* 8 Am. Dec. 548 412
David Reeves (The), 5 Hughes, 89 208
Davies *v.* Penton, 6 B. & C. 216; *S. C.* 9 D. & R. 369 498
Davis *v.* Friedlander, 104 U. S. 570 453
Deery *v.* Cray, 5 Wall. 795 103
De Groot *v.* United States, 5 Wall. 419 479
Delaware Railroad Tax, 18 Wall. 206 277
Delmas *v.* Insurance Co., 14 Wall. 661 624
Dennick *v.* Railroad Co., 103 U. S. 11 204
Dent *v.* London Tramways Co., 16 Ch. Div. 344 309
Derby & Day *v.* Gallop, 5 Minn. 119 564
Dickinson *v.* Dodds, 2 Ch. D. 463 151
Dietrick *v.* Baltimore & Halls Spring Railroad, 58 Maryland, 347 106
Dixon County *v.* Field, 111 U. S. 83 225
Doe *v.* Childress, 21 Wall. 642 453
Double-Pointed Tack Co. *v.* Two Rivers Manufacturing Co., 109 U. S. 117 338
Dowell *v.* Mitchell, 105 U. S. 430 357
Dow's Case, 18 Penn. St. 37 444
Doyle *v.* Continental Insurance Co., 94 U. S. 535 118
Ducat *v.* Chicago, 10 Wall. 410 118, 125
Dugger *v.* Bocock, 104 U. S. 596 624
Dunham *v.* Chatham, 21 Texas, 241; *S. C.* 73 Am. Dec. 228 172
E. B. Ward, Jr. (The), 4 Woods, 145; *S. C.* 16 Fed. Rep. 255 210, 211
E. B. Ward, Jr. (The), 17 Fed. Rep. 456; 23 Fed. Rep. 900 211
Eliason *v.* Henshaw, 4 Wheat. 225 151
Elkins *v.* Camden Atlantic Co., 36 N. J. Eq. (9 Stewart) 233 308
Elliott *v.* Levings, 54 Ill. 213 90
Empire *v.* Darlington, 101 U. S. 87 693
Epsilon (The), 6 Ben. 379 210
Escanaba Co. *v.* Chicago, 107 U. S. 678 284, 546
Estey *v.* Burdett, 109 U. S. 633 338
Eyster *v.* Gaff, 91 U. S. 521 453
Fairfield *v.* County of Gallatin, 100 U. S. 47 691
Farrington *v.* Tennessee, 95 U. S. 679 277
Fidelity Insurance Co. *v.* Huntington, 117 U. S. 280 511
Field *v.* Thompson, 119 Mass. 151 102
50,000 Feet of Timber, 2 Lowell, 64 630
Finch *v.* Lamberton, 62 Penn. St. 370 513
Fisk, *Ex parte*, 113 U. S. 713 525
Fisk *v.* Gray, 11 Allen, 132 498
Fletcher *v.* Hamlet, 116 U. S. 408 513
Ford *v.* Monroe, 20 Wend. 210 205, 207
Forgay *v.* Conrad, 6 How. 201 164
Foster *v.* Neilson, 2 Pet. 253 418

Digitized by Google

PAGE
Fox *v.* Turner, 1 Bradwell, 153 151
Frasher *v.* O'Conner, 115 U. S. 102 330, 332, 333, 334
Freeman *v.* Howe, 24 How. 450 600
Gage *v.* Pumpelly, 108 U. S. 164 388
Gardner *v.* Herz, 118 U. S. 180 338
Garland (The), 5 Fed. Rep. 924 210
Gilman *v.* Higby, 110 U. S. 47 103
Gilman *v.* Philadelphia, 3 Wall. 713 282
Goodsell *v.* Hartford & New Haven Railroad, 33 Conn. 55 205
Gordon *v.* United States, 2 Wall. 561 (117 U. S. 697) 477, 479
Grace *v.* American Central Insurance Co., 109 U. S. 278 239
Grame *v.* Insurance Co., 112 U. S. 273 624
Grand Chute *v.* Winegar, 15 Wall. 373 234, 351
Grant *v.* Phœnix Insurance Co., 106 U. S. 429 54
Green *v.* Creighton, 23 How. 90 600
Green *v.* Hudson River Railroad, 2 Keyes, 294 205, 207
Gross *v.* United States Mortgage Co., 108 U. S. 477 116
Guldfaxe (The), 19 L. T. R. 748; *S. C.* L. R. 2 Ad. & Ecc. 325 210
Guy *v.* Mead, 22 N. Y. 465 102
Hagan *v.* Walker, 14 How. 28 600
Hall *v.* Macneale, 107 U. S. 90 338
Halleck *v.* Mixer, 16 Cal. 574 565
Hamilton *v.* Vicksburg, Shreveport, &c., Railroad Company, 119 U. S. 280 548
Hancock *v.* Holbrook, 112 U. S. 229 239, 342, 472
Hanley *v.* Donoghue, 116 U. S. 1 623
Hanover Railroad Co. *v.* Coyle, 55 Penn. St. 396 108
Hanrick *v.* Hanrick, 54 Texas, 101 167
Hanrick *v.* Hanrick, 61 Texas, 506 169
Hanrick *v.* Hanrick, 63 Texas, 618 169
Hapgood *v.* Hewitt, 11 Bissell, 184 233
Harlan *v.* Harlan, 15 Penn. St. 507; *S. C.* 53 Am. Dec. 612 565
Harris *v.* Equitable Assurance Society, 64 N. Y. 196 502
Harris *v.* Wall, 7 How. 692 524
Hartshorn *v.* The Eagle Shade Roller Co., 18 Fed. Rep. 90 673
Hastings *v.* Jackson, 112 U. S. 233 584
Haven *v.* Wendell, 11 N. H. 112 102
Hawker *v.* Baltimore & Ohio Railroad, 15 West Va. 628 106
Head Money Cases, 112 U. S. 580 418
Hecht *v.* Boughton, 105 U. S. 235 237
Hennequin *v.* Clews, 111 U. S. 676 98, 99
Hennies *v.* The People, 70 Ill. 100 401
Hermann *v.* New Orleans & Carollton Railroad, 11 La. Ann. 5 213
Hess *v.* Reynolds, 113 U. S. 73 467, 468
Hibbs, *Ex parte*, 26 Fed. Rep. 421 426
Higgins *v.* Johnson, 20 Texas, 389; *S. C.* 70 Am. Dec. 394 172
Highland Light (The), Chase's Dec. 150 207
Hill *v.* Tucker, 13 How. 458 600
Hine (The) *v.* Trevor, 4 Wall. 555 397, 399
Hipp *v.* Babin, 19 How. 271 351
Hitz *v.* National Metropolitan Bank, 111 U. S. 722 172
Hoffman *v.* Bank of Milwaukee, 12 Wall. 181 556
Holland *v.* Chambers, 110 U. S. 59 467
Hollister *v.* Benedict Manufacturing Co., 113 U. S. 59 338
Holmes, *Ex parte*, 12 Vt. 631 414
Holmes *v.* Jennison, 14 Pet. 540 412
Holmes *v.* Oregon and California Railway, 6 Sawyer, 202; *S. C.* 5 Fed. Rep. 75 209
Hornthall *v.* Collector, 9 Wall. 560 239
Horsburg *v.* Baker, 1 Pet. 232 354
Hubgh *v.* New Orleans, Carollton Railroad, 6 La. Ann. 495; *S. C.* 54 Am. Dec. 565 213
Hunter *v.* Wilson, 19 L. J. N. S. Exch. 8 559
Huse *v.* Glover, 11 Bissell, 550 546
Hyde *v.* Ruble, 104 U. S. 407 467, 511
Hyde *v.* Stone, 20 How. 170 600
Hyde *v.* Wrench, 3 Beavan, 334 151
Insurance Co. *v.* Bailey, 13 Wall. 616 351, 353
Insurance Co. *v.* Brame, 95 U. S. 756 204, 205, 207, 208
Insurance Co. *v.* Bruce, 105 U. S. 328 93
Insurance Co. *v.* Dunn, 19 Wall. 214 467
Insurance Co. *v.* Morse, 20 Wall. 445 125, 126, 127
Ives *v.* Sargent, 21 Blatchford, 417 659
James *v.* Campbell, 104 U. S. 356 52
James *v.* Christy, 18 Missouri, 162 205, 207
Jerome *v.* McCarter, 94 U. S. 734 453
Johnson *v.* McIntosh, 8 Wheat. 543 67
Johnson *v.* Stark County, 24 Ill. 75 694
Jones *v.* Bolles, 9 Wall. 364 352
Kansas & Pacific Railroad *v.* Pointer, 9 Kan. 620 106
Kellogg *v.* Union Co., 12 Conn. 7 549
Kelsea *v.* Fletcher, 48 N. H. 282 102
Keystone Bridge Co. *v.* Phœnix Iron Co., 95 U. S. 274 52
Killian *v.* Ebbinghaus, 110 U. S. 568 351

Digitized by Google

PAGE
King v. Cornell, 106 U. S. 395 467
King v. Gallun, 109 U. S. 99 338
King v. Worthington, 104 U. S. 44 525
Kuhl v. Mueller, 21 Fed. Rep. 510 406
Lafayette Insurance Co. v. French, 18 How. 404 118, 126
Lake Shore, &c., Railway Co. v. Car Brake Co., 110 U. S. 229 325
Lane v. Bryant, 9 Gray, 245; S. C. 69 Am. Dec. 282 106
Langford v. United States, 101 U. S. 341 479
Latham v. Smith, 45 Ill. 25 89
Lawrence v. Barker, 5 Wend. 305 102
Leather v. Simpson, 11 L. R. Eq. 398 559
Lebanon National Bank v. Karmany, 98 Penn. St. 65 361
Leon v. Galceran, 11 Wall. 185 398
Lessee of Brown v. Galloway, Pet. C. C. 291 525
Lessee of Penns v. Ingraham, 2 Wash. C. C. 487 525
Lewis v. Cocks, 23 Wall. 466 351
Lewis v. Commissioners, 105 U. S. 739 225
Lightner v. Wike, 4 S. & R. 203 102
Litchfield v. Ballou, 114 U. S. 190 352
Little v. Herndon, 10 Wall. 26 172
Liverpool Insurance Co. v. Massachusetts, 10 Wall. 506 118
Lockhart v. Van Alstyne, 31 Mich. 76 309
Long Island North Shore Passenger, &c., Co., 5 Fed. Rep. 599 209
Looney v. District of Columbia, 113 U. S. 258 341
Lopez & Sattler's Case, 1 Dearsly & Bell's Crown Cases, 525 444
Louisiana State Lottery Co. v. New Orleans, 24 La. Ann. 86 271
Louisiana State Lottery Co. v. Richoux, 23 La. Ann. 743 271
Louisville & Nashville Railroad v. Ide, 114 U. S. 52 511
Luby v. Hudson River Railroad, 17 N. Y. 131 106, 560
Mac (The), 7 P. D. 126 630
McClure v. Township of Oxford, 94 U. S. 429 216, 224
McClurg v. Kingsland, 1 How. 202 233
McDonogh v. Millaudon, 3 How. 693 614
McGarrahan v. Mining Co., 96 U. S. 316 449
McHenry v. La Société Française, 95 U. S. 58 453
McIntyre v. Trumbull, 7 Johns. 35 463, 464
Mackey v. Coxe, 18 How. 100 600
McReynolds v. Smallhouse, 8 Bush, 447 549
McStay v. Friedman, 92 U. S. 723 584
Mahn v. Harwood, 112 U. S. 354 661, 662
Manhasset (The), 18 Fed. Rep. 918 211
Mansfield, Coldwater, &c., Railway v. Swann, 111 U. S. 379 239, 471
Martin v. The People, 87 Ill. 524 687, 690
Mather v. Trinity Church, 8 S. & R. 509; S. C. 8 Am. Dec. 663 565
Maxcy v. Williamson County, 72 Ill. 207 90
Mays v. Fritton, 20 Wall. 414 453
Merrill v. Ithaca & Oswego Railroad, 16 Wend. 586; S. C. 30 Am. Dec. 130 102
Michigan Central Railroad v. Coleman, 28 Mich. 440 106
Middleton v. McGrew, 23 How. 45 170
Miller v. Brass Company, 104 U. S. 350 52, 673
Mills v. Duryee, 7 Cranch, 481 622
Mims v. Sturdevant, 36 Ala. 636 102
Mitchell v. Overman, 103 U. S. 62 596
Mobile & Montgomery Railroad v. Ashcroft, 48 Ala. 15 106
Monaghan v. Horn, *In re* The Garland, 7 Canada Sup. Ct. 409 212
Moore v. Huntington, 17 Wall. 417 401
Moores v. National Bank, 104 U. S. 625 103
Morgan v. Gay, 19 Wall. 81 240
Morgan v. Louisiana, 118 U. S. 455 400
Morris v. McMillin, 112 U. S. 244 338
Moses Taylor (The), 4 Wall. 411 397, 399
Mower v. Fletcher, 114 U. S. 127 55
Munn v. Illinois, 94 U. S. 113 400
Munroe v. Bordier, 8 C. B. 862 559
Murdock v. Memphis, 20 Wall. 590 116
Mussina v. Cavazos, 6 Wall. 355 614
National Bank v. Commonwealth, 9 Wall. 353 279
National Bank v. Graham, 100 U. S. 699 370
National Bank v. Hall, 101 U. S. 43 151
Newham v. May, 13 Price, 749 352
New Jersey Central Railroad v. Mills, 113 U. S. 249 243, 244
New York Guaranty Co. v. Memphis Water Co., 107 U. S. 205 352
New York Life Insurance Co. v. Hendren, 98 U. S. 286 624
Newton v. Furst & Bradley Manufacturing Co., 11 Bissell, 405 382
Norton, *Ex parte*, 108 U. S. 237 55
Odes v. Woodward, 2 Ld. Raymond, 766; S. C. 1 Salk. 87 603

Digitized by Google

PAGE
Ogden *v.* Maxwell, 3 Blatchford, 319 463, 464
Oliver *v.* Rumford Chemical Works, 109 U. S. 75 234
Orr *v.* Hodgson, 4 Wheat. 453 165
Osterman *v.* Baldwin, 6 Wall. 116 169
Owens *v.* Davis, 15 La. Ann. 22 650
Packet Co. *v.* Catlettsburg, 105 U. S. 559 400, 550
Packet Co. *v.* Clough, 20 Wall. 540 105
Packet Co. *v.* Keokuk, 95 U. S. 80 550
Palmer *v.* Cuyahoga County, 3 McLean, 226 547
Palmer *v.* Hussey, 87 N. Y. 303 98
Palmer *v.* Rouse, 3 H. & N. 505 630
Pana *v.* Bowler, 107 U. S. 529 93, 693
Parish *v.* Hozey, 17 La. 578 650
Parkersburg *v.* Brown, 106 U. S. 487 352
Patapsco Insurance Co. *v.* Southgate, 5 Pet. 604 524, 525
Paul *v.* Virginia, 8 Wall. 168 117, 124, 125
Payne *v.* Hook, 7 Wall. 425 600
Pence *v.* Langdon, 99 U. S. 578 152
Pennoyer *v.* Neff, 95 U. S. 714 188
Pennsylvania Railroad *v.* Brooks, 57 Penn. St. 339 106
Pennsylvania Railroad Co. *v.* Locomotive Truck Co., 110 U. S. 490 338
Pennywit *v.* Eaton, 15 Wall. 382 399
People *v.* Curtis, 50 N. Y. 321 414
People *v.* Dutcher, 56 Ill. 144 93, 95
People *ex rel.* Peoria and Oquawka Railroad Co. *v.* County of Tazewell, 31 Ill. 147 693
Permoli *v.* New Orleans, 3 How. 589 546
Pettibone *v.* Derringer, 4 Wash. C. C. 215 525
Phillips *v* Detroit, 111 U. S. 604 338
Phillips *v.* Moore, 100 U. S. 208 169
Phœnix Insurance Co. *Ex parte*, 118 U. S. 610 397
Pirie *v.* Tvedt, 115 U. S. 41 511
Plummer *v.* Webb, 1 Ware, 75; 4 Mason, 380 205, 206
Plymouth (The), 3 Wall. 20 397
Plymouth Mining Co. *v.* Amador Canal Co., 118 U. S. 265 511
Pollard *v.* Hagan, 3 How. 212 546
Potter *v.* National Bank, 102 U. S. 163 525
Putnam *v.* Ingraham, 114 U. S. 57 509, 511
Raft of Spars (A), 1 Abbott's Adm. 485 630
Railroad Co. *v.* Harris, 12 Wall. 65 123
Railroad Co. *v.* McKinley, 99 U. S. 147 467
Railway Co. *v.* Whitton, 13 Wall. 270 123

PAGE
Redden *v.* Spruance, 4 Harr. (Del.) 265 102
Reynolds *v.* Waller, 1 Wash. Va. 164 502
Richardson *v.* Vermont & Massachusetts Railroad, 44 Vt. 613 310
Richmond (The), 9 Cranch, 102 435, 444
Roberts *v.* Burks, Litt. Sel. Cases, 411; *S. C.* 12 Am. Dec. 325 106
Robertson *v.* Cease, 97 U. S. 646 239, 240
Robinson *v.* Reynolds, 2 Q. B. 196 557
Robinson *v.* Sutter, 10 Bissell, 100; *S. C.* 8 Fed. Rep. 828 535
Robinson *v.* Sutter, 11 Fed. Rep. 798 536, 538
Robinson *v.* Tonge, 3 P. Wms. 398 603
Rockhold *v.* Rockhold, 92 U. S. 129 624
Rogers *v.* Durant, 106 U. S. 644 354
Rolland *v.* Gosse, 19 Sirey (Cour de Cassation), 269 313
Romie *v.* Casanova, 91 U. S. 379 584
Root *v.* Railway Co., 105 U. S. 189 325, 351
Royall, *Ex parte*, 117 U. S. 241 431, 586
Royall, *Ex parte*, 117 U. S. 254 586
Russell *v.* Ashley, Hemp. 546 525
Russell *v.* Clarke, 7 Cranch, 69 354
Russell *v.* Hudson River Railroad, 17 N. Y. 134 102
Rutherford *v.* Geddes, 4 Wall. 220 524
Sabriego *v.* White, 30 Texas, 576 169
St. Clair *v.* Cox, 106 U. S. 350 123
St. John *v.* Erie Railway Co., 22 Wall. 136 307
St. John *v.* Erie Railway Co., 10 Blatchford, 271 308
St. Louis, Iron Mountain, &c., Railroad *v.* Southern Express Co., 108 U. S. 24 55
St. Louis, &c., Railway *v.* Wilson, 114 U. S. 60 511
Salem Shade Roller Co. *v.* Harris, 18 Fed. Rep. 92 674
Salvor Wrecking Co. *v.* Sectional Dock Co., 3 Cent. Law J. 640 630
Samuel (The), 1 Wheat. 9 524
San Francisco *v.* Scott, 111 U. S. 768 624
Santa Clara County *v.* Southern Pacific Railroad Co., 118 U. S. 394 120
Saunders *v.* Gould, 4 Pet. 392 360
Schillinger *v.* Greenway Brewing Co., 21 Blatchford, 383 406
Schillinger *v.* Gunther, 14 Blatchford, 152 404
Schillinger *v.* Gunther, 17 Blatchford, 66 405

Digitized by Google

PAGE
Schollenberger, *Ex parte*, 96 U. S. 369 123
Scott, *Ex parte*, 9 B. & C. 446 444
Scott *v.* Kelly, 22 Wall. 57 453
Scott *v.* King, 7 Minn. 494 564
Sea Gull (The), Chase's Dec. 145; *S. C.* 2 L. T. R. 15 206, 207, 208, 210, 211
Segasie *v.* Piernas, 26 La. Ann. 742 648
Settegast *v.* Schrimpf, 35 Texas, 323 169
Seward *v.* The Vera Cruz, 10 App. Cas. 59 204, 205, 212
Sharp *v.* Riessner, 15 Fed. Rep. 919 237
Shepard *v.* Carrigan, 116 U. S. 593 541
Shepley *v.* Cowan, 91 U. S. 330 332
Sherlock *v.* City of Winnetka, 68 Ill. 530 693
Shipley *v.* Carroll, 45 Ill. 285 90
Shipman *v.* District of Columbia, 18 C. Cl. 291 148
Short *v.* Deacon, 10 S. & R. 125 412
Slawson *v.* Grand Street Railroad Co., 107 U. S. 649 338
Slim *v.* Croucher, 1 D. F. & J. 518 352
Sloane *v.* Anderson, 117 U. S. 275 511
Smith, *Ex parte*, 94 U. S. 455 239
Smith *v.* Chapman, 93 U. S. 41 593
Smiths *v.* Shoemaker, 17 Wall. 630 103
Spooner *v.* McConnell, 1 McLean, 337 549
Stacy *v.* Thrasher, 6 How. 44 600
Starin *v.* New York, 115 U. S. 248 476, 511
State *v.* Brewster, 7 Vt. 118 444
State *v.* Rawle, 2 Nott & McCord, 331 102
State *v.* Ross & Mann, 21 Iowa, 467 444
State *v.* Smith, 1 Bailey, So. Car. Law. 283; *S. C.* 19 Am. Dec. 679 444
State *v.* Vanderpoel, 39 Ohio St. 273 429
Steamboat Co. *v.* Chase, 16 Wall. 532 208
Stephenson *v.* Brooklyn Railway Co., 114 U. S. 149 340
Stone *v.* Mississippi, 101 U. S. 814 274, 275
Strader *v.* Graham, 10 How. 82 546
Sullivan *v.* Union Pacific Railroad, 3 Dillon, 334 205, 208
Suydam *v.* Broadnax, 14 Pet. 67 600
Sylvan Glen (The), 9 Fed. Rep. 335 210
Taft *v.* Hartford, Providence, &c., Railroad, 8 R. I. 310 308
Tapley *v.* Goodsell, 122 Mass. 176 602
Tarver *v.* Keach, 15 Wall. 67 624
Taylor *v.* Carryl, 20 How. 583 398

PAGE
Tennessee *v.* Whitworth, 117 U. S. 129 277
Thames Bank *v.* Lovell, 18 Conn. 500; *S. C.* 46 Am. Dec. 332 549
Thayer *v.* Life Association, 112 U. S. 717 239, 471
Thetis (The), 3 Hagg. Adm. 14 628
Thiedeman *v.* Goldschmidt, 1 De Gex. F. & J. 4 559
Thompson *v.* Barclay, 9 Law Journal (Ch.), 215 352
Thompson *v.* Boisselier, 114 U. S. 1 338
Thompson *v.* Hudson, L. R. 4, H. L. 1 498
Thompson *v.* True, 48 Cal. 601 583
Thomson *v.* Wooster, 114 U. S. 104 323, 325, 326
Tome *v.* 4 Cribs of Lumber, Taney's Dec. 533 636
Towanda (The), 34 Leg. Int. (Philadelphia) 394; *S. C.* 5 Cent. Law Journ. 418 207
Town of Concord *v.* Portsmouth Savings Bank, 92 U. S. 625 691
Transportation Co. *v.* Parkersburg, 107 U. S. 691 400, 550
Troy Iron & Nail Factory *v.* Corning, 14 How. 193 234
Turner *v.* Bank of North America, 4 Dall. 8 239
Tyler *v.* Houghton, 25 Cal. 26 584
Union Bank *v.* Jolly, 18 How. 503 600
Union Pacific Railroad *v.* United States, 99 U. S. 402 308
United States *v.* Alire, 6 Wall. 573 479
United States *v.* Bailey, 9 Pet. 267 360
United States *v.* Caldwell, 8 Blatchford, 131 424, 425
United States *v.* Kagama, 118 U. S. 375 27
United States *v.* Lawrence, 13 Blatchford, 295 425
United States *v.* O'Grady, 22 Wall. 641 479
United States *v.* Railroad Co., 17 Wall. 322 279
United States *v.* Railroad Co., 105 U. S. 263 237
United States *v.* Rauscher, 119 U. S. 407 443
United States *v.* Thompson, 93 U. S. 586 624
United States *v.* Watts, 8 Sawyer, 370 426
Van Allen *v.* Assessors, 3 Wall. 573 277
Van Cott *v.* Van Brunt, 82 N. Y 535 345
Vannever *v.* Bryant, 21 Wall. 41 467
Van Renssalear *v.* Kearney, 11 How. 297 175

Digitized by Google

PAGE
Vinton *v.* Hamilton, 104 U. S. 485 380
Virginia & Tennessee Railroad *v.* Sayers, 26 Gratt. 328 106
Wales *v.* Whitney, 114 U. S. 564 586
Ward *v.* Armstrong, 6 McLean, 44 525
Warren *v.* King, 108 U. S. 389 308
Warren County *v.* Marcy, 97 U. S. 90 692
Waterville *v.* Van Slyke, 116 U. S. 699 360, 361
Watson *v.* Sutherland, 5 Wall. 74 352
Watts *v.* Camors, 115 U. S. 353 498
Weems *v.* Mathieson, 4 Macqueen, 215 212
Weeth *v.* New England Mortgage Co., 106 U. S. 605 360, 361
Welch *v.* Post, 99 Ill. 471 686, 692
West Tennessee Bank *v.* Citizens' Bank, 13 Wall. 432 624
White *v.* Brocaw, 14 Ohio St. 339 176
Whitehurst *v.* Coleen, 53 Ill. 247 401
Whitford *v.* Clark County, 13 Fed. Rep. 837 523
Whiting *v.* Graves, 3 Bann. & Ard. 222 233
Wilkins *v.* Spafford, 3 Bann. & Ard. 274 234
Williams *v.* Benedict, 8 How. 107 600
Williston *v.* Michigan Southern Railroad, 13 Allen, 400 308
Witkouski *v.* Witkouski, 16 La. Ann. 232 650
Wollensak *v.* Reiher, 115 U. S. 96 661, 662
Woolf *v.* Hamilton, 108 U. S. 15 237
Worcester *v.* Georgia, 6 Pet. 515 27
Yale Lock Manufacturing Co. *v.* Sargent, 117 U. S. 554 338
Yonley *v.* Lavender, 21 Wall. 276 600
Yulee *v.* Vose, 99 U. S. 539 467, 511, 512
Zeigler *v.* Hopkins, 117 U. S. 683 388
Zimmermann *v.* Lamb, 7 Minn. 421 564

Digitized by Google

Digitized by Google

TABLE OF STATUTES

CITED IN OPINIONS.

(A.) Statutes of the United States.

		PAGE
1787, July 13,	1 Stat. 51, (a) Government of Northwest Territory,	545, 546, 547
1789, Sept. 24,	1 Stat. 82, Judiciary	351, 399, 524
1789, Sept. 29,	1 Stat. 21, 98, Amendments to Constitution	351
1811, Feb. 20,	2 Stat. 642, Territory of Orleans	284
1812, April 8,	2 Stat. 701, Louisiana admitted as a state	284
1817, March 3,	3 Stat. 366, Settlement of public accounts	480
1841, Sept. 24,	5 Stat. 455, California. Public lands	582, 584
1841, Sept. 4,	5 Stat. 543, Land subject to preëmption	328, 330
1842, Aug. 23,	5 Stat. 513, Choctaw Indians	31, 43
1848, Aug. 12,	9 Stat. 302, Apprehension, etc., of offenders under treaties	415
1852, July 21,	10 Stat. 19, Appropriations: Indians	26, 30, 43
1853, March 3,	10 Stat. 244, California lien lands	328
1854, Aug. 3,	10 Stat. 346, Public lands: fee simple to pass in grants to states	331
1861, March 2,	12 Stat. 238, Indian appropriation	27, 33, 34, 41
1864, June 30,	13 Stat. 223, Internal Revenue	279
1864, July 1,	13 Stat. 332, Settlement of land titles in California,	333, 334
1864, July 2,	13 Stat. 365, Northern Pacific Railroad land grant	66
1864, July 4,	13 Stat. 381, Court of Claims	478, 479, 480
1866, March 17,	14 Stat. 9, Court of Claims	478, 479
1866, July 23,	14 Stat. 218, Land titles in California quieted,	329, 333, 582
1866, July 27,	14 Stat. 306, Removals	511
1867, March 2,	14 Stat. 541, Relief of inhabitants of towns upon public lands	528
1869, March 3,	15 Stat. 337, Extradition of criminals under treaties,	415, 426, 433
1871, March 3,	17 Stat. 579, Revision of Treaties with Indians	27
1872, June 7,	17 Stat. 281, Dakota Territory. Act to quiet title to lands	69
1874, April 7,	18 Stat. 27, Territorial courts, practice	236
1874, June 6,	18 Stat. 62, Land in Missouri released to owners of equitable titles	446
1874, June 23,	18 Stat. 230, Appropriations, Choctaw Indians	34, 35
1875, March 3,	18 Stat. 437, Removals	123, 467, 468, 475, 512

Digitized by Google

PAGE

1875, March 3, 18 Stat. 476, Boundary between Arkansas and Indian Territory 41
1875, March 3, 18 Stat. 481, Judgment recovered against United States, how reduced 480
1881, March 3, 21 Stat. 504, Jurisdiction given Court of Claims to ascertain amount due Choctaw Nation 26, 29, 31, 35
1885, March 3, 23 Stat. 437, Appeals to Supreme Court from Circuit Court, cases of *habeas corpus* 586
1885, March 3, 23 Stat. 443, Appeal to Supreme Court from Supreme Courts of Territories 386
1886, Aug. 4, 24 Stat. 256, 282, Appropriations, judgments of Court of Claims 480
Revised Statutes, § 236. Claims against United States to be settled in Treasury Department 479
§ 639. Removals 467, 468, 587
§ 643. Removals. Suits against revenue officers 460
§ 711. District Courts. Jurisdiction 399, 453
§ 723. Judiciary 351
§ 863. Deposition *de bene esse* 523, 525
§ 865. Deposition *de bene esse*, when not to be used 524, 525
§ 891. Evidence. Copies of records in General Land Office 449
§ 997. Removal of causes by writ of error 615
§ 1089. Judiciary. Payment of judgments 480
§ 2079. Indians: no future treaties 27
§ 2257. Public lands. Preëmption 70
§ 2325. Public lands. Mineral lands 486
§ 2326. Public lands. Mineral lands 486
§ 2387. Public lands occupied as town sites 528
§ 2449. Public lands 331
§ 2630. Collectors of Customs may employ deputies 462
§ 5108. Bankruptcy. Application for discharge 98
§ 5117. Bankruptcy. Certain debts not released 98
§ 5119. Bankruptcy. Certificate of discharge 98
§ 5270. Extradition. Fugitives from justice 415
§ 5272. Extradition. Surrender of fugitive 415, 423
§ 5275. Extradition. Protection of the accused..415, 423, 433, 434, 436
§ 5339. Crimes. Murder 409, 410
§ 5347. Crimes. Maltreatment of crew by officers 409, 410

(B.) TREATIES.

1820, Oct. 18, 7 Stat. 210, Choctaw Indians 36, 41
1825, Jan. 20, 7 Stat. 234, Choctaw Indians 36
1830, Sept. 27, 7 Stat. 333, Choctaw Nation 26, 30, 31, 32, 33, 35, 37, 38, 40, 43, 44
1842, Aug. 9, 8 Stat. 576, Great Britain 410, 415, 416, 417, 419, 424, 425, 426, 427, 428, 429, 443
1843, Nov. 9, 8 Stat. 580, France 427

Digitized by Google

PAGE

1855, June 22, 11 Stat. 611, Boundary between United States and Choctaw Nation 26, 28, 29, 30, 31, 32, 34, 35, 39, 40, 41, 42, 43
1867, Feb. 19, 15 Stat. 505, Sisseton and Wahpeton Indians 68, 69
1874, July 27, 18 Stat. 719, Peru 439, 443

(C.) STATUTES OF THE STATES AND TERRITORIES.

Arkansas, Mansfield's Digest, § 3346. } Forcible entries and detainers 609, 610
§ 3347. § 3368. } Forcible entries and detainers 610
California, Gen. Stat. 1850–64, 5828, § 120. } Claims against estate of decedent 598
5944, § 246. Claims against estate of decedent 598
5977, § 279. Discharge of executor 599
Political Code, § 3314. } Contest concerning survey 582
Illinois, 1867, Feb. Illinois River 544
1867, Feb. 25. Illinois South-eastern Railway ... 682, 683, 684, 687
1867, March 8. Edgar County Land and Loan Company, 696
1869, March 15. Town of Enfield 681
1869, Feb. 24. Illinois South-eastern Railway 682, 683, 684, 687, 690, 691
1869, March 26. Town of Lake 688
1869, March 30. Ogle & Carroll County Railroad 92, 94
1869, Feb. 20, Gross' Stat. 1, p. 750. } Election of town officers 90
1869, April 16, Gross' Stat. 1, 556. } Subscriptions by towns to railroad companies 91
1872, March 7. Tolls for use of locks on Illinois River, 544
1872, April 10. Incorporation of cities and villages, 687, 689
Rev. Stat. 1845, 111. } Corporations, Towns 688
Rev. Stat. 1874, 1067. } Townships 688, 689
Rev. Stat. 1881, 159. } Attachment of water craft 398, 401
Kansas, 1872, March 1. } Oxford Township and Oxford Bridge Company 216, 217, 219, 221, 222, 223, 224
1872, March 2. Bridge and improvement bonds .. 219, 220, 221, 222, 223, 224, 225, 226
Louisiana, 1842, March 5. Sequestration 649, 650, 651
1868, June 11. Louisiana State Lottery Company 266, 268, 269, 270, 271, 272, 274

Digitized by Google

			PAGE
La. (*cont.*),	1879, March 27.	Louisiana State Lottery Company	269, 273, 274
	1880, April 9.	Annual Revenue	267, 268, 276, 277, 278, 280
	Code of Practice, § 268.	Sequestration	646
	§ 270.	Sequestration	649, 650
	§ 271.	Sequestration	647
	§ 275.	Sequestration	647, 649
	§ 279.	Sequestration	645, 647, 648, 651
	§ 280.	Sequestration	645, 647, 648, 650
	§ 281.	Sequestration	647, 648
	1808. Code, Book III, Tit. XI.	Deposit and Sequestration	649
	1825. Code, Book III, Tit. XIII.	Deposit and Sequestration	649
	1870. Rev. Civil Code, Art. 2940. Art. 2975.	Deposit and Sequestration	649
	Civil Code, § 2207.	When compensation takes place	648
Minnesota,	1878. ch. 77, p. 826.	Unpaid creditors of decedent, action against legatees	601
Missouri,	Rev. Stat., § 3826.	Recording patents for lands	447
	§ 3827.	Copies of patents recorded, evidence	447
Montana,	Code of Civil Procedure, § 354.	Action by person in possession of real property	488
New York,	1853, June 25.	Foreign insurance companies,	119, 122, 124
	1862, Feb. 15.	Fire insurance companies	122
	1862, April 19.	Fire insurance companies	122
	1865, May 11.	Foreign insurance companies	117, 119, 123, 124, 127
	1871, May 3.	Fire insurance companies	122
	1874, May 6.	Fire insurance companies	122
	1874, May 11.	Reorganization of railroads, sold under mortgage	302
	1875, March 20.	Foreign insurance companies	119
	1875, June 9.	Foreign insurance companies	122
	1876, June 2.	Reorganization of railroads, sold under mortgage	302, 305
North Carolina,	1868, Aug. 14, § 8.	Counties. Removal of county buildings	180, 181
	1877, Feb. 27.	Government of counties	181, 183, 184
	Battle's Revisal, 1873, c. 27, § 8.	Removal of county buildings	180
Oregon,	1856, Dec. 17.	Willamette Woollen Manufacturing Company	192, 194
	1880, Oct. 21.	Civil disabilities of a wife	642
Pennsylvania,	1830, April 6.	Suits against coöbligors, etc.	510

Digitized by Google

			PAGE
Penn. (*cont.*),	1842, Aug. 2.	Judgments against co-defendants at different periods	510
	1873, April 4.	Foreign insurance companies	117, 128
	1877, April 4.	Judgment by default against one or more of several co-defendants	510
Texas,	1840, Jan. 28.	Decedents' estates	164, 168, 169
	1848, March 18.	Decedents' estates	164, 167, 168, 170
	1854, Feb. 13.	Civil rights of aliens	165, 166, 167, 168, 169, 170
	Rev. Stat. 1879, Art. 1188.	Pleadings of an intervenor	162
	Art. 4788.	Action of ejectment	162
Utah,	Compiled Laws, 1876, § 1226.	Civil actions, practice	501
	§ 1247.	Civil actions, how commended	501
	§ 1263.	Civil actions, pleadings	501
	§ 1374.	Civil actions, judgments	501
Virginia,	1778, c. 28.	Vacancies among trustees of towns not incorporated, how filled	685
	1793.	Electors of towns	685
	Rev. Code, 1819, II, 319.	Powers of trustees of unincorporated towns	685
	Rev. Code, 1849, 283.	Towns	685

(D.) Foreign Statutes.

France,	Code Napoléon, Liv. III, Tit. XI.	Du Dépôt et du sequestre	649
Great Britain,	1677, 29 Car. II. c. 3.	Judgments at Common Law	603
	1846, 9 & 10 Vict. c. 93.	Action for injury which results in death	204, 205
	1854, 17 & 18 Vict. c. 104.	Merchant Shipping	629
	1870, 33 & 34 Vict. c. 14.	Legal condition of aliens and British subjects	166, 167, 169
	1870, 33 & 34 Vict. c. 52.	Extradition	416

Digitized by Google

Digitized by Google

CASES ADJUDGED

IN THE

SUPREME COURT OF THE UNITED STATES,

AT

OCTOBER TERM, 1886.

CHOCTAW NATION *v.* UNITED STATES.

UNITED STATES *v.* CHOCTAW NATION.

APPEALS FROM THE COURT OF CLAIMS.

Argued October 19, 20, 21, 1886.—Decided November 15, 1886.

The relations between the United States and the Indian tribes, being those of a superior towards an inferior who is under its care and control, its acts touching them and its promises to them, in the execution of its own policy and in the furtherance of its own interests, are to be interpreted as justice and reason demand in cases where power is exerted by the strong over those to whom they owe care and protection. *United States* v. *Kagama,* 118 U. S. 375, cited and applied.

The Act of March 3, 1881, 21 Stat. 504, authorizing the Court of Claims "to take jurisdiction of and try all questions of difference arising out of treaty stipulations with the Choctaw nation, and to render judgment thereon," and granting it power to review the entire question of differences de novo, and providing that "it shall not be estopped by any action had or award made by the Senate of the United States in pursuance of the Treaty of 1855," denied to that award conclusive effect as *res judicata,* but did not set it aside, or deny to it, effect as prima facie evidence of the validity of the claims adjudged by it. The act operated to reopen that award and the questions decided by it so far as to cast upon the United States, in the trial in the Court of Claims, the burden of disproving the justice and fairness of the award.

By the terms of the submission in the Treaty of June 22, 1855, 11 Stat. 611,

Digitized by Google

under which the Senate acted as arbitrator of the differences between the United States and the Choctaws, it was clearly submitted to that body to determine whether, under all the circumstances, and as a matter of justice and fair dealing, the Choctaws ought to receive the proceeds of the sale of the lands ceded by them to the United States by the Treaty of September 27, 1830, 7 Stat. 333, whether as deducible from the terms of the treaty, or as a just compensation to be awarded to them for its breaches. The delegation by the Senate to the Secretary of the Interior to ascertain and report the detailed sums due the Choctaws upon the principles settled by the award was within the powers conferred upon that body by the terms of the submission. No notice to the United States was necessary of the intention of the Senate to proceed as arbitrator under the submission. And the whole proceedings were ratified and confirmed by the United States by the Acts of March 2, 1861, 12 Stat. 238; and of June 23, 1874, 18 Stat. 230.

The award of the Senate upon the differences between the Choctaws and the United States submitted to it under the provisions of the Treaty of June 22, 1855, furnishes the nearest approximation to the justice and right of the case that, after the lapse of time, it is practicable for a judicial tribunal to reach; and, not being affected by any of the facts found by the Court of Claims, is taken by this Court as the basis of its judgment on the subjects in dispute in this case, which arose prior to the treaty of 1855, and were passed upon in the award. In addition to the amount of that award, the Choctaw nation is entitled to further sums, (1) for unpaid annuities; and (2) for land taken from them in locating the boundary of Arkansas under the Act of March 3, 1875, 18 Stat. 476.

The following is the case as stated by the court:

There are two appeals in this case, one by the Choctaw Nation, and the other by the United States, from a judgment rendered by the Court of Claims in favor of the former for the sum of $408,120.32. Jurisdiction of the cause was conferred upon that court by the provisions of an act of Congress approved March 3, 1881, 21 Stat. 504, entitled "An act for the ascertainment of the amount due the Choctaw Nation," as follows:

"That the Court of Claims is hereby authorized to take jurisdiction of and try all questions of difference arising out of treaty stipulations with the Choctaw Nation, and to render judgment thereon; power is hereby granted the said court to review the entire question of differences *de novo*, and it shall not be estopped by any action had or award made by the

Digitized by Google

Senate of the United States in pursuance of the treaty of eighteen hundred and fifty-five; and the Attorney General is hereby directed to appear in behalf of the Government; and if said court shall decide against the United States, the Attorney General shall, within thirty days from the rendition of judgment, appeal the cause to the Supreme Court of the United States; and from any judgment that may be rendered the said Choctaw Nation may also appeal to said Supreme Court: *Provided*, The appeal of said Choctaw Nation shall be taken within sixty days after the rendition of said judgment, and the said courts shall give such cause precedence.

"Sec. 2. Said action shall be commenced by a petition stating the facts on which said nation claims to recover, and the amount of its claim; and said petition may be verified by either of the authorized delegates of said nation as to the existence of such facts, and no other statements need be contained in said petition or verification."

In pursuance of this act, the Choctaw Nation filed its original petition on the 13th of June, 1881, which was subsequently amended by new pleadings filed February 26, 1884. The questions of difference between the United States and the petitioner, it was alleged, resulted from the non-performance and non-fulfilment by the United States of the obligations assumed by it under various treaties between the United States and the Choctaw Nation, including those of the following dates, to wit: the 18th day of October, 1820, the 20th day of January, 1825, the 27th day of September, 1830, the 22d day of June, 1855, and the 28th day of April, 1866.

By the terms of the treaty of October 18, 1820, 7 Stat. 210, it was provided, amongst other things, that the Choctaw Nation did cede to the United States all that part of its lands situated in the State of Mississippi described in the 1st article of the treaty, in consideration whereof the United States stipulated that in part satisfaction for the said cession the United States ceded to the Choctaw Nation a tract of country west of the Mississippi River, situated between the Arkansas and Red Rivers, the boundaries of which were therein described; and also that the boundaries thereby established between the

Digitized by Google

Choctaw Indians and the United States, east of the Mississippi River, should remain without alteration until the period at which the nation should become so civilized and enlightened as to be made citizens of the United States. It was agreed that Congress should lay off a limited parcel of land for the benefit of each family or individual in the nation; that all those who had separate settlements falling within the limits of the land ceded by the Choctaw nation to the United States, and who desired to remain there, should be secured in a tract or parcel of land one mile square, to include their improvements; and that those preferring to remove within one year from the date of the treaty should be paid their full value, including the value of any improvements.

It is alleged in the petition that, by the treaties of January 20, 1825, 7 Stat. 234, of September 27, 1830, 7 Stat. 333, and of June 22, 1855, 11 Stat. 611, the boundary line between the lands of the United States and the Choctaws west of the Mississippi River was established, but that the United States, in fixing and causing to be surveyed the said boundary line, did not pursue the line in accordance with the provisions of the said treaties, but encroached upon and took from the lands ceded to the Choctaw Nation a quantity of land amounting to 136,204.02 acres, which by the legislation of the United States, in violation of these provisions of the treaties, became a part of the public domain of the United States, for which the Choctaw Nation are entitled to recover their value, estimated at $167,896.57.

The petition further states that, in the treaty concluded on the 27th September, 1830, called the Treaty of Dancing Rabbit Creek, it was provided, among other things, by the 3d article thereof, 7 Stat. 333, that the Choctaw Nation should and did thereby cede to the United States the entire country they then owned and possessed east of the Mississippi River, and agreed to remove beyond the Mississippi River as early as practicable; and that, in pursuance of this treaty the Choctaw Nation surrendered to the United States all the remaining lands at that time owned by them in the State of Mississippi, amounting, as is alleged, to 10,423,139 acres, and, in compliance with the

Digitized by Google

treaty on their part, commenced to remove, and did remove, within the time stipulated therein, or within a reasonable time thereafter, from the said lands to the lands purchased and acquired by them under the terms of the treaty of October 18, 1820.

By the 14th article of the treaty of September 27, 1830, it was provided that each Choctaw head of a family, being desirous to remain and become a citizen of the States, should be permitted to do so by signifying his intention to the agent within six months of the ratification of the treaty, and thereupon should be entitled to a reservation of one section of 640 acres of land, to be bounded by sectional lines of survey; and in like manner should be entitled to one half that quantity for each unmarried child living with him over ten years of age, and a quarter section for each child that might be under ten years of age, to adjoin the location of the parent. If they resided upon such lands, intending to become citizens of the States, for five years after the ratification of the treaty, a grant in fee simple should issue. Such reservation should include the present improvement of the head of the family, or a portion of it, and the persons who claimed under the article were not to lose the privilege of Choctaw citizenship.

It is alleged in the petition that 1585 heads of Choctaw families signified their intention to remain on their lands in Mississippi and become citizens under this article of the treaty; and that, although they substantially complied with all its requirements and conditions, and thereby became entitled to grants of land in fee simple, as specified in the article, yet but 143 such families ever received from the United States their title to the lands guaranteed them by the article, leaving 1442 of the said Choctaw heads of families entitled to a grant of their lands in fee simple, under the provisions of said article 14, whose claims had not been satisfied.

It is alleged in the petition that the lands to which these families were entitled amounted to 1,672,760 acres, which were reasonably worth, with the improvements, $5.50 an acre, and that the value of the whole was $9,200,180.

It is further alleged in the petition that the United States,

Digitized by Google

having failed to secure to each Choctaw head of a family the reservation secured under article 14 of the treaty of 1830, subsequently, by an act of Congress approved August 23, 1842, 5 Stat. 513, attempted to provide compensation for the same by the issue and delivery of certificates or scrip, which authorized those entitled to such reservations, or their assignees, to enter any of the public lands subject to entry at private sale in the States of Mississippi, Alabama, Louisiana, or Arkansas, which certificates or scrip they were required by said act to receive and accept in full satisfaction of all their claims or demands against the United States under said article 14.

It is further alleged in the petition that 292 of the 1442 Choctaw heads of families, entitled to grants in fee simple under article 14 of the treaty of 1830, have never received any such grants in fee simple, or any allowance or compensation whatever for the same. The claims of 1150 of said 1442 heads of families were adjudicated and allowed under the act of August 23, 1842, and certificates or scrip awarded to them under the provisions of said act, authorizing the entry of 1,399,920 acres of land, of which there were paid and delivered to the persons entitled to receive the same 3833 certificates or pieces of scrip, authorizing the entry of 700,080 acres of land. The certificates for the residue of said 1,399,920 acres, to wit, for 699,840 acres, were not issued, but were withheld under an act of Congress approved March 3, 1845, 5 Stat. 777, which provided that they should carry an interest of five per cent., payable to the claimants or their representatives, to be estimated upon $1.25 for each acre of land to which they were entitled. The aggregate amount, or principal sum, thus funded, amounting to $872,000, was afterwards, under an act of Congress approved July 21, 1852, 10 Stat. 19, paid in money to the claimants; which sum of $872,000 was included in the sum of $1,749,900 subsequently charged to the claimants in an account referred to hereafter, being for 1,399,920 acres of scrip, in lieu of reservations, at $1.25 per acre; of which sum of $1,749,900, $872,000 was paid as aforesaid in money, the residue, $877,900, being charged in said account for the certificates or scrip authorizing the entry of 700,080

Digitized by Google

acres of land, delivered as aforesaid to the said claimants; for which 700,080 acres in scrip the said claimants were charged at the rate of $1.25 per acre, although, by reason of the acts of the United States and its agents in delivering said scrip at places where it could not be used, the whole amount realized by the claimants was $118,400, and no more. So that the amount chargeable against the Choctaw Nation should have been the sum of $980,400, and is all that should be deducted from the $9,200,180, the estimated value of the lands for which they claim the right to recover in this proceeding.

It is further alleged that, by the 16th article of said treaty, the United States agreed to remove the Choctaws to their new homes; to furnish them with ample corn, beef, and pork for twelve months after reaching there; to take all of their cattle at an appraised value, and pay for the same in money; but it is alleged that, between 1834 and 1846, 960 members of the Choctaw Nation emigrated and subsisted for one year without assistance from the United States, for each of which 960 the Choctaw Nation is entitled to recover $54.16½ from the United States, making the total amount claimed $51,998.40.

It is further alleged that, under the provisions of article 19 of said treaty of 1830, four sections of land were reserved to Col. David Folsom, two of which should include his present improvement; two sections each were reserved to eight persons therein named, to include their improvements, and to be bounded by sectional lines, which might be sold with the consent of the President; and for others not otherwise provided for, there were reserved, 1st, one section to each head of a family, not exceeding forty, who had in actual cultivation fifty acres or more, with a dwelling-house thereon; 2d, three quarter-sections, after the manner aforesaid, to each head of a family, not exceeding 460, who had cultivated between thirty and fifty acres; 3d, one half-section, as aforesaid, to those, not to exceed 400, who had cultivated from twenty to thirty acres; 4th, a quarter-section to such, not to exceed 350, as had cultivated from twelve to twenty acres; and half that quantity to such as had cultivated from two to twelve acres, limited

Digitized by Google

to the same number; each class to be so located as to include the improvement containing the dwelling-house. These reservations might be sold with the consent of the President of the United States; but should any prefer it, or omit to take such reservation as he might be entitled to, the United States would, upon his removal and arrival at his new home, pay him fifty cents an acre therefor, provided proof of his claim be made before the 1st of January following.

It is further alleged that said article 19 intended to provide 458,400 acres for 1600 cultivators, yet in carrying out the treaty land was assigned to but 731, amounting in all to 123,-680 acres; that the actual number of cultivators of from two to twelve acres at the date of the treaty was 1763, instead of 350; that 1413, therefore, failed to get any land at all, owing to the limitations of said article 19; that while the treaty intended to provide reservations for 1600 cultivators, such reservations were assigned to only 731, although the number of actual cultivators was 2144; that the 1413 cultivators thus excluded contended that they were justly entitled to the same measure of compensation for their improvements as was allowed to other cultivators of equal grade, to wit, 80 acres to each, amounting to 113,040 acres, worth at that time $339,120; that of the 731 to whom were assigned lands as aforesaid, 143 had never received any land or other benefit intended to be secured by said article 19; 45 of whom relinquished to the United States 6400 acres of land and never received compensation therefor, and the remaining 98, to whom 15,520 acres of land were assigned, never had any land set apart for them; that the said 143 cultivators were entitled to 21,920 acres, worth the sum of $65,760.

It is further alleged that article 20 of said treaty of 1830 provided for each warrior who emigrated, a rifle, moulds, and ammunition; that 1458 warriors became entitled to the benefits of article 20, but they were never received by a large number who emigrated; that such articles were worth at that time $13.50 to each warrior, and that the whole amount claimed, by the failure of the United States to carry out the provision of said article 20, was $19,278.

Digitized by Google

It is further alleged that the act of Congress, making appropriation for the expenses of the Indian Department, and for fulfilling treaty stipulations with the various Indian tribes, for the year ending June 30, 1846, approved March 3, 1845, 5 Stat. 777, provided as follows:

"That of the scrip which has been awarded, or which shall be awarded, to Choctaw Indians under the provisions of the law of twenty third August, one thousand eight hundred and forty two, that portion thereof not deliverable East, by the third section of said law, in these words, 'not more than one-half of which shall be delivered to said Indian until after his removal to the Choctaw territory west of the Mississippi,' shall not be issued or delivered in the West, but the amounts awarded for land on which they resided, but which it is impossible for the United States now to give them, shall carry an interest of five per cent., which the United States will pay annually to the reservees under the treaty of one thousand eight hundred and thirty, respectively, or to their heirs and legal representatives forever, estimating the land to which they may be entitled at one dollar and twenty five cents per acre."

That the Choctaw heads of families and their children became entitled to receive scrip for 697,600 acres of land, valued at $872,000; that said Choctaw heads of families, their heirs and legal representatives, became entitled to interest thereon from March 3, 1845, but the United States refused to pay such interest unless the person entitled to receive it was at the date of the passage of said act settled in the Choctaw territory west of the Mississippi River, and also refused to pay such interest on scrip issued subsequent to March 3, 1845, until the beneficiary had removed to the Choctaw territory; that those persons for whose benefit the scrip was funded were entitled to interest on such funded scrip from March 3, 1845, until July 21, 1852, but the United States did not pay the interest on such funded scrip between those dates; and that the amount of such interest due from the United States was $305,551, but only $171,400.34 of interest was paid on such scrip, leaving due thereon $134,150.66.

Digitized by Google

It is further alleged that the Choctaw Nation, by the 4th article of the treaty of October 18, 1820, was secured in the right to occupy and enjoy forever the lands retained east of the Mississippi River, which were by the provisions of said article to be set apart to each family or member of the Choctaw Nation, when that nation should become so civilized and enlightened as to be made citizens of the United States; that the United States agreed, by the 7th article of the treaty of 1825, not to apportion said lands for the benefit of the Choctaw Nation but with the consent of that nation; that the legal effect of said article 4 of the treaty of 1820, and of article 7 of the treaty of 1825, was to secure to the heads of families and individual members of the Choctaw Nation a title in fee simple to all lands belonging to that nation not included in the cession made by the treaty of 1820, but that the United States having, by the treaty of 1830, disregarded the obligations of said articles 4 and 7, and having paid for said lands ceded by the Choctaw Nation, under the treaty of 1830, an inadequate consideration, the Choctaw Nation was entitled to be paid by the United States the whole amount of the proceeds resulting from the sale of said lands so ceded.

It is further alleged that the Choctaw Nation, by its legislative assembly, on November 9, 1853, created a delegation to settle all unsettled business with the United States; that on the 22d of June, 1855, the United States entered into a treaty with the Choctaw Nation to settle and adjudicate all matters of difference, claims, or demands of that nation, or individual members thereof; that subsequent to the ratification of said treaty by the United States, the Senate of the United States entered upon the examination and adjudication of the questions submitted to it by article 11 of that treaty, whereupon a statement of the claims and demands of the Choctaw Nation upon the United States, with supporting evidence, was presented to the Senate to enable it to give such claims a just, fair, and liberal consideration; that after consideration of such claims, the Senate, on the 9th of March, 1859, passed a resolution to allow the Choctaws the proceeds of the sale of such lands as had been sold by the United States on January 1,

Digitized by Google

1859, deducting therefrom the cost of survey and sale, and all proper expenditures and payments under the treaty of 1830, excluding the reservations allowed and secured, and estimating the scrip issued in lieu thereof at $1.25 per acre, and that they be allowed 12½ cents per acre for the residue of said lands.

It is further alleged that, in pursuance of said resolution, the Secretary of the Interior caused an account to be stated between the United States and the Choctaw Nation, showing that the United States were indebted to said nation, on account of the net proceeds of the lands ceded by the treaty of September, 1830, in the sum of $2,981,247.30.

It is also alleged that, under the treaty of June 22, 1855, 11 Stat. 611, in consideration of the claims heretofore stated, and of the cession and lease of 15,000,000 acres of land, valued at $2,225,000, the United States agreed that all the rights and claims of the Choctaw Nation, and the individuals thereof, and all matters in dispute, should receive a just, fair, and liberal consideration and settlement; that by virtue thereof the Choctaw Nation became entitled to a settlement of and payment for all their pending rights and claims, individual and national, free from all waivers or estoppels which might in equity have been interposed against them; and that, by virtue of article 11 of the treaty of June, 1855, and of the consideration paid to the United States therefor, the Choctaw Nation became entitled, by virtue of article 18 of the treaty of 1830, whenever well-founded doubts should arise, to have said treaty construed most favorably toward the Choctaws.

In said petition the Choctaw Nation prays that the award of the Senate of the United States be made final, and that the account stated by the Secretary of the Interior may be restated, in order that the balance due may be determined and the following errors corrected; that the proceeds of the lands sold up to January 1, 1859, and the residue then remaining unsold, at 12½ cents per acre, amounted to $8,413,418.61, instead of $8,078,614.80; that the actual cost of survey and sale was $256,387.74, instead of $1,042,313.96; that the sum of $120,826.76 for reservations to orphans was not deducted, included in or connected with the aggregate fund against which it is

Digitized by Google

charged in said account; that there should not have been deducted from said aggregate fund the payments made to meet contingent expenses of the commissioners appointed to adjust claims under the 14th article of the treaty of September, 1830, amounting to $51,320.79, nor the expenses growing out of the location and sale of Choctaw reservations, and perfecting titles to the same, amounting to $21,408.36; that the correction of the foregoing errors would show a balance payable to the Choctaw Nation, under the award of the Senate, of $4,295,-533.24, instead of $2,981,247.30, for which sum the Choctaw Nation prays judgment, after deducting $250,000 paid on account of said award under the act of March 2, 1861, and the further sum of $250,000 in bonds appropriated by said act; and also prays that interest be allowed on this latter sum at six per centum per annum from March 2, 1861, until paid.

It is further alleged that, under the act of Congress approved March 2, 1861, the Choctaw Nation became entitled to receive from the United States $250,000 in bonds bearing interest at six per centum per annum, as a payment on account of said award of the Senate of the United States; that the issue and delivery of said bonds was demanded by the Choctaw Nation in April, 1861, but said bonds were not and never have been issued and delivered to it, nor has it received from the United States any payment of money in lieu of said bonds; that said Choctaw Nation claims from the United States on account of said award the said sum of $250,000, with interest at six per centum per annum from the date when demand for said bonds was made until paid; that the claims of the Choctaw Nation against the United States, but for the adjudication thereof by the Senate, would amount to $8,432,349.78, for which the Choctaw Nation would be entitled to recover judgment, with interest at five per centum, from September 27, 1830; and that there remains due and payable to the Choctaw Nation from the United States on account of the award of the Senate, after deducting therefrom the said sum of $500,000, the sum of $3,795,533.24, on which the Choctaw Nation claims interest at five per centum per annum.

It is also alleged that, between July 1, 1861, and July 1,

Digitized by Google

1866, there became due from the United States to the Choctaw Nation, under various treaty stipulations made prior to July 1, 1861, the sum of $406,284.93, of which amount it is admitted the United States may legally retain $346,835.61, leaving a balance due of $59,449.32.

It is further alleged that the questions of difference existing between the Choctaw Nation and the United States result from the non-fulfilment of treaty stipulations, and relate exclusively to claims which can now only be satisfied by the payment of such sums as the United States ought under its treaties to pay to said Choctaw Nation, which are as follows: 1st, Claims upon the basis of the Senate award, and of the correctness of the account stated by the Secretary of the Interior May 8, 1860, amounting to $2,958,593.19, with interest on the balance due on the award of the Senate at five per cent., and on the bonds authorized by Congress at six per cent., until paid; 2d, Amount due under the award, after correcting errors in the account stated by the Secretary of the Interior, $4,272,879.13, to which add interest on balance due under the award of the Senate from March 9, 1859, at five per cent., and on bonds authorized by Congress from March 2, 1861, at six per cent., until paid; 3d, Amount claimed in case the award of the Senate, under article 11 of the treaty of June 22, 1855, should be set aside, $8,659,695.67, with interest on the 14th article claims of $7,808,668.80, from August 24, 1836, until paid; 4th, Claims of the Choctaw Nation against the United States, stated upon the principle that the United States retain the lands acquired by the treaty of September 27, 1830, in trust for the benefit of the Choctaw Nation, and, as trustee, are bound to account for the value of said lands, after deducting therefrom the amounts paid to the Choctaw Nation on account of said lands.

The petition further prays, that if none of the above methods of stating its claims against the United States are such as can be approved and sanctioned, and if the court may rightfully ignore the Senate award and examine the matter *de novo*, then the Choctaw Nation may be considered as having been required, in violation of the treaties of October, 1820, and

Digitized by Google

January, 1825, to cede to the United States the lands described in the treaty of September, 1830, and that the court will declare that the United States, from and after the treaty of September, 1830, held such lands as the trustee for the benefit of the Choctaw Nation, and were bound to account for the proceeds resulting from the sale thereof; that the court will ascertain the amount realized by the United States from the sale of such lands, and cause an account to be stated in respect thereto, and charge against the same the value of all payments on account of said lands by the United States; that upon such accounting a judgment may be rendered for the balance found due, with interest thereon; and that the Choctaw Nation have judgment for the amount of the annuities due to it from July 1, 1861, to July 1, 1866, amounting to $59,449.32, and also for the sum of $167,896.57, being the value of the lands taken from the Choctaw Nation by the United States in locating the western boundary of the State of Arkansas.

The United States, in addition to a general denial, filed a special plea, alleging that by the 14th article of the treaty of 1830 each Choctaw head of a family who desired to remain in Mississippi and become a citizen of the State was to be permitted to do so upon signifying his intention to the agent of the United States within six months from the ratification of the treaty, whereupon he should be entitled to a reservation of land including his improvement, and, should he live upon the land for five years thereafter, a grant in fee simple should issue to him. That within the six months 100 heads of Choctaw families signified their intention to remain and become citizens of the States and their names were registered. That on August 12, 1833, the ceded lands were directed to be sold, and an agent was appointed to locate the reservations of those intending to remain. That many who were not registered applied for reservations, but were not recognized, yet, it appearing that they had signified their intention in due time and been refused registry, the agent was directed to receive evidence and make provisional locations of lands the sale of which was suspended to await the action of Congress. That

Digitized by Google

commissioners were appointed to adjust the claims to reservations, and filed a report on June 16, 1845. That 143 heads of Choctaw families obtained reservations in the ceded territory, and 1155 other Choctaw heads of families were found to be entitled to the benefits of article 14 of the treaty, but the United States had disposed of the lands to which they would have been entitled, so that it was impossible to give said Indians the quantity to which they were severally entitled. Said commissioners thereupon estimated the quantity of land to which each of said Indians would be entitled and allowed him for the same quantity, to be taken out of any public lands in the States of Mississippi, Louisiana, Alabama, or Arkansas, subject to entry at private sale. That 1155 pieces of scrip, each representing one half the allowance of land, were issued to those entitled thereto, and were accepted in part payment for the lands aforesaid; that the remaining 1155 half pieces of scrip were reserved and interest paid thereon valued at $1.25 per acre to those entitled thereto, until the principal of $872,000 was paid upon the execution of a final release of all claims of such parties under the fourteenth article of the treaty. That thereby the claims of 1155 Choctaw heads of families were fully satisfied and discharged, and any further claim by or on behalf of them was forever barred. The plea prays that so much of the amended petition as sets forth a cause of action in behalf of said 1155 Choctaw heads of families for the value of lands alleged to be due them be dismissed.

To this special plea the Choctaw Nation filed a replication on April 22, 1884, which in substance denied the validity of the alleged release mentioned in the plea, on the ground that the same was wrongfully exacted under circumstances that made it inequitable for the United States to insist upon it as a bar to the claims of the Choctaw Nation covered by it.

The case having been heard before the Court of Claims, the court, upon the evidence, found the facts, which are set out in much detail. It is only necessary here to state the following:

The War Department, then having charge of Indian affairs, on May 21, 1831, instructed Colonel Ward, the Indian agent in Mississippi, on the subject of carrying into effect the treaty of

Digitized by Google

September 27, 1830. The correspondence between the department and its agents is set out fully. On June 26, 1833, Mr. G. W. Martin was appointed by the War Department to make selections of the locations of land granted to the Choctaws under the 14th, 15th, and 19th articles of the treaty, and was instructed to call on Ward and Major Armstrong, also an agent of the United States, appointed under the treaty, for the registry of the different classes so entitled. In pursuance of his instructions, Mr. Martin located claims and received evidence of claimants, and transmitted reports to the Secretary of War, with a list of 580 claims for reservations under the 14th article, and with affidavits as to forty claimants, showing imperfections in Ward's register, and that persons who sought to be registered were refused, and not permitted to do so.

It was found as a fact by the Court of Claims that Ward was unfit for the duties of the situation; that his conduct was marked by acts calculated to deter the Indians from making application; that he was abusive and insulting to them, preventing them thereby from making application under the 14th article of the treaty, in order to necessitate their going west of the Mississippi. He insisted that the Indians had sold their land; that he had been instructed to induce as many as possible to go west; and that more had been registered than had been anticipated. After the 24th of August, 1831, the agents of the United States insisted that those whose names were not registered should go west, and that if they did not go soldiers would be sent to drive them out; that they would take their children from them; and many other threats were made by them.

On the 31st of July, 1838, about 5000 of the Choctaw Indians still remained in Mississippi; notwithstanding the efforts of the removing agent of the government to remove them, they remained, asserting their intention to do so, and claiming the benefit of the 14th article of the treaty of 1830. It was the intention of those remaining east of the Mississippi to take the benefit of the 14th article of the treaty.

It was also found by the court that the whole number of heads of families receiving land under the 14th article was

Digitized by Google

143; the number who established their rights under the act of Congress approved August 23, 1842, was 1150; and the number disallowed by the commissioner was 292. The commissioner rejected the claims of 191 heads of families under that act because they had no improvement on their reservations on the 27th of September, 1830, and did not reside on the same for five years continuously after said date. These 191 families complied, or attempted to comply, with the requirements of the 14th article within the time required by it, but were deprived of their rights under it by the agents of the United States. They were entitled to reservations amounting to 225,760 acres.

It was also found by the court that, under the provisions of the act of Congress approved August 23, 1842, the United States, having failed to grant to said Choctaw heads of families the lands which they and their children claimed under said treaty, and having disposed of the said lands, so that it was impossible to give said Choctaw heads of families the lands whereon they resided on the date of the treaty of 1830, did, between June, 1843, and November, 1851, issue and deliver to the said 1155 Choctaw heads of families, and to their children, the certificates or scrip provided for in said act, for 1,404,640 acres of land, which certificates or scrip the said Choctaw heads of families and their children were required by the United States to receive and accept in lieu of the reservations of land which, under the said 14th article of the treaty, they claimed. The United States refused to deliver to the said Choctaw heads of families and their children that one half of the scrip which might have been delivered to them under the provisions of the said act of Congress, east of the Mississippi River, until the said Choctaw heads of families and their children had either started for, or actually arrived in, the Choctaw territory west of the Mississippi River.

Under the act of Congress approved March 3, 1845, 697,600 acres in the said certificates or scrip, so directed to be delivered to the 1155 Choctaw heads of families and their children, were funded at the value of $1.25 per acre, with interest payable thereon annually forever at the rate of five per centum

Digitized by Google

per annum; which specified number of acres in certificates, funded under said act, was that part of said certificates which was not deliverable east to the said Choctaw heads of families and their children, and not until their arrival in the Choctaw territory west of the Mississippi River. This scrip, which was funded for the benefit of said Choctaw heads of families and their children, under the act of Congress of March 3, 1845, was funded by the United States at the rate of $1.25 an acre, amounting to the sum of $872,000, which sum was paid to the said heads of families and their children, or their legal representatives, under the provisions of an act of Congress approved July 21, 1852.

It was further found by the Court of Claims that the said Choctaw heads of families and their children, claimants under the 14th article of the treaty of September, 1830, were reduced to a helpless condition of want, which rendered it practically impossible for them to contend with the United States in their requirement that the said Choctaw heads of families should accept and receive the scrip provided to be issued to them, in lieu of the reservations, by the act of 1842, and the said scrip and the money paid to redeem the same were taken and accepted because they were powerless to enforce any demands against, or impose any conditions upon, the United States.

The Choctaw Nation, by its proper authorities, on November 6, 1852, executed and delivered to the United States the following instrument, for the purposes therein specified:

"Whereas, by an act of Congress entitled 'An Act to supply deficiencies in the appropriations for the service of the fiscal year ending the 30th day of June, 1852,' all payments of interest on the amount awarded Choctaw claimants under the 14th article of the treaty of Dancing Rabbit Creek for lands on which they resided, but which it is impossible to give them, shall cease, and that the Secretary of the Interior be directed to pay said claimants the amount of the principal awards in each case respectively, and that an amount necessary for this purpose be appropriated, not exceeding the sum of $872,000; and that final payment and satisfaction of said awards shall

Digitized by Google

be first ratified and approved as a final release of all claims of such parties under the 14th article of said treaty, by the proper national authority of the Choctaws, in such form as shall be prescribed by the Secretary of the Interior: Now be it known, that the said general council of the Choctaw Nation do hereby ratify and approve the final payment and satisfaction of said awards, agreeably to the provisions of the act aforesaid, as a final release of the claims of such parties under the 14th article of said treaty."

On the 9th day of November, 1853, the legislative council of the Choctaw Nation provided for the appointment of a delegation which should represent said nation in the settlement of all the unsettled claims and demands of said nation or individual members thereof against the United States. The preamble to the joint resolution appointing that delegation recites that "the Choctaws were, and ever have been, dissatisfied with the manner in which the treaty of Dancing Rabbit Creek was made, owing to the many circumstances which were created to force them into it, and owing to the exceeding small and inadequate amount which was given as payment for their country;" and that "a large number of claims on the United States, arising under the 14th and 19th and other articles of the treaty of 1830, are still remaining unpaid;" and the said delegates were "clothed with full power to settle and dispose of, by treaty or otherwise, all and every claim and interest of the Choctaw people against the government of the United States, and to adjust and bring to a final close all unsettled business" between said people and the government of the United States.

This delegation opened negotiations with the United States, through the Commissioner of Indian Affairs, for a new treaty, by means of a communication in writing, dated on the 5th of April, 1854, which contained a general statement or survey of the condition of the relations then existing between the Choctaw Nation and the United States, and set out *seriatim* complaints against the government, especially for causes of dissatisfaction arising under the treaty of September 27, 1830, claiming that scarcely one of the stipulations of that treaty

Digitized by Google

had been carried out by the government, so as to do justice according to the intent of the treaty. They especially alleged that the laws passed for the examination of their claims under said treaty, and the 14th article thereof, prescribed a course of adjudication of so rigid and technical a character as necessarily to exclude many just claims; that many were compelled to remove because of the failure of the government to give them their rights under the said article, and that the law unjustly cut off such persons from the benefits of it; that the scrip issued under the law was paid in such a manner as to make it of but little value to the Indian; and that those who received anything received but a mere pittance. They contended that many claims existed unadjusted and unpaid under the 19th article, and proposed to make arrangement for final adjustment of all matters, national and individual, in a new treaty, by which the nation proposed to pay all individual claims under the 14th and 19th articles, and release the government of the United States from all responsibility on that account, because such claims were not susceptible of proof against the United States, but could be adjusted by the authorities of the nation, provided the nation could effect such a settlement with the United States as the Choctaw people desired. They claimed that under the treaty of September 27, 1830, the Choctaw Nation was entitled to the funds arising from the sale of lands ceded, after deducting the expenses of sale, and the debt mentioned in said treaty; that the government of the United States was a trustee for the Choctaw Nation in the sale of the lands ceded by that treaty, so that, after the payment of the expenses incident to the execution of the trust, the Indians were entitled to the remainder; and they proposed that the payment to the nation of such remainder should operate in law as a satisfaction of the individual claims under a new treaty.

Upon the basis of this communication the Commissioner of Indian Affairs instructed the agent of the United States for the Choctaws to make the requisite inquiry and investigation to ascertain the character and extent of their claims, and what arrangement was necessary to accomplish the object in

Digitized by Google

view. The agent of the United States for the Choctaws submitted to the Commissioner of Indian Affairs, in answer to this reference, a paper containing a comparative estimate or approximate statement of the claims then asserted by the Choctaw commissioners, which statement had been furnished by the Choctaw delegation to said agent. The aggregate amount of these claims so stated was $6,599,230, which it was proposed to settle on the principle of allowing the net proceeds of the sales of the lands ceded to the United States by the Choctaw Nation under the treaty of September 27, 1830, the whole showing the balance claimed to be due to the Choctaws to be $2,380,701. The agent of the United States, in his communication to the Commissioner of Indian Affairs, referring to said statement, said: "I have examined this statement carefully, and from the most reliable information I am possessed of, obtained in the Choctaw country and here, I am inclined to think that part of it, embracing the extent of the obligations under the treaty, is as nearly correct as it could be made at this date."

The amount of the obligations under the treaty, thus referred to, was placed in said statement at $6,599,230. These negotiations between the Choctaw delegation and the executive authorities of the United States were conducted with reference to the accomplishment of the following objects:

1st. That the United States should provide, in a new treaty, for an examination and settlement of all the claims of the Choctaws, whether national or individual, under the treaty of 1830, as specified in the letter of the Choctaw delegation to the Commissioner of Indian Affairs, dated April 5, 1854.

2d. That the Choctaws should adjust their disputes with the Chickasaws; should lease to the United States all that portion of their common territory between the 98th and 100th degrees of west longitude, for the permanent settlement of the Wichita and such other bands of Indians as the United States might desire to locate therein; and should absolutely and forever quit claim and relinquish to the United States all their right, title, and interest in and to any and all lands west of the 100th degree of west longitude.

Digitized by Google

These negotiations resulted in the treaty of 1855, which was ratified by the Senate of the United States on the 21st of February, 1856, and proclaimed by the President on March 4th of the same year. 11 Stat. 611. The preamble to that treaty recites that "the Choctaws contend that by a just and fair construction of the treaty of September 27, 1830, they are, of right, entitled to the net proceeds of the lands ceded by them to the United States under said treaty, and have proposed that the question of their right to the same, together with the whole subject-matter of their unsettled claims, whether national or individual, against the United States, arising under the various provisions of said treaty, shall be referred to the Senate of the United States for final adjudication and adjustment."

By the terms of that treaty, a division of their common lands was made between the Choctaws and the Chickasaws, and the Choctaws relinquished to the United States all their lands west of the 100th degree of west longitude, and the Choctaws and the Chickasaws together leased to the United States all that portion of their common territory west of the 98th degree of west longitude, for the permanent settlement of the Wichita and such other tribes or bands of Indians as the government of the United States might desire to locate therein. The 11th and 12th articles of said treaty are as follows:

"Article 11. The government of the United States, not being prepared to assent to the claim set up under the treaty of September the twenty-seventh, eighteen hundred and thirty, and so earnestly contended for by the Choctaws as a rule of settlement, but justly appreciating the sacrifices, faithful services, and general good conduct of the Choctaw people, and being desirous that their rights and claims against the United States shall receive a just, fair, and liberal consideration, it is therefore stipulated that the following questions be submitted for adjudication to the Senate of the United States:

"First. Whether the Choctaws are entitled to, or shall be allowed, the proceeds of the sale of the lands ceded by them to the United States by the treaty of September the twenty-

Digitized by Google

seventh, eighteen hundred and thirty, deducting therefrom the cost of their survey and sale, and all just and proper expenditures and payments under the provisions of said treaty; and, if so, what price per acre shall be allowed to the Choctaws for the lands remaining unsold, in order that a final settlement with them may be promptly effected. Or,

"Second. Whether the Choctaws shall be allowed a gross sum in further and full satisfaction of all their claims, national and individual, against the United States; and, if so, how much.

"ARTICLE 12. In case the Senate shall award to the Choctaws the net proceeds of the lands ceded as aforesaid, the same shall be received by them in full satisfaction of all their claims against the United States, whether national or individual, arising under any former treaty; and the Choctaws shall thereupon become liable and bound to pay all such individual claims as may be adjudged by the proper authorities of the tribe to be equitable and just — the settlement and payment to be made with the advice and under the direction of the United States agent for the tribe; and so much of the fund awarded by the Senate to the Choctaws, as the proper authorities thereof shall ascertain and determine to be necessary for the payment of the just liabilities of the tribe, shall, on their requisition, be paid over to them by the United States. But should the Senate allow a gross sum, in further and full satisfaction of all their claims, whether national or individual, against the United States, the same shall be accepted by the Choctaws, and they shall thereupon become liable for, and bound to pay, all the individual claims as aforesaid; it being expressly understood that the adjudication and decision of the Senate shall be final."

In pursuance of the eleventh article of the treaty, the questions submitted to the Senate of the United States were answered by a resolution of the Senate passed on the 9th of March, 1859, as follows:

"Resolved, That the Choctaws be allowed the proceeds of the sale of such lands as have been sold by the United States on the 1st day of January last, deducting therefrom the costs

Digitized by Google

of their survey and sale, and all proper expenditures and payments under said treaty, excluding the reservations allowed and secured, and estimating the scrip issued in lieu of reservations at the rate of $1.25 per acre; and, further, that they be also allowed twelve and a half cents per acre for the residue of said lands."

In reference to this award of the Senate, the Court of Claims, in the finding of facts, says: "The consideration which was given by the Senate to the subject-matter so submitted to it by the said eleventh article of the said treaty, and to the evidence which was so presented to, and taken and considered by, the Senate, was full, fair, and impartial, and its adjudication, as made under the said article, was not influenced or affected by, and was in no way or degree the result of, any fraud, corruption, partiality, and there is no evidence tending to show that it was the result of surprise or mistake on the part of the Senate, or any member thereof."

On the 9th of March, 1859, the Senate of the United States also adopted a resolution for the purpose of ascertaining the amount due the Choctaw Nation under their award, as follows: "Resolved, That the Secretary of the Interior cause an account to be stated with the Choctaws showing what amount is due them according to the above prescribed principles of settlement, and report the same to Congress." And the Secretary of the Interior, in compliance with the mandate of said resolution, did, on the 8th of May, 1860, transmit to Congress a statement of account with the Choctaw Nation. This account shows, as the proceeds of the sales of the Choctaw lands up to January 1, 1859, together with the residue of said lands unsold at that date, at twelve and one-half cents per acre, an amount in all of $8,078,614.80, from which was to be deducted the whole amount of charges, equal to $5,097,367.50, leaving a balance due to the Choctaws of $2,981,247.30.

On the 9th day of January, 1861, the Choctaw Nation, by its memorial addressed to Congress, demanded payment from the United States of the amount claimed to be due to it under said award. By the provisions of the act of March 2, 1861, the Indian appropriation act, 12 Stat. 238, there was paid to

Digitized by Google

the Choctaw Nation the sum of $250,000 on account of their claim. The bonds for the additional sum of $250,000, which were by that act directed to be issued and delivered to said Choctaw Nation on account of said claim, were never issued or delivered to it, although demand for the same was made upon the Secretary of the Treasury by them on the 4th of April, 1861.

Upon the findings of fact, the Court of Claims found a balance due the Choctaw Nation from the United States of $408,120.32, made up of various claims arising under the treaty of 1830, and for the value of land taken in fixing the boundary between the State of Arkansas and the Choctaw Nation, deducting the payment made, under the act of 1861, of $250,000. In reaching this conclusion the Court of Claims rejected the award of the Senate, under the treaty of 1855, as having no effect in law, and excluded the consideration of all claims covered by the release executed by the Choctaw Nation on November 6, 1852.

Mr. John J. Weed, *Mr. Jeremiah M. Wilson*, and *Mr. Samuel Shellabarger* for the Choctaw Nation.

Mr. Assistant Attorney General Maury and *Mr. Assistant Attorney General Howard* for the United States.

Mr. Justice Matthews, after stating the case as above reported, delivered the opinion of the Court.

The general purpose of this suit is a judicial settlement of all existing controversies between the Choctaw Nation and the United States. The specific claims of the Choctaw Nation are stated in the petition in the alternative. It is claimed, in the first instance, that the award of the Senate, and the amount found due as a balance upon the account between the parties, stated upon the principles of that award, should either be enforced as a finality by the judgment of the court in the present case, or that, if not technically enforceable as an award, it still furnishes a rule for an equitable settlement of the differences between the parties. But, in the second place, it is claimed that if the award cannot be considered in either of these lights, then the whole controversy and all questions in-

Digitized by Google

volved in it, from the beginning, under any of the treaties between the parties, are open for investigation and decision upon their original merits. And under this head the Choctaw Nation claim compensation for various breaches, on the part of the United States, of the treaty of September 27, 1830, and, in general, such a failure on its part to comply with its provisions, as in substance deprived the Choctaw Nation of all the benefits intended to be conferred by it, for which it is claimed they are entitled to an equitable equivalent as compensation.

In respect to so much of the petitioner's case as rests upon specific failures to comply with the provisions of article 14 of that treaty, as to those Choctaw heads of families who claimed reservations within its terms and did not receive them, the government of the United States relies upon the release executed by the Choctaw Nation in pursuance of the requirements of the act of July 21, 1852, under which a payment of $872,000 was made in satisfaction of the amounts awarded the Choctaw claimants under that article of the treaty of 1830.

The Court of Claims, as it appears, declined to give any legal effect whatever to the award made by the Senate under the treaty of 1855, feeling constrained to that conclusion by the terms of the act of March 3, 1881, conferring jurisdiction upon it in this suit, and on the other hand, it gave all the effect claimed by the United States for the release under the act of 1852. Its judgment in favor of the Choctaw Nation was made up as follows:

For claims under the 14th article of the treaty of 1830, not covered by the release of 1852 . .	$417,656.00
For claims under the 19th article of the treaty of 1830	42,920.00
For land taken in fixing the boundary of the State of Arkansas and the Choctaw Nation .	68,102.00
For transportation and subsistence under the treaty of 1830	51,993.00
For unpaid annuities	59,449.32
For guns, ammunition, &c.	18,000.00
Total	$658,120.32

Digitized by Google

And it credited the balance thus found due with a payment made under the act of March 2, 1861, of $250,000.

In reviewing the controversy between the parties presented by this record, it is important and necessary to consider and dispose of some preliminary questions. The first relates to the character of the parties, and the nature of the relation they sustain to each other. The United States is a sovereign nation, not suable in any court except by its own consent, and upon such terms and conditions as may accompany that consent, and is not subject to any municipal law. Its government is limited only by its own Constitution, and the nation is subject to no law but the law of nations. On the other hand, the Choctaw Nation falls within the description in the terms of our Constitution, not of an independent state or sovereign nation, but of an Indian tribe. As such, it stands in a peculiar relation to the United States. It was capable under the terms of the Constitution of entering into treaty relations with the government of the United States, although, from the nature of the case, subject to the power and authority of the laws of the United States when Congress should choose, as it did determine in the act of March 3, 1871, embodied in § 2079 of the Revised Statutes, to exert its legislative power.

As was said by this court recently in the case of the *United States* v. *Kagama*, 118 U. S. 375, 383: "These Indian tribes *are* the wards of the nation; they are communities *dependent* on the United States; dependent largely for their daily food; dependent for their political rights. They owe no allegiance to the States and receive from them no protection. Because of the local ill-feeling, the people of the States where they are found are often their deadliest enemies. From their very weakness and helplessness, so largely due to the course of dealing of the Federal Government with them, and the treaties in which it has been promised, there arises the duty of protection, and with it the power. This has always been recognized by the Executive, and by Congress, and by this court, whenever the question has arisen."

It had accordingly been said in the case of *Worcester* v. *Georgia*, 6 Pet. 515, 582: "The language used in treaties with

Digitized by Google

the Indians should never be construed to their prejudice. If words be made use of which are susceptible of a more extended meaning than their plain import, as connected with the tenor of the treaty, they should be considered as used only in the latter sense. . . . How the words of the treaty were understood by this unlettered people, rather than their critical meaning, should form the rule of construction."

The recognized relation between the parties to this controversy, therefore, is that between a superior and an inferior, whereby the latter is placed under the care and control of the former, and which, while it authorizes the adoption on the part of the United States of such policy as their own public interests may dictate, recognizes, on the other hand, such an interpretation of their acts and promises as justice and reason demand in all cases where power is exerted by the strong over those to whom they owe care and protection. The parties are not on an equal footing, and that inequality is to be made good by the superior justice which looks only to the substance of the right, without regard to technical rules framed under a system of municipal jurisprudence, formulating the rights and obligations of private persons, equally subject to the same laws.

The rules to be applied in the present case are those which govern public treaties, which, even in case of controversies between nations equally independent, are not to be read as rigidly as documents between private persons governed by a system of technical law, but in the light of that larger reason which constitutes the spirit of the law of nations. And it is the treaties made between the United States and the Choctaw Nation, holding such a relation, the assumptions of fact and of right which they presuppose, the acts and conduct of the parties under them, which constitute the material for settling the controversies which have arisen under them. The rule of interpretation already stated, as arising out of the nature and relation of the parties, is sanctioned and adopted by the express terms of the treaties themselves. In the 11th article of the treaty of 1855, the government of the United States expresses itself as being desirous that the rights and claims of the Choctaw people against the United States "shall receive a just, fair, and liberal consideration."

Digitized by Google

The language of the act of March 3, 1881, conferring jurisdiction in the present case, also requires construction. It confers jurisdiction upon the Court of Claims to try all questions of difference arising out of treaty stipulations with the Choctaw Nation, and to render judgment thereon. How far the settlement of these differences is to be affected by the various acts of Congress referred to in the pleadings and findings of fact made by the Court of Claims, and which were passed professedly in execution of treaty obligations on the part of the United States, must be determined. These acts of Congress, in one aspect, have the force of law, because Congress has full power of legislation over the subject; but, in so far as they may have proceeded upon insufficient or incorrect interpretations of the treaty rights of the Choctaw Nation, or in so far as they may have attempted to modify or disregard those rights, they form the very subjects of complaint on the part of the Choctaw Nation, whose allegation is, that the United States, by these very statutes, as in other particulars, have broken their treaty obligations. Where, in professed pursuance of treaties, these statutes have conferred valuable benefits upon the Choctaw Nation, which the latter have accepted, they partake of the nature of agreements — the acceptance of the benefit, coupled with the condition, implying an assent on the part of the recipient to the condition, unless that implication is rebutted by other and sufficient circumstances. Under the terms of the act of March 3, 1881, in exercising the jurisdiction thereby conferred, the Court of Claims is empowered to review the entire question of differences *de novo*, which may be interpreted to imply that the whole matter was opened from the beginning, with the view of determining what the original treaty rights of the Choctaw Nation were, and how far they have been performed by the United States in its various transactions with them, including the acts done under the authority of the statutes referred to. The meaning of this clause becomes most important, however, in connection with the question, how the court is authorized to deal with the award made by the Senate of the United States in pursuance of the treaty of 1855.

It is contended, on the part of the Choctaw Nation, that

Digitized by Google

that award is final and conclusive, and in support of that contention reference is made to the express provisions of the treaty of 1855. It is recited in the preamble of that treaty, that the Choctaws have proposed that their claims against the United States, arising under the various provisions of the treaty of September 27, 1830, shall be referred to the Senate of the United States for final adjudication and adjustment; and by the terms of the 12th article of the treaty it is declared to be "expressly understood that the adjudication and decision of the Senate shall be final;" and the right to insist upon the conclusive nature of this award, it is said, is a treaty right in favor of the Choctaw Nation.

On the other hand, it is declared by the act of March 3, 1881, that, in the exercise of its jurisdiction to try this case, the Court of Claims "shall not be estopped by any action had or award made by the Senate of the United States in pursuance of the treaty of 1855;" and it is insisted, on behalf of the United States, that this language is inconsistent with the idea that the court should give to that award any legal effect whatever. And this construction is supposed to be rendered necessary by the previous clause, which grants power to the court to review the entire question of differences *de novo;* for it is said that the court cannot review the question of differences *de novo*, that is, from the beginning, and as if they were new and had freshly arisen, if it gives any effect to a determination of the Senate, which it is claimed operates as *res judicata*, foreclosing further inquiry into the merits of the very questions to be reviewed.

If the words conferring the power to review the question of differences *de novo* are permitted to have that force, it is difficult to understand how the release made by the Choctaw Nation in pursuance of the act of Congress of July 21, 1852, should stand in the way of a reconsideration of the claims covered by it. That act of Congress, it is true, declares that the final payment and satisfaction of the sum thereby appropriated and paid, should, when ratified and approved by the proper national authority of the Choctaws, operate as a final release of all claims of those to whom such payments are

Digitized by Google

made, under the 14th article of the treaty of September 27, 1830. But whether that payment was a just and fair extinguishment of those claims, according to the terms of that treaty, was one of the very questions in dispute. And it is not unreasonable to contend, as it is contended on behalf of the Choctaw Nation, that the effect of that release should be considered in view of the circumstances under which it was executed, and in reference to which the Court of Claims has found, in the 16th finding, that "the claimants under the 14th article, the said Choctaw heads of families and their children, were reduced to a helpless condition of want, which rendered it practically impossible for them to contend with the United States in their requirement that the said Choctaw heads of families should accept and receive the scrip provided to be issued to them in lieu of the reservations by the act of 1842; and the said scrip and the money paid to redeem the same were taken and accepted because they were powerless to enforce any demands against, or impose any conditions upon, the United States."

However this may be, the language of the act of March 3, 1881, in reference to the award made by the Senate under the treaty of 1855, does not abrogate it, and does not require, as a condition of the exercise of the jurisdiction conferred by the act, that the court should entirely disregard it, giving it no effect whatever. It merely says that the court shall not be estopped by any action had or award made by the Senate in pursuance of that treaty. The plain and literal meaning of this language is fully satisfied by holding that the award, considered as such, shall not, upon its face, be taken to be final and conclusive. There is nothing in the language to prevent the court from giving to that award effect as *prima facie* establishing the validity of the claim so far adjudged in favor of the Choctaw Nation, leaving to the representatives of the government in this litigation the right not only to question the validity of the award, as such, upon any such grounds as might or should invalidate awards ordinarily, either at law or in equity, but also to attack it upon the merits, as a finding unsupported by proof, or unjust and unfair in view of all the

Digitized by Google

circumstances, and on that account not to be enforced. In that view, so much effect only would be given to it as to cast the burden of disproving its justice and fairness upon the United States in this suit. In that light, and with that view, it has been attacked in argument by the counsel for the United States, upon the proof contained in the case.

In the first place, it is objected that the award did not agree with the submission, and under that head it is argued that the first question submitted for adjudication to the Senate was whether the Choctaws were entitled to the proceeds of the sale of the lands ceded by them to the United States by the treaty of September 27, 1830, and that there was no authority to allow to them such proceeds, unless the Senate should first find that they were entitled to them. And it is said that the Senate not only did not find that, as matter of law, the Choctaws were so entitled under the terms of the treaty of September 27, 1830, but that, according to the report of the Committee on Indian Affairs, which was adopted by the Senate in the passage of the resolutions which contain the award itself, their title to those proceeds, considered as matter of law, was denied. We do not, however, think that the words of the question submitted to the Senate by the treaty of 1855 are to be confined to a consideration of the question of a strict title to the proceeds of the sale of the lands, but that they plainly mean, whether the Choctaws, under all the circumstances, as a matter of justice and fair dealing, ought to receive such proceeds, whether as deducible from the terms of the treaty or as merely a fair compensation to be awarded to them for its breaches by the United States. The language of the question is in the alternative; it is whether the Choctaws are entitled to or *shall be allowed;* and it was sufficient, in our judgment, to satisfy the terms of the submission, for the Senate to declare, as it did, that the Choctaws should be allowed the proceeds of the sale of the lands sold by the United States which had been ceded by the Choctaws under the treaty of 1830; and we are, therefore, of opinion that the award cannot be avoided on this ground.

Second. It is next insisted that the award is invalid because

Digitized by Google

it is uncertain, inasmuch as while it determines that the Choctaws shall be allowed the proceeds of the sale of the lands ceded by the treaty of 1830, and at the rate of 12½ cents an acre for the residue, it does not ascertain what those proceeds and the value of the residue amount to in the aggregate. But the award itself provided the means of reducing this uncertainty by a reference to the Secretary of the Interior, who was directed to cause the account to be stated with the Choctaws, showing what amount was due them according to the principle of settlement embraced in the award. It is not disputed but that the Secretary of the Interior was enabled by the records of his office to state such an account, and that in fact he has stated it. This reference to the Secretary of the Interior for the mere purpose of an account cannot be considered as a delegation of authority by the Senate to adjudicate any of the questions which had been submitted to it by the agreement of the parties. The stating of the account was merely in execution of the judgment; the principle on which it should proceed was fully, clearly, and finally adjudged. Whatever exception might be taken to the account when rendered, would not be different from such as in the usual course of equity practice might be taken to the report of a master to whom was referred the statement of an account, the principles of which had been previously settled by a decree of the court fixing and establishing the rights of the parties.

Third. It is also said that the award is invalid for lack of proper notice to the United States of the intended action of the arbitrator before proceeding to the adjudication. When it is considered that the Senate of the United States was the arbitrator, constituting, as it does, a branch of the legislative as well as of the treaty making power of the government of the United States, it can hardly be contended that the United States had no notice of proceedings taken by the Senate in pursuance of laws or treaties made by the United States.

Whatever force might otherwise be supposed to reside in these objections to the validity of the award are further answered by a reference to the terms of the Indian appropriation act of March 2, 1861, 12 Stat. 238, which enacts as

Digitized by Google

follows: "For payment to the Choctaw nation or tribe of Indians, on account of their claim under the eleventh and twelfth articles of the treaty with said nation or tribe made the twenty-second of June, 1855, the sum of five hundred thousand dollars; two hundred and fifty thousand dollars of which sum shall be paid in money; and for the residue the Secretary of the Treasury shall cause to be issued to the proper authorities of the nation or tribe, on their requisition, bonds of the United States, authorized by law at the present session of Congress: *Provided*, that in the future adjustment of the claim of the Choctaws, under the treaty aforesaid, the said sum shall be charged against the said Indians."

This appropriation, and the payment which was made under it, would seem to have the effect of confirming the award of the Senate, for it makes an appropriation in part payment of it, and provides for the future adjustment of the claim of the Choctaws under it. It is true, as is insisted in argument, that no express mention is made in this act of the award, and the claim of the Choctaw Nation is described as one arising under the 11th and 12th articles of the treaty of 1855, but no possible claim could arise under those articles of that treaty in behalf of the Choctaw Nation, except one to insist upon the arbitration and to enforce the award made, in pursuance of their terms. The whole object and scope of those articles of the treaty is to provide for the submission to the arbitration of the Senate, and the execution of the award made under it. The future adjustment of the claims of the Choctaws mentioned in the proviso evidently refers to the division of the fund, ascertained by the report of the Secretary of the Interior, by which a portion was to be paid over to the nation for the satisfaction of individual claimants, and the remainder retained by the United States as a trust fund, according to the 13th article of the treaty of 1855.

It does not, therefore, give too much effect to the act of March 2, 1861, to treat it as an act of Congress confirming the validity of the Senate award. This view is very much strengthened by the terms of the act of June 23, 1874, from which it appears that at that recent date Congress intended to

Digitized by Google

treat the award of the Senate as valid and binding, and the report of the Secretary of the Interior as to the balance due to be final. The provision of that act, 18 Stat. 230, is as follows: "That the Secretary of the Treasury is hereby directed to inquire into the amounts of liabilities due from the Choctaw tribe of Indians to individuals, as referred to in articles twelve and thirteen of the treaty of June twenty-second, eighteen hundred and fifty-five, between the United States and the Choctaw and Chickasaw tribes of Indians, and to report the same to the next session of Congress, with a view of ascertaining what amounts, if any, should be deducted from the sum due from the United States to said Choctaw tribe, for the purpose of enabling the said tribe to pay its liabilities, and thereby to enable Congress to provide a fund to be held for educational and other purposes for said tribe, as provided for in article thirteen of the treaty aforesaid."

The only further question, then, which can be claimed to be left open for adjudication in this suit by the terms of the act of March 3, 1881, is, on the supposition that the award is *prima facie* evidence of the correctness of the claim thereby reduced to judgment, whether upon its merits it was fair, just, and equitable, as a settlement between the parties of the matters in controversy, having regard to all the circumstances of the case. As already declared, it is the right of the United States to question its validity by questioning its justice; at the same time, the burden of proof is upon them to establish, by affirmative proof, the considerations which ought to constrain this court, as a matter of justice, altogether to disregard it.

Proceeding, then, to review the whole questions of difference between the parties *de novo* for this purpose, we are led to the conclusion that the principle of settlement adjudged by the Senate in its award, in pursuance of the 11th article of the treaty of 1855, furnishes the nearest approximation to the justice and right of the case that, after this lapse of time, it is practicable for a judicial tribunal to reach. Our judgment to this effect is based upon the following considerations:

The situation and circumstances in which the parties were found at the time the treaty of September 27, 1830, was

Digitized by Google

entered into, were these: By the previous treaty of 1820, the policy of the United States therein declared, and the agreement between the parties, was "to promote the civilization of the Choctaw Indians, by the establishment of schools amongst them, and to perpetuate them as a nation by exchanging for a small part of their land here," that is, in Mississippi, "a country beyond the Mississippi River, where all who live by hunting and will not work may be collected and settled together." It was also recited that it was "desirable to the State of Mississippi to obtain a small part of the land belonging to said nation for the mutual accomodation of the parties." Accordingly, the Choctaws, by the treaty of 1820, ceded to the United States a portion only of their lands in Mississippi.

By the 2d article of the treaty it was declared that, "for and in consideration of the foregoing cession on the part of the Choctaw Nation, and in part satisfaction for the same, the commissioners of the United States, in behalf of said States," thereby ceded to said nation a tract of country west of the Mississippi River, the boundaries of which were described. It was also declared by article 4 of that treaty, that "the boundaries hereby established between the Choctaw Indians and the United States on this side of the Mississippi River shall remain without alteration until the period at which said nation shall become so civilized and enlightened as to be made citizens of the United States, and Congress shall lay off a limited parcel of land for the benefit of each family or individual in the nation."

By the treaty of January 20, 1825, it was further stipulated that the 4th article of the treaty of October 18, 1820, should be so modified as that Congress should not exercise the power of apportioning the lands for the benefit of each family or individual of the Choctaw Nation, and of bringing them under the laws of the United States, but with the consent of the Choctaw Nation. In the meantime, however, under the pressure of the demand for the settlement of the unoccupied lands of the State of Mississippi by emigrants from other States, the policy of the United States in respect to the Indian tribes still dwelling within its borders underwent a change, and it be-

Digitized by Google

came desirable by a new treaty to effect so far as practicable the removal of the whole body of the Choctaw Nation, as a tribe, from the limits of the State to the lands which had been ceded to them west of the Mississippi River. To carry out that policy the treaty of 1830 was negotiated.

By the 3d article of that treaty the Choctaw Nation of Indians ceded to the United States the entire country they owned and possessed east of the Mississippi River, and agreed to remove beyond the Mississippi River as early as practicable, so that as many as possible of their people, not exceeding one-half of the whole number, should depart during the falls of 1831 and 1832, and the residue follow during the succeeding fall of 1833. But, in order to induce the consent of the Choctaw Nation, as such, to the provisions of that treaty, the United States entered into the obligations already specified and contained in its subsequent articles, particularly articles 14, 15, and 19, by which large reservations of land were made, so that under article 14 the head of every Choctaw family who desired to remain and become a citizen of the United States was entitled to do so, and thereupon became entitled to a reservation of a section of 640 acres of land for himself, and an additional half-section for each unmarried child living with him over ten years of age, and an additional quarter-section for each child under ten years of age, to adjoin his own location; with the further provision, that if they resided upon said lands, intending to become citizens of the States, for five years after the ratification of the treaty, a grant in fee simple should issue to them. The Choctaws, it appears, were very reluctant to emigrate from their old homes to their new ones, and a very much larger number than was expected manifested an intention to avail themselves of those provisions of the treaty which entitled them to remain.

It is notorious as a historical fact, as it abundantly appears from the record in this case, that great pressure had to be brought to bear upon the Indians to effect their removal, and the whole treaty was evidently and purposely executed, not so much to secure to the Indians the rights for which they had stipulated, as to effectuate the policy of the United States in

Digitized by Google

regard to their removal. The most noticeable thing, upon a careful consideration of the terms of this treaty, is, that no money consideration is promised or paid for a cession of lands, the beneficial ownership of which is assumed to reside in the Choctaw Nation, and computed to amount to over ten millions of acres. It was not an exchange of lands east of the Mississippi River for lands west of that river. The latter tract had already been secured to them by its cession under the treaty of 1820.

It is true that by the 18th article of the treaty of 1830 it is provided that, "for the payment of the several amounts secured in this treaty, the lands hereby ceded are to remain a fund pledged to that purpose, until the debt shall be provided for and arranged. And, further, it is agreed that, in the construction of this treaty, wherever well-founded doubt shall arise, it shall be construed most favorably towards the Choctaws." The only money payments secured by the treaty, over and above the necessary expenditures in removing the Indians, in providing for their subsistence for twelve months after reaching their new homes, and paying for their cattle and their improvements, are, first, an annuity of $20,000 for twenty years, commencing after their removal to the west; and, second, the amount to be expended in the education of forty Choctaw youths for twenty years, and for the support of three teachers of schools for twenty years, together with the cost of erecting some public buildings, and furnishing blacksmiths, weapons, and agricultural implements, in addition to the several annuities and sums secured under former treaties to the Choctaw Nation and people. It is nowhere expressed in the treaty that these payments are to be made as the price of the lands ceded; and they are all only such expenditures as the government of the United States could well afford to incur for the mere purpose of executing its policy in reference to the removal of the Indians to their new homes. As a consideration for the value of the lands ceded by the treaty, they must be regarded as a meagre pittance.

It is, perhaps, impossible to interpret the language of this instrument, considered as a contract between parties standing

Digitized by Google

upon an equal footing and dealing at arm's length, as a conveyance of the legal title by the Choctaw Nation to the United States, to hold as trustee for the pecuniary benefit of the Choctaw people, and yet it is quite apparent that the only consideration for the transfer of the lands that can be considered as inuring to them, is the general advantage which they may be supposed to have derived from the faithful execution of the treaty on the part of the United States; and when, in that connection, it is considered that the treaty was not executed on the part of the United States according to its just intent and spirit, with a view to securing to the Choctaw people the very advantages which they had a right to expect would accrue to them under it, it would seem as though it were a case where they had lost their lands without receiving the promised equivalent. In such a case, there is a plain equity to enforce compensation, by requiring the party in default to account for all the pecuniary benefits it has actually derived from the lands themselves. This is the solid ground on which the justice of the award of the Senate of the United States under the treaty of 1855 seems to us fairly to stand.

The committee of the Senate which reported the resolutions adopted by that body as the award under the treaty of 1855 reached their conclusion upon the same premises. Their report discusses at length the various grounds on which the Choctaw Nation rightfully complained of the injurious character of the dealings of the United States with them under the treaty, and concludes as follows:

"It being thus impossible to ascertain to how much the Choctaws would be entitled, on a fair and liberal settlement, for the damage and loss sustained by them, it seems to the committee that the only practical mode of adjustment is to give them the net proceeds of their lands, not on the ground that the letter of the treaty entitles them to it, but that it is the only course by which justice can now be done them.

"And while, on the one hand, to award to the tribe the net proceeds of their lands, would surely be no *more* than just to them, because practically no regard is paid to actual value by

Digitized by Google

the United States in the sales of public lands; and undeniably the real market value of these lands which the Indians might have realized, if protected in their possession, was far greater than the price for which they actually sold; on the other hand, the United States would neither have lost, paid, nor expended anything whatever, but would only have refunded to the Choctaws the surplus remaining on hand of the proceeds of their own lands, after having repaid themselves every dollar expended for the benefit of the Choctaws; and that, after having had the use of this surplus for many years without interest, and when, according to the estimates of the General Land Office, it would really amount to little more than half of what might be recovered in a court of equity, if the case were one between individuals, as will appear by the comparative statement hereto appended.

"The committee accordingly report the following resolutions, and recommend that they be adopted and made the award and judgment of the Senate upon the questions submitted by the treaty of 1855."

The Secretary of the Interior found to be due to the Choctaw Nation, in his statement of account in conformity with the resolutions and decision of the Senate under the treaty of 1855, the sum of $2,981,247.30. This balance was reached by crediting them with the proceeds of the sales of the lands ceded by them under the treaty of September 27, 1830, made up to January 1, 1859, adding for the unsold residue of said lands their estimated value at 12½ cents per acre, amounting to $8,078,614.80 in the aggregate. Against this, deductions were charged, as follows: First, the cost of the survey and sale of the lands at ten cents an acre; and, second, payments and expenditures under the treaty; the whole amounting to $5,097,367.50, resulting in the balance above stated. Some of the items charged as payments and expenditures in this account are objected to on the part of the Choctaw Nation in this suit, and we are asked to restate the account. If, however, we felt at liberty to enter into such an examination of this account, we see nothing in the evidence presented by the record to show that the items objected to

Digitized by Google

were not properly chargeable. The result, therefore, is to establish the balance found by the Secretary of the Interior as the true amount due, ascertained according to the principle adjudged by the Senate in its award, and which we have declared to be the equitable rule of settlement between the parties. From this is to be deducted the payment of $250,000 made under the act of March 2, 1861.

This disposes of all questions of difference involved in this suit arising under treaties prior to that of 1855, except for unpaid annuities, ascertained by the Court of Claims to amount to the sum of $59,449.32, which is to be included in the judgment.

There is, however, another controversy arising under the treaty of 1855. The first article of that treaty fixed definitely the boundary of the territory ceded to the Choctaw Nation by the treaty of 1820. It is found as a fact by the Court of Claims, that, in the location of the line which was surveyed under the authority of the United States, and fixed as the permanent boundary between the State of Arkansas and the Indian country by the act of Congress of March 3, 1875, 18 Stat. 476, the government made a mistake, whereby they embraced in the territory appropriated by the United States as part of the public lands, $136,204\frac{02}{100}$ acres of Indian lands, the value of which, as ascertained by the Court of Claims, is $68,102. This is a just and valid claim, for which the petitioner is entitled to recover.

The final result is that the Choctaw Nation is entitled to a judgment against the United States for the following sums: First, $2,981,247.30, subject to the deduction of $250,000 paid under the act of 1861; second, for unpaid annuities, $59,449.32; third, for lands taken in fixing the boundary between the State of Arkansas and the Choctaw Nation, $68,102.

The judgment of the Court of Claims is, therefore, reversed, and the cause remanded to that court, with instructions to enter a judgment in conformity with this opinion.

MR. CHIEF JUSTICE WAITE dissenting.

I regret to find myself unable to agree to this judgment. If the United States had authorized suit to be brought against

Digitized by Google

them on the Senate award, I should not have hesitated about giving judgment in favor of the Choctaw Nation, upon the facts now found by the court below, for the full amount due according to the statement of the Secretary of the Interior. That award has not, in my opinion, been abrogated by the bringing of this suit. It remains, so far as anything appears in this record, as valid and as binding today as it was when made. The United States have neglected to pay the amount awarded, but the Choctaw people have never, so far as this record shows, released them from their obligation to pay. On the contrary, it seems always to have been insisted upon.

This suit is not brought upon the award, but upon the treaties, and it is to be determined, in my opinion, according to the legal rights of the parties now existing as fixed by the treaties, without regard to anything that was done by the Senate under the treaty of 1855. The language of the jurisdictional statute is this: "The Court of Claims is hereby authorized to take jurisdiction of and try all questions of difference arising out of treaty stipulations with the Choctaw Nation, and render judgment thereon; power is hereby granted the said court to review the entire question of differences *de novo*, and it shall not be estopped by any action or award made by the Senate of the United States in pursuance of the treaty of 1855." This, as it seems to me, means no more than that the questions of difference are to be tried *de novo*, as far as the award is concerned. A judgment is to be rendered. This implies that the proceeding is to be judicial in its character, and that the judgment is to be in accordance with the principles governing the rights of parties in the administration of justice by a court. The Senate, however, were, by the treaty of 1855, made arbitrators, and they were invested with power to determine whether the Choctaws were "entitled" legally to the proceeds of their lands, and, if not, whether they ought, under all the circumstances of the case, to be "allowed" such proceeds. The Senate could consider and act upon the moral obligations of the United States, but neither we nor the Court of Claims can do more than enforce their legal liabilities.

Digitized by Google

What, then, are the legal obligations of the United States under the treaties at this time, leaving the Senate award entirely out of view? The jurisdictional statute neither waives nor abrogates the release which was executed under the act of July 21, 1852. The same is true of the treaty of 1855. By the act of 1852 payments were to be made in cash to claimants under the fourteenth article of the treaty of 1830, for the amount of the scrip which had been awarded under the act of August 23, 1842, but not delivered, provided "that the final payment and satisfaction of said awards shall be first ratified and approved as a final release of all claims of *such parties* under the fourteenth article." That release was executed on the 6th of November, 1852. The treaty of 1855 recites that "the Choctaws contend that, by a just and fair construction of the treaty of September 27, 1830, they are of right entitled to the net proceeds of the lands ceded by them to the United States under said treaty, and have proposed that the question of their right to the same, together with the whole subject-matter of *their unsettled claims*, whether national or individual, against the United States, arising under the various provisions of said treaty, shall be referred to the Senate of the United States for final adjudication and adjustment." In view of this recital, we are to construe Article XI of the treaty, which is in these words:

"The Government of the United States not being prepared to assent to the claim set up under the treaty of September the twenty-seventh, eighteen hundred and thirty, and so earnestly contended for by the Choctaws as a rule of settlement, but justly appreciating the sacrifices, faithful services, and general good conduct of the Choctaw people, and being desirous that their rights and claims against the United States shall receive just, fair, and liberal consideration, it is therefore stipulated that the following questions be submitted for adjudication to the Senate of the United States:

"First. Whether the Choctaws are entitled to, or shall be allowed, the proceeds of the sale of the lands ceded by them to the United States, &c.," or

"Second. Whether the Choctaws shall be allowed a gross

Digitized by Google

sum in further and full satisfaction of their claims, national and individual, against the United States; and, if so, how much."

Thus the whole matter was referred to the Senate to determine, 1, Whether the Choctaws were in law entitled to the proceeds of the sale of their lands, and, if not, then, 2, What, under the circumstances, would be a fair and liberal settlement of all the matters of difference, with the right under this branch of the submission to "allow" the Choctaws the proceeds, or a "gross sum" to be ascertained in some other way. The Senate decided that they were not entitled to the proceeds as a matter of right, but that, under all the circumstances, it would be fair and just to settle on that basis. Had the same power been granted to the Court of Claims, I should not hesitate to affirm a judgment to the full amount of the award if placed on that ground. But, as has been seen, the jurisdictional statute confines the jurisdiction of the courts in this suit to a determination of the legal rights of the parties. Under the treaty the Senate could do what was fair and just, but we can only adjudge according to law.

This court agrees with the Senate committee in deciding that the Choctaws were not *legally* entitled to the proceeds of the land. In that I concur. The only inquiry, then, is, how much must be paid for the violation of the treaty of 1830 by the United States. If the release stands, then there can only be a recovery for the *unsettled* claims of the Choctaws, national and individual. In my opinion, the release has not been invalidated as an instrument binding in law by the findings in the case. The United States may have taken advantage of the necessities of the Indians and exacted a hard bargain, but the bargain was made and both parties promptly carried it out. The Senate, under its powers, might take the hardship of this bargain into account and go behind the release, but, in my judgment, we cannot. All that remains, then, is to ascertain what is legally due from the United States on account of the national and individual claims not included in that settlement, and upon this I am entirely satisfied with what was done by the Court of Claims. I think the judgment should be affirmed.

Digitized by Google

CONSOLIDATED SAFETY-VALVE COMPANY v. KUNKLE.

APPEAL FROM THE CIRCUIT COURT OF THE UNITED STATES FOR THE NORTHERN DISTRICT OF ILLINOIS.

Argued October 27, 28, 1886. — Decided November 15, 1886.

In view of the construction given in *Consolidated Safety-Valve Co.* v. *Crosby Steam-Gauge and Valve Co.*, 113 U. S. 157, to the claim of letters-patent No. 58,294, granted to George W. Richardson, September 25th, 1866, for an improvement in safety-valves, and to the claim of letters-patent No. 85,963, granted to said Richardson, July 19th, 1869, for an improvement in safety-valves for steam-boilers or generators, the defendant's safety-valves in this case, having no huddling chamber, and no strictured orifice, were held not to infringe either patent.

In equity to recover for infringement of letters-patent. The case is stated in the opinion of the court.

Mr. Thomas William Clarke for appellant.

Mr. James H. Raymond for appellee.

Mr. Justice Blatchford delivered the opinion of the court.

This is an appeal by the plaintiff in a suit in equity to recover for the infringement of two letters-patent, from a decree dismissing the bill. The suit was brought in the Circuit Court of the United States for the Northern District of Illinois, by the Consolidated Safety-Valve Company, a Connecticut corporation, against Erastus B. Kunkle, on letters-patent No. 58,294, granted to George W. Richardson, September 25th, 1866, for an improvement in safety-valves, and on other letters-patent, No. 85,963, granted to the same person, January 19th, 1869, for an improvement in safety-valves for steam-boilers or generators. These are the same two patents which were the subject-matter of the litigation involved in the case of *Consolidated Safety-Valve Company* v. *Crosby Steam-Gauge & Valve Company*, decided by this court at October Term, 1884, and

Digitized by Google

reported in 113 U.S. 157. The specifications and claims and drawings of the two patents are set forth fully in the report of that case. The patents were, both of them, held to be valid and to have been infringed.

The claim of the patent of 1866, "A safety-valve, with the circular or annular flange or lip *c c*, constructed in the manner, or substantially in the manner, shown, so as to operate as and for the purpose herein described," was construed as covering "a valve in which are combined an initial area, an additional area, a huddling chamber beneath the additional area, and a strictured orifice leading from the huddling chamber to the open air, the orifice being proportioned to the strength of the spring, as directed."

The claim of the patent of 1869, "The combination of the surface beyond the seat of the safety-valve, with the means herein described for regulating or adjusting the area of the passage for the escape of steam, substantially as and for the purpose described," was construed as covering "the combination with the surface of the huddling chamber, and the strictured orifice, of a screw-ring to be moved up or down to obstruct such orifice more or less, in the manner described."

The decree in the present case was made in January, 1883, and proceeded, as it states, on the ground that the defendant's valves did not infringe the patents. This also appears from the decision of the Circuit Court, reported in 14 Fed. Rep. 732. As the defendant's valves have no huddling chamber, and no strictured orifice leading from a huddling chamber to the open air, we are of opinion that they do not infringe either of the patents.

Decree affirmed.

Digitized by Google

WHITE v. DUNBAR.

APPEAL FROM THE CIRCUIT COURT OF THE UNITED STATES FOR THE EASTERN DISTRICT OF LOUISIANA.

Argued October 29, November 1, 1886. — Decided November 15, 1886.

The claim of the inventor in letters-patent must be construed according to its terms; and when its import is plain, resort cannot be had to the context for the purpose of enlarging it.

A reissue which materially enlarges the claim in the original letters-patent, and which was made five years after their issue, is held to be invalid.

This was a bill in equity to restrain infringement of letters-patent. The case is stated in the opinion of the court.

Mr. William G. Henderson for appellants. *Mr. Joseph P. Hornor*, *Mr. F. W. Baker*, and *Mr. C. H. Joyce* were with him on the brief.

Mr. Melville Church for appellees. *Mr. Joseph B. Church* was with him on the brief.

Mr. Justice Bradley delivered the opinion of the court.

This is a suit on a reissued patent. The appellees obtained a patent dated June 20th, 1876, for a method of preserving shrimps and other shell-fish by placing them in a bag or sack made of cotton, muslin, or other textile fabric, and then sealing them up in a metallic can, and subjecting them to a boiling process. In their specification they declare that the object of placing the shrimp in the bag is to keep them from coming in direct contact with the can, and thus prevent their discoloration and loss of flavor. They describe the process as follows:

"The shell having been removed from the shrimp in the usual manner, the fish is thrown into salt water of about six degrees, and there remains for an hour, more or less, and from thence to kettles filled with water and brought to a boiling heat, after which they are placed on dippers, and cooled and thoroughly rinsed with fresh cold water, and from which, so

Digitized by Google

soon as thoroughly dripped, in a moist condition, they are placed in the sack B, the same having been previously arranged in the can A, and without the addition of any salted or otherwise prepared liquid. So soon as the sack is filled, the mouth thereof being properly secured, the lid or head *a* is placed in position on the can A and immediately sealed.

"The cans are then subjected to a steam bath, or placed in kettles containing boiling water, and boiled for two hours at the highest temperature attainable, and which completes the process."

The claim is then stated, as follows:

"What we claim as new, and desire to secure by letters-patent, is—

"The herein-described method of preserving shrimps, &c., preventing their discoloration, which consists in placing textile fabric between the can and its contents, and then sealing the can and subjecting the same to a boiling process, substantially as and for the purpose specified."

In April, 1880, Pecor, one of the appellants, together with one Bartlett, obtained a patent for another method of preserving shrimps, by first lining the inside of the can with a coating of asphaltum cement, and then with paper coated with a solution of paraffine, or kindred substance; the can is then filled with shrimp, sealed up, and subjected to the boiling or steaming process, in the usual manner of canning vegetables and meats.

In April, 1881, the appellees surrendered their original patent, and applied for a reissue thereof, which was granted in December, 1881. In the new specification they describe their process to consist in; first, providing the can with a lining to prevent direct contact of the shrimps with the metal; and, second, placing them in the lined can while they are in a dry or moist condition and devoid of free liquid or gravy, sealing the can without adding any liquid to its contents, and cooking the contents of the can after sealing. They add that "there is nothing arbitrary about the peculiar form and construction of the textile fabric lining, as other forms and arrangements might be substituted therefor;" and again, "B is the lining, con-

Digitized by Google

structed preferably of cotton or muslin." The claim of the reissued patent is in the following words:

"What we claim as new, and desire to secure by letters-patent, is —

"As an improvement in the art of preserving shrimps in metal cans, the mode of preventing the discoloration of the shrimps, which consists in interposing between the metal can and the shrimps an enveloping material for the shrimps, which is not itself capable of discoloring the shrimps, and then sealing the can and subjecting the same and its contents to a boiling process, substantially as described."

In March, 1882, the appellants commenced the canning of shrimps, and in their answer state that all the business of canning shrimps that they have ever done has been under the authority of the patent granted to Pecor and Bartlett. They further describe the process used by them as follows:

"The common tin cans being ready for packing, three pieces of paper, previously boiled in paraffine wax or coated with same, are cut and placed in the can, so that one piece covers the bottom, another piece the sides, and a third piece the top of the contents when the can is filled; the shrimps are then picked raw, then washed and thoroughly cooked for about twenty minutes, until fit to eat; they are then placed in the cans, which are soldered, and then put into a steam retort without water, which is heated to 240° Fahrenheit, where they remain from two and a half to three hours, which process has the effect of condensing the air and liquids in the can, and exterminating any animal or vegetable life that may remain in the contents of the can, after which they are ready to be labelled and sold."

The process thus used by the appellants is claimed by the appellees to be an infringement of their reissued patent; they also contend that the claim of the reissued patent is no broader than that of the original, properly construed.

In the latter proposition we cannot concur. The claim in the original patent was for placing textile fabric between the can and its contents; whilst in the reissue it is for interposing between the metal can and the shrimps an enveloping material

Digitized by Google

for the shrimps. This is certainly, on its face, a very important enlargement of the claim; and we see nothing in the context of the specification in the original patent which could possibly give the claim so broad a construction. The description of the invention, throughout, specifies a textile fabric as the material to be interposed between the shrimp and the metallic can. It is true that the object of the invention is stated to be "to prevent the article to be preserved from coming in direct contact with the surface of the can." But the object of an invention is a very different thing from the invention itself. The object may be accomplished in many ways; the invention shows one way. Again, in describing the nature of the improvement, the patentees say:

"Primarily, our improvement consists in so placing a suitable textile fabric between the fish or other article of food to be preserved as to cause it to intervene so as to prevent, under all circumstances, any direct contact between the metallic surface of the can and its contents; and it is the employment of such textile fabric, in connection with the process hereinafter described, of treating the fish or other article, both before and after the same is placed in the can and sealed, which constitutes the nature or subject-matter of our present invention."

Then, in describing the apparatus used, referring to the figures annexed to the specification, (which are not necessary to the understanding of the description,) they say:

"In the accompanying drawing is illustrated, at Figure 1, a metallic can, such as is ordinarily used for articles of food which are offered to the trade in a canned state. Fig. 2 is a textile lining, which we propose usually to make, (although there is nothing arbitrary about the form, as other forms may be used,) in the form of a cylindrical bag or sack, the diameter of which, when filled, is to be such as will permit of its fitting snugly within the can.

"A is the metallic can; *a* its lid or cover. B is the bag or sack, constructed of cotton, muslin, or any other suitable textile fabric. Material of the cheapest and most inferior quality may be used, as the sole object of its use is to prevent the article to be preserved from coming in direct contact with the sur-

Digitized by Google

face of the can, and which contact with the metal, in the case of the shrimp, causes, during the process of boiling, and all along thereafter until the can is opened, a profuse precipitation of a black substance, generally believed to be sulphur, and which supposition is based upon the fact that the shrimp is said to possess a much larger proportion of sulphur than other shell-fish. The substance thus precipitated not only discolors the fish (shrimp), but detracts much from the color, freshness, and richness of its flavor. Now, practical experience has fully demonstrated the fact, that, by using a textile fabric as described, the precipitation of the substance alluded to is prevented, or at least does not appear either on the fabric or metal; hence the value and importance of this feature of our invention. *b*, Fig. 3, is a circular piece cut out of material similar to that of which the bag B is made, and which is inserted within the mouth of the latter after the same is filled with the fish or other article to be preserved.

"Such a can and lining, as herein described, are admirably adapted for the purpose attained by our present invention; but, as before stated, there is nothing arbitrary about the peculiar form or construction of the textile fabric lining, as other forms and arrangements might be substituted therefor without in any manner altering the principle of the invention."

We see nothing in all this to raise the slightest implication that the patentees were the inventors of the process of interposing any and every kind of lining between the cans and their contents; and when their claim is confined to a lining of textile fabric, it is tantamount to a declaration that they claimed nothing else.

Some persons seem to suppose that a claim in a patent is like a nose of wax which may be turned and twisted in any direction, by merely referring to the specification, so as to make it include something more than, or something different from, what its words express. The context may, undoubtedly, be resorted to, and often is resorted to, for the purpose of better understanding the meaning of the claim; but not for the purpose of changing it, and making it different from what

Digitized by Google

it is. The claim is a statutory requirement, prescribed for the very purpose of making the patentee define precisely what his invention is; and it is unjust to the public, as well as an evasion of the law, to construe it in a manner different from the plain import of its terms. This has been so often expressed in the opinions of this court that it is unnecessary to pursue the subject further. See *Keystone Bridge Co.* v. *Phœnix Iron Co.*, 95 U. S. 274, 278; *James* v. *Campbell*, 104 U. S. 356, 370.

We are clearly of opinion, therefore, that the original patent is not susceptible of the broad construction which the appellees would give to it; and that the reissued patent is a material expansion and enlargement of it. As such expansion appears to be the only object of the reissue, and as the application for the reissue was not made until nearly five years after the original was granted, the case comes within the ruling of *Miller* v. *Brass Company*, 104 U. S. 350, and subsequent cases to the same purport.

We attach no importance to the fact that between the date of the original patent and the application for the reissue, the patent to Pecor and Bartlett was granted. It is, indeed, quite apparent that the appellees applied for a reissue in consequence of that patent, and in order to prevent the canning of shrimps under it. The circumstance that other improvements and inventions, made after the issue of a patent, are often sought to be suppressed or appropriated by an unauthorized reissue, has sometimes been referred to for the purpose of illustrating the evil consequences of granting such reissues; but it adds nothing to their illegality. That is deduced from general principles of law as applied to the statutes authorizing reissues, and affecting the rights of the government and the public.

In our judgment the reissued patent in this case was unlawfully granted, and the bill should have been dismissed.

The decree of the Circuit Court is, therefore, reversed, and the case remanded, with directions to dismiss the bill.

Digitized by Google

DAINESE v. KENDALL.

APPEAL FROM THE SUPREME COURT OF THE DISTRICT OF COLUMBIA.

Argued October 22, 1886.— Decided November 15, 1886.

A decree, to be final for the purposes of appeal, must leave the case in such a condition that, if there be an affirmance in this court, the court below will have nothing to do but to execute the decree it has already entered.

This was a motion to dismiss. The case is stated in the opinion of the court.

Mr. Job Barnard for the motion. *Mr. James S. Edwards* was with him on the brief. *Mr. R. Ross Perry* for appellee Kendall.

Mr. J. W. Douglass opposing. *Mr. George L. Douglass* was with him on the brief.

Mr. Chief Justice Waite delivered the opinion of the court.

When this case was called for hearing a motion was made to dismiss because the decree appealed from was not a final decree. The facts are these:

The bill was filed by Dainese as the holder of one of three notes of Gordon, secured by a deed of trust from Gordon to McPherson, trustee, against the maker of the notes, the trustee, and John E. Kendall the holder of the other notes, praying:

1. That a sale which had been made of the trust property by McPherson, the trustee acting under the deed of trust, to Kendall, be set aside and a new sale ordered.

2. That Kendall be required to account for rents of the trust property which had been collected by him while in possession under a power of attorney from Gordon, authorizing him to receive the rents, and, after paying expenses and cer-

Digitized by Google

tain specified demands, apply the proceeds upon the debt secured by the trust; and

3. For an account of what was due to himself and to Kendall upon the notes they severally held, and that the proceeds of the sale which had been made, or if that should be set aside, of any that might thereafter be made, be divided between them in proportion to the amounts due them respectively.

Afterwards, and before any decree, McPherson filed a cross-bill praying an account between Dainese and Kendall, and an apportionment of the proceeds of the sale among them, and also an allowance to himself of commissions and counsel fees.

The court at special term set aside the sale, but before anything further was done Kendall appealed to the general term. At the general term the order of the special term was reversed, the sale ratified and confirmed, and the cause remanded to the special term "for further proceedings." When the case got back to the special term Kendall moved a reference to an auditor to make distribution of the proceeds of the sale, but while this motion was pending, and before anything else was done, Dainese took this appeal.

From this statement it is apparent that the decree appealed from is not a final decree within the meaning of that term as used in the statute allowing appeals to this court. The litigation of the parties on the merits of the case has not been terminated. An account of the rents collected by Kendall while in possession has not been taken; and the amounts due Dainese and Kendall respectively on the notes which they severally hold have not been ascertained. All this is necessary for the purposes of the relief asked for in the bill, and the cause was sent back from the general term for further proceedings on that account. The authorities are uniform to the effect that a decree to be final for the purposes of an appeal must leave the case in such a condition that if there be an affirmance here the court below will have nothing to do but to execute the decree it has already entered. *Bostwick* v. *Brinkerhoff*, 106 U. S. 3; *Grant* v. *Phœnix Ins. Co.*, 106

Digitized by Google

U. S. 429, 431; *St. Louis & Iron Mountain & Southern Railroad* v. *Southern Express Co.*, 108 U. S. 24, 28; *Ex parte Norton*, 108 U. S. 237, 242; *Mower* v. *Fletcher*, 114 U. S. 127.

The motion to dismiss is granted.

BUTTZ v. NORTHERN PACIFIC RAILROAD.

APPEAL FROM THE SUPREME COURT OF THE TERRITORY OF DAKOTA.

Argued October 26, 27, 1886. — Decided November 15, 1886.

The grant by the act of Congress of July 2, 1864, to the Northern Pacific Railroad Company, of lands to which the Indian title had not been extinguished, operated to convey the fee to the company, subject to the right of occupancy by the Indians.

The manner, time, and conditions of extinguishing such right of occupancy were exclusively matters for the consideration of the government, and could not be interfered with nor put in contest by private parties.

The agreement of the Sisseton and Wahpeton bands of Dakota or Sioux Indians for the relinquishment of their title was accepted on the part of the United States when it was approved by the Secretary of the Interior, on the 19th of June, 1873. That agreement stipulating to be binding from its date, May 19, 1873, and the Indians having retired from the lands to their reservations, the relinquishment of their title, so far as the United States are concerned, held to have then taken place.

Upon the definite location of the line of the railroad, on the 26th of May, 1873, the right of the company, freed from any incumbrance of the Indian title, immediately attached to the alternate sections; and no preemptive right could be initiated to the land, so long as the Indian title was unextinguished.

When the general route of the road provided for in section six of the Act of July 2, 1864, was fixed, and information thereof was given to the Land Department by the filing of a map thereof with the Secretary of the Interior, the statute withdrew from sale or preëmption the odd sections to the extent of forty miles on each side thereof; and, by way of precautionary notice to the public, an Executive withdrawal was a wise exercise of authority.

The general route may be considered as fixed, when its general course and direction are determined, after an actual examination of the country or from a knowledge of it, and it is designated by a line on a map, showing

Digitized by Google

the general features of the adjacent country and the places through or by which it will pass.

That part of section three of said act, which excepts from the grant lands reserved, sold, granted, or otherwise appropriated, and to which a preëmption and other rights and claims have not attached, when a map of definite location has been filed, does not include the Indian right of occupancy within such "other rights and claims;" nor does it include preëmptions where the sixth section declares that the land shall not be subject to preëmption.

The following is the case as stated by the court:

This was an action for the possession of a tract of land in the Territory of Dakota. The plaintiff below, the Northern Pacific Railroad Company, asserted title to the premises under a grant made by the act of Congress of July 2, 1864. The defendant, Peronto, asserted a right to preëmpt the premises by virtue of his settlement upon them under the preëmption law of September 4th, 1841, and that his right thereto was superior to that of the railroad company.

The action was brought into the District Court of the Territory. The complaint was in the usual form in such cases, alleging the incorporation of the plaintiff, its ownership in fee of the premises, (which are described,) and its right to their immediate possession, and that they are withheld by the defendant, with a prayer for judgment for their possession, and damages for the withholding.

The answer of the defendant admits the incorporation of the plaintiff, and that he is in possession of the premises, but denies the other allegations of the complaint. It then sets up as a further defence that he settled upon the premises on October 5th, 1871, and resided thereon, and the several steps taken by him to perfect a right of preëmption to them, and that he possessed the qualifications of a preëmptor under the laws of the United States. It concludes with a prayer that the title of the plaintiff be declared void, and that the plaintiff be enjoined from enforcing or attempting to enforce it; that the title be declared to be in the defendant; and that such other and further relief be granted as may be necessary to protect and preserve his rights.

Digitized by Google

The plaintiff replied, traversing the allegations of the answer; and the issues, by consent of the parties, were tried by the court, without a jury. The court found for the plaintiff, and gave judgment in its favor for the possession of the premises, with costs. On appeal to the Supreme Court of the Territory, the judgment was affirmed, and, by appeal from the latter judgment, the case was brought to this court. Since it was docketed here, the defendant, who was the appellant, died, and, by leave of the court, his executor, the devisee of his estate, has been substituted as appellant in his place.

The act of Congress of July 2d, 1864, is entitled "An act granting lands to aid in the construction of a railroad and telegraph line from Lake Superior to Puget Sound, on the Pacific Coast, by the northern route." 13 Stat. 365.

By the first section, the Northern Pacific Railroad Company was incorporated and authorized to equip and maintain the railroad and telegraph line mentioned, and was vested with all the powers and privileges necessary to carry into effect the purposes of the act.

By the third section, a grant of land was made to the company. Its language is: "That there be, and hereby is, granted to the Northern Pacific Railroad Company, its successors and assigns, for the purpose of aiding in the construction of said railroad and telegraph line to the Pacific coast, and to secure the safe and speedy transportation of the mails, troops, munitions of war, and public stores, over the route of said line of railway, every alternate section of public land, not mineral, designated by odd numbers, to the amount of twenty alternate sections per mile, on each side of said railroad line, as said company may adopt, through the territories of the United States, and ten alternate sections of land per mile on each side of said railroad whenever it passes through any state, and whenever on the line thereof, the United States have full title, not reserved, sold, granted, or otherwise appropriated, and free from preëmption, or other claims or rights, at the time the line of said road is definitely fixed, and a plat thereof filed in the office of the commissioner of the general land office."

By the sixth section, it was enacted "that the President of

Digitized by Google

the United States shall cause the lands to be surveyed for forty miles in width on both sides of the entire line of said road after the general route shall be fixed, and as fast as may be required by the construction of said railroad; and the odd sections of land hereby granted shall not be liable to sale or entry or preëmption before or after they are surveyed, except by said company, as provided in this act; but the provisions of the act of September, eighteen hundred and forty-one, granting preëmption rights, and the acts amendatory thereof, and of the act entitled 'An act to secure homesteads to actual settlers on the public domain,' approved May twenty, eighteen hundred and sixty-two, shall be, and the same are hereby, extended to all other lands on the line of said road when surveyed, excepting those hereby granted to said company. And the reserved alternate sections shall not be sold by the government at a price less than two dollars and fifty cents per acre when offered for sale."

At the time this act was passed, the land in controversy, and other lands covered by the grant, were in the occupation of the Sisseton and Wahpeton Bands of Dakota or Sioux Indians; and the second section provided that the United States should extinguish, as rapidly as might be consistent with public policy and the welfare of the Indians, their title to all lands "falling under the operation of this act and acquired in the donation to the road."

On the 19th of February, 1867, a treaty was concluded between the United States and these Bands, which was ratified on the 15th of April and proclaimed on the 2d of May of that year, 15 Stat. 505, in the second article of which the Bands ceded "to the United States the right to construct wagon roads, railroads, mail stations, telegraph lines, and such other public improvements as the interest of the government may require, over and across the lands claimed by said bands, (including their reservation as hereinafter designated,) over any route or routes that may be selected by authority of the government, said lands so claimed being bounded on the south and east by the treaty line of 1851 and the Red river of the North to the mouth of Goose river, on the north by the Goose

Digitized by Google

river and a line running from the source thereof by the most westerly point of Devil's lake to the Chief's Bluff at the head of James river, and on the west by the James river to the mouth of Mocasin river, and thence to Kampeska lake." By articles III and IV certain lands were set apart as permanent reservations for the Indians — one of which was known as Lake Travers reservation, and the other as Devil's lake reservation — so called because their boundary lines commenced respectively at those lakes.

On the 7th of June, 1872, Congress passed an act "to quiet the title to certain lands in Dakota Territory," which provided that it should be the duty of the Secretary of the Interior to examine and report to Congress what title or interest the Sisseton and Wahpeton Bands of Sioux Indians had to any portion of the land mentioned and described in the second article of that treaty, except the reservations named; and whether any, and if any, what, compensation ought, in justice and equity, to be made to said bands for the extinguishment of whatever title they might have to said lands. 17 Stat. 281.

Under this act, the Secretary of the Interior appointed three persons as commissioners to treat with the Indians for the relinquishment of their title to the land. On the 20th of September, 1872, they made an agreement or treaty with the Bands for such relinquishment. This agreement recited the conclusion of the treaty of 1867, and the cession by it to the United States of certain privileges and rights supposed to belong to said Bands in the territory described in the second article of the treaty; and that it was desirable that all the territory, except that portion comprised in certain reservations described in articles III and IV of the treaty, should be ceded absolutely to the United States, upon such considerations as in justice and equity should be paid therefor; and that the lands were no longer available to the Indians for the purposes of the chase, and their value or consideration was essentially necessary to enable them to cultivate portions of the permanent reservations, and become self-supporting by the cultivation of the soil and other pursuits of husbandry. "Therefore," the agreement continues, "the said Bands represented in said

Digitized by Google

treaty, and parties thereto, by their chiefs and headmen, now assembled in council, do propose to M. N. Adams, William H. Forbes, and James Smith, Jr., commissioners on behalf of the United States, as follows:

"First. To sell, cede, and relinquish to the United States all their right, title, and interest in and to all lands and territory particularly described in article II of said treaty, as well as all lands in the Territory of Dakota to which they have title or interest, excepting the said tracts particularly described and bounded in articles III and IV of said treaty, which last-named tracts and territory are expressly reserved as permanent reservation for occupancy and cultivation, as contemplated by articles VIII, IX, and X of said treaty."

"Second. That, in consideration of said cession and relinquishment, the United States should advance and pay annually, for the term of ten years from and after the acceptance by the United States of the propositions herein submitted, eighty thousand ($80,000) dollars, to be expended, under the direction of the President of the United States, on the plan and in accordance with the provisions of the treaty aforesaid, dated February 19, 1867, for goods and provisions, for the erection of manual labor and public schools, and to the erection of mills, blacksmith shops, and other work shops, and to aid in opening farms, breaking land, and fencing the same, and in furnishing agricultural implements, oxen, and milk cows, and such other beneficial objects as may be deemed most conducive to the prosperity and happiness of the Sisseton and Wahpeton Bands of Dakota or Sioux Indians, entitled thereto, according to the said treaty of February 19, 1867."

This agreement contained seven other articles, some of which had provisions of great value to the Indians. It does not appear that it was ever presented to the Senate of the United States for ratification, but it was communicated to Congress by the Secretary of the Interior; and in the Indian appropriation act of February 14th, 1873, an amount was conditionally appropriated to meet the first instalment of the sum provided by the second article — eighty thousand dollars. The condition was that the amount should not be expended

Digitized by Google

until that agreement, amended by the exclusion of all the articles except the first two, should be ratified by the Indians. The agreement, exclusive of those articles, was confirmed by Congress. 17 Stat. 456.

The ratification of the agreement, as amended, was obtained from the Indians at the two reservations; from those on one reservation, on May 2, 1873, and from those on the other reservation on the 19th of the same month. This ratification was accepted and approved by the Secretary of the Interior on the 19th of June, 1873, and the expenditure of the appropriation made was authorized. No approval of the agreement was had by Congress until the passage of the Indian appropriation act of June 22d, 1874, by which it was confirmed and an appropriation made to meet the second instalment of the consideration stipulated.

It appears by the findings of the court, that some time in the fall of 1871, under the act of Congress mentioned, and other acts and resolutions relating to the same subject, the Railroad Company commenced work on that part of its line of road beginning on the westerly bank of the Red River of the North (which was the eastern boundary of Dakota), and extending westerly through and across what was afterwards shown by the public surveys to be the section of land of which the premises in controversy form a part, namely, section 7 in township 139 and range 48. It also caused all that part of its line of road thus located to be graded and prepared for its superstructure; and in June following the superstructure and the iron rails were laid, and that part of the road was completed which crossed the section named, and ever since the road has been maintained and operated.

On the 21st of February, 1872, the company filed in the office of the Secretary of the Interior a map showing that part of the general route of the road beginning at the westerly bank of the Red River of the North, and extending westerly to James River, in Dakota Territory. On the 30th of March following, the acting Commissioner of the General Land Office forwarded to the register and receiver of the Pembina land office, within the limits of which the tract of land in contro-

Digitized by Google

versy was situated, a description of the designated route, and, by order of the Secretary of the Interior, directed them to withhold from sale or location, preëmption, or homestead entry, all the surveyed and unsurveyed odd numbered sections of public lands falling within the limits of forty miles, as designated on the map, and stated that this order would take effect from the date of its receipt by them.

The order, with the diagram, was received by them April 20th, 1872. The diagram represented the route of the road as passing over and across the section of land in question. The order of withdrawal thus given was never afterwards revoked.

On May 26th, 1873, the company filed in the office of the Commissioner of the General Land Office a map, showing the definite location of that part of its line of road extending from the Red River of the North to the Missouri River in Dakota Territory. All that portion of this definite location, from the Red River to the west line of the section named, was the same as that made in 1871. On the 11th of June, 1873, the acting Commissioner of the General Land Office addressed a letter to the local register and receiver, informing them of the filing of this map of definite location, and transmitted to them a diagram showing the limits of the land grant along said line, and also the limits of the withdrawal ordered on March 30th, 1872, upon a designated line; and directed them to withhold from sale or entry all the odd numbered sections, both surveyed and unsurveyed, falling within those limits. This letter, with the diagram referred to, was received at the Pembina land office on June 24th, 1873.

Soon after the execution of the amended agreement with the Indians, mentioned above, which was approved by the Secretary of the Interior on the 19th of June, 1873, the government land surveys of the region embraced in it were completed, and plats thereof were filed in the local land office. Those surveys show that the premises in controversy constitute a portion of the odd section number seven, which was granted to the railway company.

The defendant, Peronto, settled, as already stated, upon

Digitized by Google

that section on October 5th, 1871. It is found by the court that he had all the qualifications of a preëmptor, and entered upon the land with the intention of securing a preëmption right to it under the laws of the United States, and built a house upon it, in which he resided. On the 11th of August, 1873, he presented his declaratory statement to the register and receiver of the local land office, stating his intention to claim a preëmption right to a portion of the section (describing it) and his settlement thereon in October, 1871. This declaratory statement was presented within three months after the township plats, showing the government surveys, had been filed in the local land office. The register and receiver refused to file it, for the alleged reason that the land therein described was the land of the Railroad Company, as shown by its diagram filed in the Department of the Interior, February 21, 1872, and that his alleged prior settlement was illegal, the lands not being subject to preëmption settlement by reason of the Indian treaty. The defendant thereupon appealed from this ruling to the Commissioner of the General Land Office, by whom, on the 14th of February, 1874, it was approved and confirmed. The defendant then appealed to the Secretary of the Interior, and he approved the decision of the Commissioner.

Mr. Albert G. Riddle and *Mr. Henry E. Davis* for appellant. *Mr. James E. Padgett* was with them on their brief.

I. At the date of the passage of the act of July 2, 1864, the lands in controversy were Indian lands. Act of June 30, 1834, 4 Stat. 729. They were not "public lands," nor subjected to the operation of acts dealing with "public lands," but remained "Indian lands." *Leavenworth, Lawrence & Galveston Railroad* v. *United States*, 92 U. S. 733, 742; *United States* v. *Forty-Three Gallons Whiskey*, 93 U. S. 188; *Bates* v. *Clark*, 95 U. S. 204. The right of Indians to the lands they occupy is unquestioned until the title is extinguished by voluntary cession. *Cherokee Nation* v. *Georgia*, 5 Pet. 1: and under the act of 1834 is as sacred as the title

Digitized by Google

of the United States to the fee. *United States* v. *Cook*, 19 Wall. 591. Whenever a tract of public land is legally appropriated to any purpose, it is thereby severed from the mass of public lands, so that no subsequent law or proclamation or sale will be construed to embrace it. *Wilcox* v. *Jackson*, 13 Pet. 498, 513; *Polk* v. *Wendall*, 9 Cranch, 87; *Vincennes University* v. *Indiana*, 14 How. 268. This principle applies with especial force to Indian reservations. For all practical purposes Indians own their lands. *United States* v. *Payne*, 2 McCrary, 289; *Dubuque & Sioux City Railroad* v. *Des Moines Valley Railroad*, 109 U. S. 329, 334. Lands forming part of an Indian grant at its date are excepted from its operation. *Leavenworth, Lawrence & Galveston Railroad* v. *United States*, above cited; *Clark* v. *Smith*, 13 Pet. 195; *Kansas Pacific Railroad* v. *Atchison &c. Railroad*, 112 U. S. 414, 422. Unless, therefore, the act making the grant to the Northern Pacific Company contains "specific language, leaving no room for doubt as to the legislative will," the lands in controversy, being Indian lands at the date of the grant, were excluded from the operation thereof.

II. That act contained no such provision. It did contain a provision that the United States should extinguish, as rapidly as may be consistent with public policy and the welfare of the Indians, the Indian titles to all lands falling under the operation of the act and acquired in the donation named therein. It was evident that the route indicated in the act must, of necessity, pass through much of the wild Indian lands of the northwest: and, as the construction of the road would make it expedient to open up that territory, it was but just that the company itself should, as far as possible and proper, be put in the same position as other companies receiving grants of lands, that is to say: to be given as much of its grant as possible adjacent to its road. From such considerations Congress thought that the usual complete exclusion of Indian lands would operate harshly; wherefore the provision in question was inserted in the act: with the purpose of enabling the company's grant to attach to what at the date of the act were Indian lands, if in proper condition to pass at the date of

Digitized by Google

definite location, as prescribed by the act; or, if not in condition so to pass, to furnish the measure of indemnity in other lands for the lands so, as it were, lost. As was said in the *Leavenworth, Lawrence & Galveston Railroad* v. *United States*, in order to negative the idea of exclusion, "this was necessary, although the road ran through territory occupied by wild tribes." 92 U. S. 744. But further than this the provision was not intended to go, and does not go, except that it also holds out a promise on the part of the government to do what might be deemed expedient to put the Indian lands, at the time of the definite location, in the condition requisite to pass under the grant, viz., in such condition that the United States should have "full title" thereto, as defined in the act. *Newhall* v. *Sanger*, 92 U. S. 761; *Wolcott* v. *Des Moines Co.* 5 Wall. 681. These views are greatly strengthened by the dealings of the United States with the Sisseton and Wahpeton Indians. See 15 Stat. 506; 16 Stat. 378; and 17 Stat. 281.

III. Assuming it to be established that the act of 1864 did not grant to the company any Indian lands to which the Indian title should not have been extinguished at the time the line of the road might be definitely fixed; and that the undertaking to extinguish the Indian title was intended only to put as much of the Indian lands as the United States should think proper in condition to pass under the grant, it is next contended that, at the time the line of the road was definitely fixed, the lands in controversy had not been put into condition so to pass. *Van Wyck* v. *Knevals*, 106 U. S. 360, 366–8; *Kansas Pacific Railway* v. *Dunmeyer*, 113 U. S. 629, 634; *Walden* v. *Knevals*, 114 U. S. 373, 374–6; *Northern Pacific Railroad* v. *Traill County*, 115 U. S. 600; *Stark* v. *Starrs*, 6 Wall. 402, 418; *Railroad Co.* v. *Baldwin*, 103 U. S. 426; *Winona & St. Peter Railroad* v. *Barney*, 113 U. S. 618.

IV. If the lands were subject to preëmption, the record leaves no doubt of Peronto's right to enter; and this right to the lands could not be prejudiced by the refusal of the local officers to receive his declaratory statement duly presented. *Frisbie* v. *Whitney*, 9 Wall. 187. *Shepley* v. *Cowan*, 91 U. S. 330. And if the action of the land officers, by erroneously

Digitized by Google

construing the law, thus deprived him of a substantial right, his title to remedy in equity is undoubted. *Minnesota* v. *Batchelder*, 1 Wall. 109; *Samson* v. *Smiley*, 13 Wall. 91; *Ferguson* v. *McLaughlin*, 96 U. S. 174; *Moore* v. *Robbins*, 96 U. S. 530; and all doubts are to be resolved against the company. *Rice* v. *Railroad Co.*, 1 Black, 358, 380; *Leavenworth, Lawrence & Galveston Railroad* v. *United States*, supra.

Mr. W. P. Clough for appellee.

Mr. Justice Field, after stating the case, delivered the opinion of the court, as follows:

The land in controversy and other lands in Dakota, through which the Northern Pacific Railroad was to be constructed, was within what is known as Indian country. At the time the act of July 2d, 1864, was passed, the title of the Indian tribes was not extinguished. But that fact did not prevent the grant of Congress from operating to pass the fee of the land to the company. The fee was in the United States. The Indians had merely a right of occupancy, a right to use the land subject to the dominion and control of the government. The grant conveyed the fee subject to this right of occupancy. The Railroad Company took the property with this incumbrance. The right of the Indians, it is true, could not be interfered with or determined except by the United States. No private individual could invade it, and the manner, time, and conditions of its extinguishment were matters solely for the consideration of the government, and are not open to contestation in the judicial tribunals. As we said in *Beecher* v. *Wetherby*, 95 U. S. 517, 525: "It is to be presumed that in this matter the United States would be governed by such considerations of justice as would control a Christian people in their treatment of an ignorant and dependent race. Be that as it may, the propriety or justice of their action towards the Indians with respect to their lands is a question of governmental policy, and is not a matter open to discussion in a controversy between third parties, neither of whom de-

Digitized by Google

rives title from the Indians. The right of the United States to dispose of the fee of lands occupied by them has always been recognized by this court from the foundation of the government." In support of this doctrine several authorities were cited in that case.

In *Johnson* v. *McIntosh*, 8 Wheat. 543, 575, which was here in 1823, the court, speaking by Chief Justice Marshall, stated the origin of this doctrine of the ultimate title and dominion in the United States. It was this: that, upon the discovery of America, the nations of Europe were anxious to appropriate as much of the country as possible, and, to avoid contests and conflicting settlements among themselves, they established the principle that discovery gave title to the government by whose subjects or by whose authority it was made, against all other governments. This exclusion of other governments necessarily gave to the discovering nation the sole right of acquiring the soil from the natives, and of establishing settlements upon it. It followed that the relations which should exist between the discoverer and the natives were to be regulated only by themselves. No other nation could interfere between them. The Chief Justice remarked that "the potentates of the old world found no difficulty in convincing themselves that they made ample compensation to the inhabitants of the new, by bestowing on them civilization and Christianity in exchange for unlimited independence." Whilst thus claiming a right to acquire and dispose of the soil, the discoverers recognized a right of occupancy or a usufructuary right in the natives. They accordingly made grants of lands occupied by the Indians, and these grants were held to convey a title to the grantees, subject only to the Indian right of occupancy. The Chief Justice adds, that the history of America, from its discovery to the present day, proves the universal recognition of this principle.

In *Clark* v. *Smith*, 13 Pet. 195, 201, which was here in 1839, the patent under which the complainant became the owner in fee of certain lands was issued by the Commonwealth of Kentucky in 1795, when the lands were in possession of the Chickasaw Indians, whose title was not extinguished until 1819. It

Digitized by Google

was objected that the patent was void because it was issued for lands within a country claimed by Indians, but the court replied, "That the colonial charters, a great portion of the individual grants by the proprietary and royal governments, and a still greater portion by the States of this Union after the revolution, were made for lands within the Indian hunting-grounds. North Carolina and Virginia, to a great extent, paid their officers and soldiers of the revolutionary war by such grants; and extinguished the arrears due the army by similar means. It was one of the great resources that sustained the war, not only by these States but by others. The ultimate fee (encumbered with the Indian right of occupancy) was in the crown previous to the revolution, and in the States of the Union afterwards, and subject to grant. This right of occupancy was protected by the political power and respected by the courts until extinguished; when the patentee took the unencumbered fee. So this court, and the State courts, have uniformly and often holden."

In the grant to the Railroad Company now before us, Congress was not unmindful of the title of the Indians to the lands granted, and it stipulated for its extinguishment by the United States as rapidly as might be consistent with public policy and the welfare of the Indians.

In compliance with the pledge thus given, the United States took steps, first, to obtain from the Indians the right to construct railroads, wagon roads, and telegraph lines across their lands, and to make such other improvements upon them as the interests of the government might require, and afterwards to obtain a cession of their entire title.

The right to construct railroads and telegraph lines across their lands was secured by the treaty concluded on the 19th of February, 1867, ratified on the 15th of April, and proclaimed on the 2d of May of that year. The right was in terms ceded to the United States, but the cession must be construed to authorize any one deriving title from the United States to exercise the same right. 15 Stat. 505.

For the relinquishment of the entire title of the Indians to the lands, an agreement was made by commissioners appointed

Digitized by Google

by the Secretary of the Interior, under the act of Congress of June 7, 1872. That agreement in form was merely a proposition by the Indians to cede their title, upon certain money considerations to be paid, and certain acts to be performed by the United States. Congress declined to approve of it in its entirety, but expressed an approval of it so far as it related to the cession of the title of the Indians upon the money considerations named. It refused, however, to allow an appropriation made to meet the first instalment of the money consideration to be expended, except upon the condition that the Indians should abandon the other provisions and ratify the agreement thus modified. The Indians on the different reservations accepted the condition and ratified the agreement as modified — those on one reservation on May 2, 1873, and those on the other on the 19th of the same month.

The agreement, thus ratified, was forwarded to the Secretary of the Interior, and was approved by him on the 19th of June following; and on June 22, 1874, Congress approved it in the Indian appropriation act of that year, when it also provided for the payment of the second instalment of the money consideration.

This modified agreement must be considered as accepted, on the part of the United States, when it was approved by the Secretary of the Interior. Some official recognition was necessary to satisfy those who might be interested as to the good faith of the alleged consent of the Indians; whether the parties acting nominally in their behalf really represented them, and whether their assent was freely given after full knowledge of the import of the legislation of Congress. Proof of these facts was not to rest in the recollection of witnesses, but in the official action of the officers of the government, or in the legislation of Congress. The agreement, however, on the part of the Indians was only to cede their title; it was not a cession in terms by them. The officers of the Land Department, however, treated it as an actual cession of title from its date. The Indians had then retired to the reservations set apart for them by the treaty of 1867, thus giving up the occupancy of the other lands. The relinquishment thus made was

Digitized by Google

as effectual as a formal act of cession. Their right of occupancy was, in effect, abandoned, and full consideration for it being afterwards paid, it could not be resumed. The agreement in terms provided that it should be binding from its ratification. So, therefore, considered in connection with the actual retirement of the Indians from the land, it may properly be treated as establishing the extinguishment of their title from its date, so far as the United States are concerned. The definite location of the line of railroad was subsequently made by the company, and a map of it filed with the Secretary of the Interior. The right of the company, freed from any incumbrance of the Indian title, immediately attached to the alternate sections, a portion of one of which constitutes the premises in controversy. The defendant could not initiate any preëmptive right to the land so long as the Indian title remained unextinguished. The act of Congress excludes lands in that condition from preëmption. Rev. Stat. § 2257.

If we are mistaken in this view, and the relinquishment of the right of occupancy by the Indians is not to be deemed effected until the agreement was ratified by Congress in June, 1874, notwithstanding their actual retirement from the lands, the result would not be changed. The right of the company to the odd sections within the limits of its grant, covered by the Indian claim, did not depend upon the extinguishment of that claim before the definite location of the line of the road was made, and a map thereof filed with the Commissioner of the General Land Office. The provisions of the third section, limiting the grant to lands to which the United States had then full title, they not having been reserved, sold, granted, or otherwise appropriated, and being free from preëmption or other claims or rights, did not exclude from the grant Indian lands, not thus reserved, sold, or appropriated, which were subject simply to their right of occupancy. Nearly all the lands in the Territory of Dakota, and, indeed, a large, if not the greater, portion of the lands along the entire route to Puget Sound on which the road of the company was to be constructed, was subject to this right of occupancy by the Indians. With knowledge of their title and its impediment

Digitized by Google

to the use of the lands by the company, Congress made the grant, with a stipulation to extinguish the title. It would be a strange conclusion to hold that the failure of the United States to secure the extinguishment at the time when it should first become possible to identify the tracts granted, operated to recall the pledge and to defeat the grant. It would require very clear language to justify a conclusion so repugnant to the purposes of Congress expressed in other parts of the act. The only limitation upon the action of the United States with respect to the title of the Indians was that imposed by the act of Congress, that they would extinguish the title as rapidly as might be "consistent with public policy and the welfare of said Indians." Subject only to that condition, so far as the Indian title was concerned, the grant passed the fee to the company. In our judgment, the claims and rights mentioned in the third section are such as are asserted to the lands by other parties than Indians having only a right of occupancy.

Assuming that the extinguishment of the Indian title to the lands in controversy may, so far as any claim to them against the United States is concerned, be held to have taken place at the date of the amended agreement — taking the last date, when the Indians on the second reservation ratified it — the defendant did not acquire any right of preëmption by his continued settlement afterwards. The act of Congress not only contemplates the filing by the company, in the office of the Commissioner of the General Land Office, of a map showing the definite location of the line of its road, and limits the grant to such alternate odd sections as have not, at that time, been reserved, sold, granted, or otherwise appropriated, and are free from preëmption, grant, or other claims or rights; but it also contemplates a preliminary designation of the general route of the road, and the exclusion from sale, entry, or preëmption of the adjoining odd sections within forty miles on each side, until the definite location is made. The third section declares that after the general route shall be fixed, the President shall cause the lands to be surveyed for forty miles in width on both sides of the entire line as fast as may be required for the construction of the road,

Digitized by Google

and that the odd sections granted shall not be liable to sale, entry, or preëmption, before or after they are surveyed, except by the company. The general route may be considered as fixed when its general course and direction are determined after an actual examination of the country or from a knowledge of it, and is designated by a line on a map showing the general features of the adjacent country and the places through or by which it will pass. The officers of the Land Department are expected to exercise supervision over the matter so as to require good faith on the part of the company in designating the general route, and not to accept an arbitrary and capricious selection of the line irrespective of the character of the country through which the road is to be constructed. When the general route of the road is thus fixed in good faith, and information thereof given to the Land Department by filing the map thereof with the Commissioner of the General Land Office, or the Secretary of the Interior, the law withdraws from sale or preëmption the odd sections to the extent of forty miles on each side. The object of the law in this particular is plain: it is to preserve the land for the company to which, in aid of the construction of the road, it is granted. Although the act does not require the officers of the Land Department to give notice to the local land officers of the withdrawal of the odd sections from sale or preëmption, it has been the practice of the Department in such cases, to formally withdraw them. It cannot be otherwise than the exercise of a wise precaution by the Department to give such information to the local land officers as may serve to guide aright those seeking settlements on the public lands; and thus prevent settlements and expenditures connected with them which would afterwards prove to be useless.

Nor is there anything inconsistent with this view of the sixth section as to the general route, in the clause in the third section making the grant operative only upon such odd sections as have not been reserved, sold, granted, or otherwise appropriated, and to which preëmption and other rights and claims have not attached, when a map of the definite location has been filed. The third section does not embrace sales and pre-

Digitized by Google

emptions in cases where the sixth section declares that the land shall not be subject to sale or preëmption. The two sections must be so construed as to give effect to both, if that be practicable.

In the present case, the general route of the road was indicated by the map filed in the office of the Secretary of the Interior on the 21st of February, 1872. It does not appear that any objection was made to the sufficiency of the map, or to the route designated, in any particular. Accordingly, on the 30th of March, 1872, the Commissioner of the General Land Office transmitted a diagram or map, showing this route, to the officers of the local land office in Dakota, and by direction of the Secretary ordered them to withhold from sale, location, preëmption, or homestead entry all surveyed and unsurveyed odd numbered sections of public land falling within the limits of forty miles, as designated on the map.

This notification did not add to the force of the act itself, but it gave notice to all parties seeking to make a preëmption settlement that lands within certain defined limits might be appropriated for the road. At that time the lands were subject to the Indian title. The defendant could not, therefore, as already stated, have then initiated any preëmption right by his settlement; and the law cut him off from any subsequent preëmption. The withdrawal of the odd sections mentioned from sale or preëmption, by the sixth section of the act, after the general route of the road was fixed, in the manner stated, was never annulled.

It follows that the defendant could never afterwards acquire any rights against the company by his settlement.

Judgment affirmed.

Digitized by Google

Syllabus.

OREGON *v.* JENNINGS.

ERROR TO THE CIRCUIT COURT OF THE UNITED STATES FOR THE NORTHERN DISTRICT OF ILLINOIS.

Submitted October 19, 1886. — Decided November 15, 1886.

Bonds issued by a town in Illinois, signed by its supervisor and town clerk, as a donation to a railroad company, stated that the faith, credit, and property of the town were thereby pledged, "under authority of" an Act of the General Assembly of the State, giving its title and date, and each bond also stated that it and other bonds, giving their numbers and amounts, were "the only bonds issued by said town" "under and by virtue of said Act." The Act prescribed the general route of the road, and authorized the town to make a donation to the company, to aid in constructing and equipping the road, if the donation should be voted for as prescribed. It provided for a written application by voters to the town clerk to have an election held, and the giving by him of notice of the election; that the election should "be held and conducted and return thereof made as is provided by law;" and that, if a majority of the legal voters voting should vote for the donation, the town should, "by its proper corporate authorities," make the donation, as should "be determined at said election," and should issue to the company its bonds, "signed by the supervisor and countersigned by the clerk," and should, "by its proper corporate authority," levy an annual tax to pay interest and principal. The application was made, and the notice given, and the election was held and presided over, not by the election judges of the town, but by a moderator and the town clerk, in the manner required for the election of town officers, and resulted in a majority for the donation. The terms of the vote were that the bonds should not be issued, and the vote should be void, unless the road was completed by a day specified. The road was not completed by that day. The supervisor and one of the two justices of the town having resigned, the other justice and the town clerk, on the day before an election for a justice was to be held, appointed a new supervisor, ante-dating the appointment papers more than three months, to the day after the supervisor resigned, and the new supervisor, and the town clerk, on the same day, signed the bonds and delivered them to the company. The next day a new justice and a new supervisor were elected by the people. In a suit against the town, to recover on coupons cut from the bonds, by a *bona fide* holder of the bonds and coupons for a valuable consideration, without notice, it was set up in defence, that the officers of the company conspired with the justice and the town clerk, and their appointee, to have the bonds issued before a new supervisor should be elected by the people: *Held,*

Digitized by Google

Statement of Facts.

(1) The bonds were not void, as having been executed through "fraud or circumvention," under the statute of Illinois, Gross' Stat., 1869, vol. 1, 3d ed., c. 73, p. 462, § 11.
(2) The appointment of the supervisor was valid.
(3) The bonds were issued in compliance with a vote of the people held prior to the adoption of the Illinois Constitution of 1870, in pursuance of a law providing therefor, within the meaning of section 12, of article 9, of that Constitution, although the condition as to the completion of the road was not complied with, because, as against the plaintiff, the recitals in the bonds were made by officers entrusted under the statute, with the duty of determining whether the condition had been complied with, and the town was thereby estopped from asserting the contrary.
(4) The election was properly held, though presided over by a moderator, and the donation was, therefore, authorized under existing laws, by a vote prior to the adoption of additional section or article 2 to the Constitution of Illinois, within the meaning of that section.

This was an action at law brought in the Circuit Court of the United States for the Northern District of Illinois, by Eliza Jennings, against the town of Oregon, a municipal corporation in the county of Ogle, and State of Illinois, to recover $13,510, the amount payable by 193 coupons of $70 each, cut from 24 bonds for $1000 each, purporting to have been issued by that town. The following is a copy of one of the bonds, all being alike except as to the number, and the time when due:

"UNITED STATES OF AMERICA.

No. 29. *State of Illinois, County of Ogle.* $1000.

OREGON TOWN BOND.

Know all men by these presents, that the town of Oregon, in the county of Ogle, and State of Illinois, is indebted to the Ogle and Carroll County Railroad Company in the full and just sum of one thousand dollars, which sum of money said town agrees and promises to pay on or before the first day of July, 1883, to the said Ogle and Carroll County Railroad Company, or bearer, with interest at the rate of seven per cent. per annum, payable annually, on the first day of July, at the office of the Farmers' Loan and Trust Company of New York, in the City of New York, upon the delivery of the coupons severally hereto annexed, for which payment of principal and

Digitized by Google

interest, well and truly to be made, the faith, credit, and property of said town of Oregon are hereby solemnly pledged, under authority of an Act of the General Assembly of the State of Illinois, entitled 'An Act to amend an Act entitled An Act to incorporate the Ogle and Carroll County Railroad Company,' which said Act was approved March 30, 1869.

This bond is one of a series, numbering from 21 to 60, inclusive, for $1000 each, which bonds, so numbered, together with another series numbered from 1 to 20, inclusive, for $500 each, are the only bonds issued by said town of Oregon under and by virtue of said Act.

In witness whereof, the supervisor and town clerk of the said town of Oregon have hereunto set their hands, this thirty first day of December, A.D. 1870.

FRED. H. MARSH, *Town Clerk.* E. S. POTTER, *Supervisor.*"

The date in each bond, "thirty first day of December, A.D., 1870," is lithographed, like the body of the bond.

On the back of each bond is the following certificate:

"AUDITOR'S OFFICE, Illinois,
SPRINGFIELD, *June* 5, 1871.

I, Charles E. Lippincott, Auditor of Public Accounts of the State of Illinois, do hereby certify that the within bond has been registered in this office this day, pursuant to the provisions of an Act entitled 'An Act to fund and provide for paying the railroad debts of counties, townships, cities and towns,' in force April 16, 1869.

In testimony whereof, I have hereunto subscribed my name, and affixed the seal of my office the day and year aforesaid.

[SEAL.] C. E. LIPPINCOTT, *Auditor, P. A.*"

The coupons are in the following form, varying as to number of bond and date of payment:

"State of Illinois, County of Ogle. The Town of Oregon will pay to the Ogle and Carroll County Railroad Company, or bearer, Seventy Dollars at the office of the Farmers' Loan

Digitized by Google

& Trust Company of New York, in the City of New York, on the first day of July, 1873, on presentation, being one year's interest on bond No. 29.

F. H. MARSH, *Clerk.* E. S. POTTER, *Supervisor.*"

The action was tried by a jury, which, under the instruction of the court to do so, found a verdict for the plaintiff, for $20,823.68, and a judgment in her favor was rendered for that amount, with costs. The defendant sued out a writ of error.

On the 30th of March, 1869, the Legislature of Illinois passed an Act, Private Laws of Illinois, of 1869, vol. 3, p. 324, with the title set forth in the bonds, and providing as follows:

"SECTION 1. *Be it enacted by the People of the State of Illinois, represented in the General Assembly,* That the several Acts entitled 'An Act to incorporate the Ogle and Carroll County Railroad Company,' approved February 18, 1857, and the Act entitled 'An Act to amend an Act entitled An Act to incorporate the Ogle and Carroll County Railroad Company,' approved February 24, 1859, be and they are hereby so amended that the said railroad company shall be authorized and empowered to construct, maintain, and operate their said railroad, with such appendages as may be deemed necessary by the directors, in accordance with the following provisions.

§ 2. That the first division of said road shall commence on the east bank of Rock River, opposite the town of Oregon, in said county of Ogle; from thence, on the most eligible route, to a connection with the Chicago and Northwestern Railway, or with any other railroad leading to the City of Chicago, and the second division commencing at said point, opposite the said town of Oregon, and running thence, in a westerly direction, on the most eligible route, to the Mississippi River."

"§ 5. That the several towns, villages, and cities, organized or incorporated under any laws of this State, along or near the route of said railroad, as authorized to be constructed under the original Act and amendment thereto or under this Act, or that are in anywise interested in having said road or any branch or division thereof constructed, may, in their corporate capacities, subscribe to the stock of said company, or may

Digitized by Google

make donations thereto, or may lend its or their credit to said company, to aid in constructing and equipping said road, or any division or branch thereof: *Provided*, That no such subscription, donation, or loan shall be made until the same shall be voted for as hereinafter provided.

§ 6. That whenever twenty legal voters of any such towns, villages, or city shall present to the clerk thereof a written application, requesting that an election shall be held to determine whether such town, village, or city shall subscribe to the capital stock of said company, or make a donation thereto, or loan money or bonds or its credit, to aid in the construction of said road, or any branch or division thereof, stating the amount and whether subscribed, donated, or loaned, and the rate of interest, and the time of payment, such clerk shall receive and file such application, and immediately proceed to post written notices of an election to be held by the legal voters of such town, village, or city, which notices shall be posted in ten of the most public places in such town, village, or city, for thirty days preceding such election, and shall state fully the object of such election; and such election shall be held and conducted and return thereof made as is provided by law, and, in any village or city, as is provided by the law under which the same is incorporated, and an additional return shall be made to one of the directors of said company. Each elector at such election shall deposit a ballot for said subscription, donation, or loan; and if a majority of the legal voters of such town, village, or city, voting at such election, shall vote for such subscription, donation, or loan, then such town, village, or city shall, by its proper corporate authorities, subscribe to the stock of said company, or donate or loan thereto, as shall be determined at said election, and shall issue to the said railroad company its bonds, in such denominations as said company may designate, not less than one hundred dollars, and bearing interest as may be determined at such election, not to exceed ten per cent. per annum, payable annually at such place as such company may designate, which bonds shall be signed by the supervisor and countersigned by the clerk in towns organized under the township organization law, and

Digitized by Google

in incorporated villages or cities, signed by the president of the board of trustees and countersigned by the clerk or by the officers having similar powers and duties in any such village or city, and any such town, village, or city so subscribing, donating, or loaning, as aforesaid, shall by its proper corporate authority, annually thereafter, assess and levy a tax upon the taxable property of said town, village, or city, sufficient to pay and liquidate the annually accruing interest on such bonds, and so much of the principal thereof as, from time to time, shall become due, which taxes shall be levied and collected in the same manner as other corporation taxes in such town, village, or city: *Provided*, That for the payment of the principal thereof such tax shall not exceed two per cent. per annum."

The town of Oregon was and is an incorporated town or township situated on both sides, east and west, of Rock River, and embracing within its limits a village called Oregon, on the west bank of the river, which village was and is what is called "the town of Oregon" in the second section of the above Act. The town was such a town as is described in the fifth section of the Act.

On the 24th of May, 1870, more than twenty legal voters of the town presented to the clerk of the town the following written application, signed by them, in conformity with section six of the Act:

"*To the Town Clerk of the Town of Oregon, in the County of Ogle, and State of Illinois:*

The undersigned, legal voters of the said town of Oregon, in the county and State aforesaid, do hereby make application to you, and request that an election shall be held in said town, under the provisions of an Act of the General Assembly of the State of Illinois, entitled 'An Act to amend an Act entitled An Act to incorporate the Ogle and Carroll County Railroad Company,' approved March 30th, A.D. 1869, to determine whether said town shall, in its corporate capacity, make a donation to the said Ogle and Carroll County Railroad Company of the sum of forty thousand dollars in the bonds of said town, in such denominations as said company may designate,

Digitized by Google

not less than one hundred dollars each, payable, at the option of said town, within twenty years from the date of their issue, bearing interest from date at the rate of seven per cent. per annum, payable annually, and principal and interest payable at such place as said company may designate, to aid in the construction of the first division of said Ogle and Carroll County Railroad; said bonds not to be issued, dated or delivered until said company shall have completed said first division of said railroad, with a T rail weighing not less than forty five pounds to the yard, in condition to run trains thereon from a connection or intersection with the Chicago and Northwestern Railway to a point at and within said town of Oregon, within one half-mile of the east bank of Rock River, and shall have equipped the same with rolling-stock sufficient to operate a daily train to and from said town for the accommodation of passengers and freight, nor until said company shall have released said town from all liabilities on account of donations heretofore voted, except a donation of ten thousand dollars voted by said town on the ninth day of December, A.D. 1869, said vote and donation of forty thousand dollars to be null and void unless said first division of said railroad shall be completed and equipped as aforesaid on or before the first day of January, A.D. 1871; but in case the same shall be so completed and equipped within the time aforesaid, and said company shall execute and deliver said release, then the said bonds to be deliverable upon the demand of said company, and to bear date of the day of delivery.

And we request that immediate notice be given of such election, and that the same be held on the 23d day of June, A.D. 1870.

Dated this 24th day of May, A.D. 1870."

The clerk received and filed the application, and gave the notice required by section six of the Act, of an election to be held June 23d, 1870, the notice being as follows:

"*Election Notice.*

Whereas more than twenty legal voters of the town of Oregon, in the county of Ogle, and State of Illinois, have

Digitized by Google

presented to me, clerk of said town, a written application requesting that an election be held in said town under the provisions of an act of the General Assembly of the State of Illinois, entitled 'An Act to amend an Act entitled An Act to incorporate the Ogle and Carroll Railroad Company,' approved March 30th, 1869, to determine whether said town shall, in its corporate capacity, make a donation to the said Ogle and Carroll County Railroad Company, of the sum of forty thousand dollars in the bonds of said town, in such denominations as said company may designate, not less than one hundred dollars each, payable at the option of said town, within twenty years from the date of issue, bearing interest from date at the rate of seven per cent. per annum, payable annually, and principal and interest payable at such place as said company may designate, to aid in the construction of the first division of said Ogle and Carroll County Railroad, said bonds not to be issued, dated or delivered until said company shall have completed said first division of said railroad, with a T rail weighing not less than forty five pounds to the yard, in condition to run trains thereon from a connection or intersection with the Chicago and Northwestern Railway, to a point at and within said town of Oregon, within one half mile of the east bank of Rock River, and shall have equipped the same with rolling stock sufficient to operate a daily train to and from said town for the accommodation of passengers and freight, nor until said company shall have released said town from all liability on account of donations heretofore voted, except a donation of ten thousand dollars voted by said town on the ninth day of December, A.D. 1869, said vote of forty thousand dollars to be null and void unless said first division of said railroad shall be completed and equipped as aforesaid, on or before the first day of January, A.D. 1871, but in case the same shall be so completed and equipped within the time aforesaid, and said company shall execute and deliver said release, then the said bonds to be deliverable upon demand of said company, and to bear date of the day of delivery.

The inhabitants, legal voters of the said town of Oregon, are therefore hereby notified that an election will be held by

Digitized by Google

the legal voters of said town, at the court house in said town of Oregon, on Thursday, the 23d day of June, A.D. 1870, at 9 o'clock in the forenoon of said day, for the object and purpose of voting upon and determining the matters and questions hereinbefore and in said written application set forth and contained.

Given under my hand, at my office in said town of Oregon, this 24th day of May, A.D. 1870.

F. H. MARSH, *Town Clerk of said Town.*"

The election was held on the day, in the manner and with the result stated in the following record on file in the office of the town clerk:

"Pursuant to notice given according to law, the voters of the town of Oregon, county of Ogle, and State of Illinois, assembled at the court house in Oregon, at 9 o'clock A.M., on Thursday, the 23d day of June, A.D. 1870. The meeting was called to order by the town clerk, and, on motion of W. J. Mix, E. J. Reiman was chosen moderator of said meeting, and was duly sworn by the town clerk. Proclamation was then made of the opening of the polls, which were kept open until 12 o'clock M., when, on motion of O. Wilson, they were closed for one hour, until one o'clock, for dinner, by proclamation of the town clerk. At one o'clock the polls were again proclaimed open, and were kept open until six o'clock P.M., proclamation being made half hour before the closing of the polls. At the hour of six P.M. the moderator proceeded to count out the ballots, until they were all counted, which number equalled the numbers on the poll-list. The ballots were then read by the moderator, and resulted as follows: there being for donation, as stated in the notice, one hundred and sixty three votes; against donation, as stated in the notice, twelve votes. The result being publicly read, the meeting was then closed.

E. J. REIMAN, *Moderator.*

Attest: F. H. MARSH, *Town Clerk.*"

Digitized by Google

A defence set up to the validity of the bonds, in the amended second plea, is, that their execution was obtained by fraud and circumvention. This is founded on the following facts: The first division of the road was not completed or equipped in accordance with the application, and the notice of election, and the vote, on or before the 1st of January, 1871, but was completed by the 1st of April, 1871. On the 30th of December, 1870, Mortimer W. Smith, supervisor of the town, gave to the town clerk of the town his written resignation of the office of supervisor, and it was placed among the records of the town clerk's office. He never afterwards acted as supervisor. The town had by law one supervisor and two justices of the peace and one town clerk. They were all of them, by statute, town officers. William Schultz was elected one of the justices of the town April 5th, 1870, and duly qualified as such April 9th, 1870. He continued to reside in the town until after April 3d, 1871, and during the year 1871, but was absent from the town, and in the city of New York, from December 26th, 1870, till about January 6th, 1871. He resigned his office on March 2d, 1871, by filing his resignation in the office of the clerk of the county, who entered it of record according to law. After that he did not act as a justice. A successor to Schultz as a justice was elected by the people at the annual town meeting held April 4th, 1871, and not before, and such successor qualified April 8th, 1871, and was commissioned April 15th, 1871. James H. Cartwright was the other justice of the peace. Frederick H. Marsh was the town clerk.

The following statutory provisions were in force in Illinois in 1870 and 1871: "§ 16. Resignations of the office of justice of the peace and constable shall be made to the clerk of the court of the proper county, who shall immediately enter the date of every such resignation in the book above provided for;" (that is, a book to be kept by the clerk of the county, in which he was required to enter the name of every justice of the peace and constable sworn into office, together with the date of his commission or certificate, and the time of his being sworn into office;) "which book, or a certified copy of an

Digitized by Google

entry in the same, shall be received in evidence in all Courts within this State." Gross' Stat., 1869, vol. 1, 3d ed., c. 59, p. 394. "1. Whenever any town shall fail to elect the proper number of town officers, to which such town may be entitled by law, or when any person elected to any town office shall fail to qualify as such, or whenever any vacancy shall happen in any town office from death, resignation, removal from the town, or other cause, it shall be lawful for the justices of the peace of the town, together with the supervisor and town clerk, to fill the vacancy or vacancies occasioned or occurring in consequence of either or any of the causes above specified, by appointment by warrant under their hands and seals; and the persons so appointed shall hold their respective offices during the unexpired term of the persons in whose stead they have been appointed, and until others are chosen or appointed in their places, and shall have the same powers and be subject to the same duties and penalties as if they had been duly chosen by the electors. 2. Whenever a vacancy shall occur, from any cause, in any or either of the offices enumerated in the foregoing section, as composing the board of appointment for the appointment of town officers, in case of vacancy, it shall be lawful for the remaining officers of such appointing board to fill any vacancy or vacancies thus occurring, except in cases of vacancy in the office of justice of the peace, which shall be filled only by election. 3. When any appointment shall be made, as provided in the two preceding sections, the officers making the same shall cause the warrant of appointment to be forthwith filed in the office of the town clerk, who shall forthwith give notice to each person appointed." Gross' Stat., 1869, vol. 1, 3d ed., c. 103 d, art. 7, pp. 750, 751.

On the 3d of April, 1871, Cartwright, (the remaining justice,) and Marsh, (the town clerk,) met at the office of the town clerk, and, by a paper then signed by each of them, appointed Elias S. Potter to fill the vacancy in the office of supervisor, caused by the resignation of Smith, and ordered the clerk to give the certificate of appointment to Potter. The paper bore date the 31st of December, 1870, and was filed in the office of the town clerk on the 3d of April, 1871. On the same 3d of April,

Digitized by Google

a proper official bond, executed on that day by Potter and two sureties, but bearing date the 31st of December, 1870, was filed in the office of the town clerk, with an oath of office signed and sworn to by Potter before Cartwright on the same 3d of April, but purporting to have been subscribed and sworn to on the 31st of December, 1870. On the same 3d of April, Potter, as supervisor, and Marsh, as town clerk, signed the bonds and the coupons, and delivered them to the president of the railroad company. One Dwight was elected supervisor of the town at the regular annual town meeting, held on April 4th, 1871, and assumed the office April 10th, 1871, and held it for the ensuing year. It was known to all parties that this town meeting was to be held, and it is alleged that the officers of the railroad company conspired with Cartwright and Marsh to procure the appointment of Potter as supervisor, so that the bonds might be issued before the election by the people of a new supervisor on April 4th, 1871.

The statute of Illinois, as to fraud and circumvention, set up and relied on, is as follows: "11. If any fraud or circumvention be used, in obtaining the making or executing of any of the instruments aforesaid," (that is, any note, bond, bill, or other instrument in writing, for the payment of money or property, or the performance of covenants or conditions,) "such fraud or circumvention may be pleaded in bar to any action to be brought on any such instrument so obtained, whether such action be brought by the party committing such fraud or circumvention, or any assignee or assignees of such instrument." Gross' Stat., 1869, vol. 1, 3d ed., c. 73, p. 462.

Mr. James K. Edsall for plaintiff in error.

I. Under Rev. Stat. Ill. § 11, c. 73, the defence that the making or execution of an instrument was obtained by fraud is good against a *bona fide* holder for value, to whom it was transferred before maturity without notice of the alleged fraud. It is otherwise where the fraud relates solely to the consideration. *Hubbard* v. *Rankin*, 71 Ill. 129; *Taylor* v. *Atchison*, 54 Ill. 196; *Vanbrunt* v. *Singley*, 85 Ill. 281; *Richardson* v. *Schirtz*,

Digitized by Google

59 Ill. 313; *Easter* v. *Minard*, 26 Ill. 495; *Depuy* v. *Schuyler*, 45 Ill. 306. Aside from the question of fraud Potter's appointment as supervisor was invalid, because Schultz was still in office when it was made and it appears affirmatively that he was not present when the appointment was made, and took no part in it. *Crocker* v. *Crane*, 21 Wend. 211, 218; *S. C.* 34 Am. Dec. 228; *Babcock* v. *Lamb*, 1 Cowen, 238; *Ex parte Rogers*, 7 Cowen, 526, and note; *Louk* v. *Woods*, 15 Ill. 256, 262; *Williams* v. *Lunenburg School District*, 21 Pick. 75; *S. C.* 32 Am. Dec. 243; *McCoy* v. *Curtice*, 9 Wend. 17; *S. C.* 24 Am. Dec. 113. See *Anthony* v. *Jasper*, 101 U. S. 693.

II. These bonds were issued in violation of § 12, Art. XI., of the Constitution of Illinois of 1870, which prohibits municipal corporations from creating indebtedness to exceed five per cent. on the assessed value of the taxable property therein. When they were issued, the town was already indebted beyond that amount. There was no prior vote of the people, within the saving clause, and the adoption of the constitution deprived the town of the power to issue them. *Buchanan* v. *Litchfield*, 102 U. S. 278; *School District* v. *Stone*, 106 U. S. 183; *Litchfield* v. *Ballou*, 114 U. S. 190; *Prince* v. *Quincy*, 105 Ill. 138. The question whether power exists in a municipality to issue bonds may depend on extrinsic facts, not appearing on the face of the law. The purchaser is bound to know whether the power exists; *Northern Bank* v. *Porter Township*, 110 U. S. 608; *Dixon County* v. *Field*, 111 U. S. 83; *Merchants' Bank* v. *Bergen County*, 115 U. S. 384; *Daviess County* v. *Dickinson*, 117 U. S. 657: but is protected against mere irregularity in the execution of the power. See also *Anthony* v. *Jasper County*, cited above; *People* v. *Dutcher*, 56 Ill. 144; *People* v. *Glann*, 70 Ill. 232; *People* v. *Holden*, 91 Ill. 446. For the construction of this clause of the State Constitution by the Supreme Court of the State, see *Middleport* v. *Ætna Life Ins. Co.*, 82 Ill. 562; *People* v. *Jackson County*, 92 Ill. 441; *Prairie* v. *Lloyd*, 97 Ill. 179; *Wade* v. *La Moille*, 112 Ill. 79.

III. The alleged vote of the people was not taken at an election as required by the statute. *Chicago & Iowa Railroad* v. *Mallory*, 101 Ill. 583; *Lippincott* v. *Pana*, 92 Ill. 24.

Digitized by Google

IV. The town is not estopped by the recitals in the bonds from making the defences now interposed. Assuming for the present purpose that the recital is sufficient to show that the bonds were issued in accordance with the provisions of the act therein mentioned, this would fall far short of showing that the same were issued in compliance with a vote of the people of the town at an election held in pursuance of that act prior to the adoption of the constitution in 1870. The act required an election to be held before the bonds were issued, but did not require the same to be held before the adoption of the constitution in 1870. This requirement was imposed by the constitution itself. The recital does not purport to show compliance with the vote of the people nor with the constitutional requirement in any respect, and cannot be so enlarged by construction as to embrace the same. *Buchanan* v. *Litchfield, School District* v. *Stone, Northern Bank* v. *Porter Township, Dixon County* v. *Field*, all cited above; *Bates* v. *Ind. School District of Lyon County*, 25 Fed. Rep. 192; *Liebman* v. *San Francisco*, 24 Fed. Rep. 705.

V. The town is not estopped by the certificates connected with the registration of the bonds from showing the truth in its defence. *Dixon County* v. *Field* and *Daviess County* v. *Dickinson*, cited above. It cannot be held that it is estopped by the secret and fraudulent act of one who, at the time, had no color of title to the office of supervisor. *Anthony* v. *Jasper County* and *Merchants' Bank* v. *Bergen County*, both cited above.

VI. No estoppel arises from the recitals contained in the caption to the registration of the bonds in the supervisor's book. Rev. Stat. Ill., c. 113, par. 12.

VII. The town is not estopped by the recovery in the former suit, brought by Wallace upon other coupons, from making the defence set up in the special pleas in this suit. The Wallace suit was brought on other coupons than those involved in this suit. The defences interposed by the special pleas were not set up and actually litigated in the Wallace suit. Such being the case, the verdict and judgment in that suit do not estop the town from making either of the de-

Digitized by Google

fences set up in the special pleas in this suit. *Cromwell* v. *County of Sac*, 94 U. S. 351; *Davis* v. *Brown*, 94 U. S. 423; *Russell* v. *Place*, 94 U. S. 606; *Nat. Bank* v. *School District of Riverside*, 25 Fed. Rep. 629; *Nesbit* v. *Ind. School Dist.*, 25 Fed. Rep. 635. The statutory defence set up in the second plea could not have been proven as against a *bona fide* holder for value under the general issue, which was the only plea filed in the Wallace suit. *Anderson* v. *Jacobson*, 66 Ill. 522; *Cole* v. *Joliet Opera House Co.*, 79 Ill. 96; *Sims* v. *Klein*, Breese, 292, 302. While it was competent at common law, and independently of the statute, to prove fraud in the inception of the paper under that plea, it was sufficient answer to such proof, introduced under the general issue at common law, to show that the plaintiff was a *bona fide* holder for value. *Smith* v. *Sac County*, 11 Wall. 139. Under the pleadings in that case, it was unnecessary that the jury should pass upon the question of fraud in order to find a verdict for the plaintiff, who appeared to be a *bona fide* holder. Under the Illinois statute, when the defence that the making and executing of the paper was obtained by fraud, etc., is specially pleaded, the defence is good against a *bona fide* holder. *Hubbard* v. *Rankin*, and other cases cited *ante*. It is not competent to show by extrinsic evidence that matters were adjudicated in such former suit, *not* embraced within the issues as formed on the record. *Packet Co.* v. *Sickles*, 5 Wall. 580; *Putnam* v. *New Albany*, 4 Bissell, 365, 383; *Providence* v. *Adams*, 11 R. I. 190; *Russell* v. *Place*, 94 U. S. 606.

As to the Third Plea: The evidence shows that the defence set up in this plea, arising under § 12, Art. IX. of the Constitution, was not in any manner litigated in the Wallace suit. No evidence was introduced in that case tending to show either the amount of the existing indebtedness of the town or the assessed value of the taxable property therein. The defence appears to have rested on other grounds. *Davis* v. *Brown*, 94 U. S. 423, 428; *Barger* v. *Hobbs*, 67 Ill. 598; *Sturtevant* v. *Randall*, 53 Maine, 149; *Cromwell* v. *County of Sac*, *Russell* v. *Place*, above cited.

Digitized by Google

Mr. Samuel W. Packard for defendant in error.

Mr. Justice Blatchford, after stating the facts as above reported, delivered the opinion of the court.

The court refused to submit to the jury, and we think properly, any question as to whether the making or execution of the bonds and coupons was obtained by fraud or circumvention.

Even if the statute applies to town bonds and their coupons, no fraud or imposition was practised on Potter or Marsh to induce them to sign these bonds and coupons. They knew what they were signing and signed intentionally. The fraud or circumvention intended by the statute, which only embodies a rule of the common law, is not that which goes merely to the consideration of the instrument, but it must go to the execution or making; and there must be a trick or device by which one kind of instrument is signed in the belief that it is of another kind, or the amount or nature or terms of the instrument must be misrepresented to the signer. No different ruling as to the statute has ever been made by the Supreme Court of Illinois, especially in a case where, as here, the holder of the instrument is a *bona fide* holder of it, before maturity, for a valuable consideration, without notice. In *Latham* v. *Smith*, 45 Ill. 25, decided in 1867, in construing this statute, the court said: "A fraud in obtaining a note may consist of any artifice practised upon a person to induce him to execute it, when he did not intend to do such an act. Circumvention seems to be nearly, if not quite, synonymous with fraud. It is any fraud whereby a person is induced by deceit to make a deed or other instrument. It must be borne in mind that the fraud or covin must relate to the obtaining of the instrument itself, and not to the consideration upon which it is based. It is not fraud which relates to the quality, quantity, value, or character of the consideration that moves the contract, but it is such a trick or device as induces the giving of one character of instrument under the belief that it is another of a different character; such as giving a note or

Digitized by Google

other agreement for one sum or thing when it is for another sum or thing; or as giving a note under the belief that it is a receipt." This ruling was followed in *Shipley* v. *Carroll*, 45 Ill. 285; *Elliott* v. *Levings*, 54 Ill. 213; and *Maxcy* v. *Williamson County*, 72 Ill. 207.

It is also contended that the appointment of Potter as supervisor was invalid, because Schultz, though he had resigned as justice, legally continued in office till his successor was elected, and yet took no part in the appointment. But it is plain, we think, that, within the language and meaning of the statute, as respects the four members of the appointing board designated by statute, two of them were out of office so far as their acting as such members was concerned. The supervisor and Schultz had resigned, and their offices were vacant, and it was lawful for the remaining two officers to fill the vacancy in the office of supervisor. No authority to which we are referred holds to the contrary. Where a town is trying to escape the enforcement of its liability to creditors through the resignation of an officer on whom process is to be served, and the failure to supply his place, the resigning officer is rightly held, *quoad* creditors, to continue in office, subject to the service of process, till his successor qualifies. In the present case there was not only a "vacancy" in the office of supervisor, for the purpose of filling it, under § 1, but there was a vacancy in the office which Schultz had held, for the purpose of the action of Cartwright and Marsh alone, as the remaining officers of the appointing board, to appoint a supervisor, under § 2. On any other construction, as, by § 2, a vacancy in the office of justice can be filled only by election, a town would, in case of a vacancy in the office of justice, have to go without a supervisor, in case of a vacancy in his office, till a justice could be elected.

Another defence is set up, under the amended third plea, founded on § 12 of Article 9 of the Constitution of Illinois, which went into effect August 8th, 1870, and provides as follows: "§ 12. No county, city, township, school district, or other municipal corporation shall be allowed to become indebted in any manner or for any purpose, to an amount,

Digitized by Google

including existing indebtedness, in the aggregate exceeding five per centum on the value of the taxable property therein, to be ascertained by the last assessment for the State and county taxes previous to the incurring of such indebtedness. Any county, city, school district, or other municipal corporation, incurring any indebtedness as aforesaid, shall, before or at the time of doing so, provide for the collection of a direct annual tax sufficient to pay the interest on such debt as it falls due, and also to pay and discharge the principal thereof within twenty years from the time of contracting the same. This section shall not be construed to prevent any county, city, township, school district, or other municipal corporation from issuing their bonds in compliance with any vote of the people which may have been had prior to the adoption of this Constitution, in pursuance of any law providing therefor."

It appearing that, when the bonds in question in this suit were issued, the debt of the town was already greater than five per centum on the value of its taxable property, as ascertained by the assessment for 1870, it is contended that the bonds could not be lawfully issued, except in compliance with the vote of June 23d, 1870, and in conformity with the conditions imposed by that vote, one of which was the completion and equipment of the first division of the road on or before January 1st, 1871, and that that condition was not observed. The question is sought to be made one of power or authority to issue the bonds, within the rules laid down by this court as applicable even in the case of bonds in the hands of a *bona fide* holder.

At the time the bonds in question were issued, a statute enacted April 16th, 1869, was in force in Illinois, § 7 of which, Gross' Stat., 1869, vol. 1, 3d ed., p. 556, provided that any town should have the right, "upon making any subscription or donation to any railroad company, to prescribe the conditions upon which such bonds, subscriptions, or donations shall be made, and such bonds, subscriptions, or donations shall not be valid and binding until such conditions precedent shall have been complied with."

The language of this statute was as imperative as is that of

Digitized by Google

the Constitution of 1870 in regard to complying with the conditions contained in any vote of the people; and § 6 of the Act of March 30th, 1869, before cited, prescribes that the proper corporate authorities of the town shall make the donation or subscription, "as shall be determined at said election."

In respect to this compliance with the conditions imposed by the vote of the people, whether the question is to be regarded as arising under the provision of the Constitution or that of a statute, it must equally be regarded as concluded by the recital in the bonds, made by the supervisor and the town clerk. Section 6 of the Act of March 30th, 1869, provides that if a majority of the legal voters of the town, voting at the election, vote for the donation, the town shall, by its "corporate authorities," make the donation to the company, "as shall be determined at said election," and shall issue its bonds to the company, "which bonds shall be signed by the supervisor and countersigned by the clerk in towns organized under the township law." Within the numerous decisions by this court on the subject, the supervisor and the town clerk, they being named in the statute as the officers to sign the bonds, and the "corporate authorities" to act for the town in issuing them to the company, were the persons entrusted with the duty of deciding, before issuing the bonds, whether the conditions determined at the election existed. If they have certified to that effect in the bonds, the town is estopped from asserting, as against a *bona fide* holder, that the conditions prescribed by the popular vote were not complied with. They state, in each bond, that the faith, credit, and property of the town are, by the bond, solemnly pledged for the payment of the principal and interest named in it "under authority of" the Act of March 30th, 1869, reciting its title, and that the 60 bonds, amounting to $50,000, "are the only bonds issued by said town of Oregon under and by virtue of said Act." The provision in § 6 of the Act, that the town shall, by its proper corporate authority, annually assess and levy a tax to pay the interest and principal of the bonds, is a warrant for the pledge made, in the bonds, of the faith, credit, and property of the town. The recitals are within the ad-

Digitized by Google

judged cases in this court, as to the effect of recitals in bonds, that they are issued "under authority of" a specified statute, and "under and by virtue of" that statute, and they estop the town from taking the defence that the first division of the road was not completed by the time specified, as against the plaintiff, as a *bona fide* holder of the bonds.

In *Pana* v. *Bowler*, 107 U. S. 529, 539, this court upheld the effectiveness of a recital in bonds, in favor of a *bona fide* holder, as against an alleged defect in the mode of conducting an election, held prior to the adoption of this same Constitution of Illinois, the bonds being issued after its adoption, although that instrument forbade the issuing of the bonds, unless their issue should have been authorized under then existing laws, by a vote of the people prior to the adoption of the Constitution.

The present case is directly within the decision of this court in *Ins. Co.* v. *Bruce*, 105 U. S. 328, where it was held that recitals in bonds estopped a town in Illinois, as against a *bona fide* holder, from showing that conditions imposed on its liability by the vote of the people had not been complied with, although the statute declared that the bonds should not be valid and binding until such conditions precedent had been complied with. There are numerous other cases in this court to the same effect.

The provision of § 12 of Article 9 of the Constitution of Illinois did not introduce any new rule of evidence in regard to the mode of proving, in favor of a *bona fide* holder, the compliance with the vote of the people, but left the compliance to be conclusively established in such a case by the recital in the bonds, made by the designated official authorities.

We are not referred to any decision of the Supreme Court of Illinois, made prior to the issuing of the bonds in question, which holds to the contrary of the views we have announced. The case of *The People* v. *Dutcher*, 56 Ill. 144, decided at September Term, 1870, was a mandamus applied for by a railroad company to compel a supervisor to subscribe for stock, where conditions imposed by the vote of the town had not been complied with, and its bonds had not been issued. The

Digitized by Google

mandamus was refused. This direct proceeding is, as this court has uniformly held, a very different thing from a suit on the bonds, by a *bona fide* holder, the cases not being analogous or governed by the same rules.

A defence is also set up, under the amended fourth plea, founded on the second additional section or article to the Constitution of Illinois, of 1870, which took effect July 2, 1870, and is in these words: "No county, city, town, township, or other municipality shall ever become subscriber to the capital stock of any railroad or private corporation, or make donation to or loan its credit in aid of such corporation: *Provided, however*, That the adoption of this article shall not be construed as affecting the right of any such municipality to make such subscriptions where the same have been authorized, under existing laws, by a vote of the people of such municipalities prior to such adoption."

The bonds in question having been issued after July 2, 1870, and the requirement, to make them valid, being that they must have been authorized, under laws in force before July 2, 1870, by a vote of the people of the town given before that date, it is contended that they were not so authorized, because the vote of June 23, 1870, was taken at a town meeting held and presided over by a moderator, and not by judges of election. The argument made is, that § 6 of the Act of March 30th, 1869, provided that the election should "be held and conducted and return thereof made as is provided by law, and, in any village or city, as is provided by the law under which the same is incorporated;" and that a town meeting, presided over by a moderator, and not held by the supervisor, assessor, and collector, as judges of election, was not an "election," within the meaning of the statute, and so was not an election "under existing laws," within the meaning of the Constitution.

The election was in fact conducted in the manner required for the election of town officers, and not in the manner required for general elections. We are of opinion that, under the Act of 1869, the election in a town could properly be conducted in the manner prescribed by law for the election in towns of town officers, namely, by a moderator and the town

Digitized by Google

clerk, the town clerk having given, as required by the Act, the prior notice of the election, and the return of the election being filed in the office of the town clerk, and the two officers being paid by the town. The voting for town officers at annual town meetings in the manner prescribed therefor by the statutes of Illinois, is called in those statutes an "election," and this special voting in the same manner for this town object was an "election," within the meaning of the Act of 1869. The requirement of the Act is, that the "election shall be held and conducted and return thereof made as is provided by law," and not "as is provided by law for general elections." If a town, it is the law provided for town elections. If a village or city, and the law of its incorporation has special provisions, those are to be followed; otherwise, any general law as to village or city elections is to be observed. As the proceeding was to originate by an application filed in the town clerk's office, so the same officers who would conduct an ordinary town election were to be concerned with this election, and the town clerk's office was to be the place of deposit of all the papers and of the return of the vote, and two town officers were to issue the bonds. None of the proceedings were to be connected with the county clerk's office, as in the case of a general election. This was the ruling of the Supreme Court of Illinois, in a case decided after June 23, 1870, though before these bonds were issued, *The People* v. *Dutcher*, 56 Ill. 144; and it was followed in other cases, in that court, after the bonds were issued, though somewhat modified more recently. We think it was the correct ruling.

The questions above considered cover substantially all the assignments of error. The direction to find a verdict for the plaintiff was proper.

Judgment affirmed.

Digitized by Google

PALMER *v.* HUSSEY.

ERROR TO THE SUPREME COURT OF THE STATE OF NEW YORK.

Submitted November 1, 1886. — Decided November 15, 1886.

The decision of the highest court of a State upon a motion, accompanied by affidavits as proof, to perpetually enjoin the collection of a judgment obtained in a court of the State on the ground of the discharge of the defendant in bankruptcy, raises a Federal question which may be reviewed by this court.

Hennequin v. *Clews*, 111 U. S. 676, affirmed and followed, in holding, on similar facts in this case, that there was no such fraud in the creation of the debt, and no such trust in respect to the possession of the bonds, as to bar the operation of the discharge in bankruptcy.

This was a motion to dismiss, united with a motion to affirm. The facts which make the case are stated in the opinion of the court.

Mr. S. W. Bower for the motions.

Mr. A. M. Skeir opposing.

Mr. Chief Justice Waite delivered the opinion of the court.

This record shows that on the 18th of April, 1874, Acalus L. Palmer recovered a judgment in the Supreme Court of New York against Erwin A. Hussey for $32,128.57 on account of certain bonds of the United States which had been placed in his hands by Palmer, and for which he bound himself by a writing, the material part of which is as follows:

"These bonds we hold subject to the order of A. L. Palmer, at ten days' notice, agreeing to collect the coupons for his account free of charge, and to allow him two per cent. per annum interest on the par value of said bonds, said interest to commence and count June 1st, 1866; interest on the 7-30 bonds payable June and December 15th; on 5-20, May and November 1st. "E. A. Hussey & Co."

Digitized by Google

In the complaint it was alleged that the bonds "were received by the defendant from the plaintiff as his agent and broker, in a fiduciary capacity, upon the arrangement and agreement as contained" in the foregoing paper; "that the said defendant without the authority or permission of the plaintiff, has fraudulently and wilfully sold, disposed of, and misapplied the said bonds, and has refused to deliver up the same to the said plaintiff, who has frequently demanded the same from him, and given the notice so to do as required by the agreement." This was denied in the answer. The suit was begun September 7, 1868.

On the 20th of January, 1868, Hussey filed his petition in bankruptcy, and was duly adjudicated a bankrupt January 24th. On the 17th of May, 1880, he received his final discharge. The record does not show when his application for a discharge was made to the bankrupt court. On the 12th of June, 1880, he moved the Supreme Court to perpetually enjoin the collection of the judgment in favor of Palmer because of his discharge. In his affidavit in support of this motion, and which presents the grounds of the relief asked, it is stated:

"That, among other grounds of objection to my discharge in bankruptcy made by the plaintiff, it was charged that I have been guilty of improper and undue delay in said proceedings. That that question was presented to the court and fully explained, and the court decided that I was not guilty of laches, and was entitled to my discharge."

In opposition to the motion the counsel of Palmer filed a counter-affidavit setting forth the grounds of defence, and, among others, that the judgment was an adjudication that "the bonds were received in a fiduciary capacity," and were "fraudulently and wilfully sold, disposed of, and misapplied by Hussey."

The Supreme Court, both at special and general term, denied the motion on the ground that the judgment on its face showed that the debt was created by fraud, and while Hussey was acting in such a fiduciary capacity as to prevent the discharge in bankruptcy from operating as a release. This

Digitized by Google

order was reversed by the Court of Appeals and the execution of the judgment perpetually enjoined, because the fraud and trust established by the findings were not of a character to bar the effect of the discharge. To reverse that judgment this writ of error was brought, which Hussey now moves to dismiss because no Federal question was raised or decided, and with this motion he has united a motion to affirm under rule 6, § 5.

The motion to dismiss is denied. Palmer, in his affidavit, which in this case takes the place of technical pleading, specially set up and claimed an immunity under § 5117 of the Revised Statutes from the operation of the discharge in bankruptcy, because of the fraudulent and fiduciary character of his debt, and the decision was against him. This gives us jurisdiction, since the exemption depends on the construction and effect of § 5117, which provides that "no debt created by the fraud . . . of the bankrupt, or . . . while acting in any fiduciary character, shall be discharged by proceedings in bankruptcy." As the affidavit of Hussey set forth the date of the adjudication in bankruptcy and the date of discharge, the question of delay in making an application, and the construction and effect of § 5108, may also, perhaps, have been raised on the record. The opinion of the Court of Appeals shows that both of these questions were actually presented to and decided by that court. 87 N. Y. 303.

Upon the facts set forth in the affidavit of Hussey, which are not denied in the counter-affidavit of the attorney of Palmer, and upon the facts as they appear in the record of the judgment to be enjoined, it is clear that, under the ruling of this court in *Hennequin* v. *Clews*, 111 U. S. 676, there was no such fraud in the creation of the debt, and no such trust in respect to the possession of the bonds by Hussey, as to bar the operation of the discharge.

By § 5119 of the Revised Statutes, the certificate of discharge is made conclusive evidence, in favor of the bankrupt, "of the fact and regularity of such discharge." We must presume, therefore, that the application was made within the time required by § 5108, or, if not, that any delay there may have

Digitized by Google

been was satisfactorily explained before the discharge was granted. The certificate is conclusive on this question.

As these are the only Federal questions presented, and one has been already settled by our decision in *Hennequin* v. *Clews*, and the other needs no further argument, the motion to affirm is granted.

Affirmed.

VICKSBURG & MERIDIAN RAILROAD v. O'BRIEN.

ERROR TO THE CIRCUIT COURT OF THE UNITED STATES FOR THE SOUTHERN DISTRICT OF MISSISSIPPI.

Argued April 19, 20, 1886. — Decided November 1, 1886.

In an action against a railroad company by a passenger to recover for injuries received by an accident to a train, a written statement as to the nature and extent of his injuries, made by his physician while treating him for them, for the purpose of giving information to others in regard to them, is not admissible in evidence against the company, even when attached to a deposition of the physician in which he swears that it was written by him, and that in his opinion it correctly states the condition of the patient at the time referred to.

The declaration of the engineer of the locomotive of a train which meets with an accident, as to the speed at which the train was running when the accident happened, made between ten and thirty minutes after the accident occurred, is not admissible in evidence against the company in an action by a passenger on the train to recover damages for injuries caused by the accident.

The case is stated in the opinion of the court.

Mr. Edgar M. Johnson, (with whom were *Mr. George Hoadly* and *Mr. Edward Colston* on the brief,) for plaintiff in error, cited: *Russell* v. *Hudson River Railroad*, 17 N. Y. 134; *Luby* v. *Hudson River Railroad*, 17 N. Y. 131; *Michigan Central Railroad* v. *Gougar*, 55 Ill. 503; *Morse* v. *Connecticut River Railroad*, 6 Gray, 450; *Lane* v. *Bryant*, 9 Gray, 245; *S. C.* 69 Am. Dec. 282; *Curl* v. *Chicago & Rock Island Railroad*, 11 Am. & Eng. Railroad Cas. 85; *Dietrich* v.

Digitized by Google

Baltimore &c. Railroad, 58 Maryland, 347; *Furst* v. *Second Avenue Railroad*, 72 N. Y. 542; *Bellefontaine Railroad* v. *Hunter*, 33 Ind. 335; *Sims* v. *Macon & Western Railroad*, 28 Georgia, 94; *Enos* v. *Tuttle*, 3 Conn. 247; *Fuller* v. *Naugatuck Railroad*, 21 Conn. 557; *Baltimore City Railway Co.* v. *Kemp*, 61 Maryland, 74.

Mr. William Nugent also filed a brief for plaintiff in error.

Mr. Thomas C. Catchings for defendants in error, cited as to the points decided by the court: *Commonwealth* v. *McPike*, 3 Cush. 181; *S. C.* 50 Am. Dec. 727; *Enos* v. *Tuttle*, 3 Conn. 247.

Mr. Justice Harlan delivered the opinion of the court.

This action was brought by Mary E. O'Brien and her husband, John J. O'Brien, to recover damages sustained in consequence of personal injuries received by the wife in September, 1881, while a passenger upon the Vicksburg and Meridian Railroad. The declaration alleges that the company "so carelessly, negligently, and unskilfully constructed and maintained its railroad track, engine, and cars, and so carelessly, negligently, and unskilfully conducted itself in the management, control, and running of the same," that the car in which Mrs. O'Brien was seated as a passenger was thrown from the railroad track and overturned, whereby she was seriously injured. There was a verdict and judgment for $9000 in favor of the plaintiffs.

1. At the trial the plaintiffs offered to read to the jury the deposition of a physician, and did read the first, second, and third interrogatories propounded to him, and the answers thereto. Responding to the first and second interrogatories, he stated, among other things, that his attendance upon Mrs. O'Brien commenced on the 16th of September, 1881; that he found her suffering extreme pain and in a very nervous condition, resulting a few hours before from a railroad accident on defendant's road; that such was the cause of her injuries

Digitized by Google

he knew from her own answers, from the statement of her brother-in-law, and from attending others who were on the train with her. The third interrogatory and answer were as follows:

"3. Look on the accompanying statement, dated November 26th, 1881, and state if it was written by you at the date it bears, for what purpose it was written, and to whom it was delivered. Does the statement represent substantially and correctly Mrs. O'Brien's condition as it appeared when you first saw her, and as it continued up to November 26th, 1881?

"Answer: I have looked upon the statement referred to, which was written by myself, at Mr. O'Brien's request, at the date mentioned, when he was about to take his wife away from here to his home in New Orleans, and was intended to convey an idea of how she was when I was called to see her, and what her condition was when she left my charge; and in my opinion I correctly stated her condition at the times referred to."

The written statement referred to in the interrogatory was signed by the witness, and attached to his deposition as an exhibit. It was addressed to Mr. O'Brien, and sets forth, with much detail, the nature of the injuries received by the wife, and their effect upon her bodily and mental condition. It also embodied an expression of the witness' opinion as to the probable length of time within which she might recover from her injuries. The plaintiff, before reading the remaining interrogatories and answers, offered to read this statement to the jury as evidence. The company objected, upon these grounds: That it was not made by the witness under oath, and in defendant's presence, or with its knowledge and consent; that it was hearsay evidence, and, therefore, wholly incompetent; and that, in any event, it could only be referred to by the witness to refresh his recollection. The court overruled the objection and permitted the statement to be read in evidence, the defendant taking an exception thereto, which was allowed. The remainder of the deposition was then read to the jury.

We are of opinion that this ruling cannot be sustained upon any principle recognized in the law of evidence. The authori-

Digitized by Google

ties are uniform in holding that a witness is at liberty to examine a memorandum prepared by him, under the circumstances in which this one was, for the purpose of refreshing or assisting his recollection as to the facts stated in it.

But there are adjudged cases which declare that, unless prepared in the discharge of some public duty, or of some duty arising out of the business relations of the witness with others, or in the regular course of his own business, or with the knowledge and concurrence of the party to be charged, and for the purpose of charging him, such a memorandum cannot, under any circumstances, be admitted as an instrument of evidence.[1] There are, however, other cases to the effect, that, where the witness states, under oath, that the memorandum was made by him presently after the transaction to which it relates, for the purpose of perpetuating his recollection of the facts, and that he knows it was correct when prepared, although after reading it he cannot recall the circumstances so as to state them alone from memory, the paper may be received as the best evidence of which the case admits.[2]

The present case does not require us to enter upon an examination of the numerous authorities upon this general subject; for, it does not appear here, but that at the time the witness testified he had, without even looking at his written statement, a clear, distinct recollection of every essential fact stated in it. If he had such present recollection, there was no necessity whatever for reading that paper to the jury. Applying, then, to the case the most liberal rule announced in any of the authorities, the ruling by which the plaintiffs were allowed to read the physician's written statement to the jury as evidence, in itself, of the facts therein recited, was erroneous.

---

[1] Note by the Court. *Lightner* v. *Wike*, 4 S. & R. 203; *Calvert* v. *Fitzgerald*, Litt. Sel. Cases, 388; *Lawrence* v. *Barker*, 5 Wend. 305; *Redden* v. *Spruance*, 4 Harrington (Del.), 265, 267-8; *Field* v. *Thompson*, 119 Mass. 151.

[2] Note by the Court. *Russell* v. *Hudson River Railroad*, 17 N. Y. 134, 140; *Guy* v. *Mead*, 22 N. Y. 465; *Merrill* v. *Ithaca & Oswego Railroad*, 16 Wend. 586; *S. C.* 30 Am. Dec. 130; *Kelsea* v. *Fletcher*, 48 N. H. 282; *Haven* v. *Wendell*, 11 N. H. 112; *Mims* v. *Sturdevant*, 36 Ala. 636, 640; *State* v. *Rawle*, 2 Nott & McCord, 331, 334.

Digitized by Google

It is, however, claimed, in behalf of the plaintiffs, that in his answers to other interrogatories the physician testified, apart from the certificate, to the material facts embodied in it, and that, therefore, the reading of it to the jury could not have prejudiced the rights of the defendant, and, for that reason, should not be a ground of reversal.

We are unable to say that the defendant was not injuriously affected by the reading of the physician's certificate in evidence. It is not easy to determine what weight was given to it by the jury. In estimating the damages to be awarded in view of the extent and character of the injuries received, the jury, for aught that the court can know, may have been largely controlled by its statements. The practice of admitting in evidence the unsworn statements of witnesses, prepared, in advance of trial, at the request of one party, and without the knowledge of the other party, should not be encouraged by further departures from the established rules of evidence.

While this court will not disturb a judgment for an error that did not operate to the substantial injury of the party against whom it was committed, it is well settled that a reversal will be directed unless it appears, beyond doubt, that the error complained of did not and could not have prejudiced the rights of the party. *Smiths* v. *Shoemaker*, 17 Wall. 630, 639; *Deery* v. *Cray*, 5 Wall. 795; *Moores* v. *Nat. Bank*, 104 U. S. 625, 630; *Gilman* v. *Higby*, 110 U. S. 47, 50.

2. At the trial below, plaintiffs introduced one Roach as a witness, who, during his examination, was asked whether he did not, shortly after the accident, have a conversation with the engineer having charge of defendant's train at the time of the accident, about the rate of speed at which the train was moving at the time. To that question the defendant objected, but its objection was overruled, and the witness permitted to answer. The witness had previously stated that, on examination of the track after the accident, he found a cross-tie or cross-ties under the broken rail in a decayed condition. His answer to the above question was: "Between ten and thirty minutes after the accident occurred, I had such a conversation

Digitized by Google

with Morgan Herbert, the engineer having charge of the locomotive attached to the train at the time of the accident, and he told me that the train was moving at the rate of eighteen miles an hour." The defendant renewed its objection to this testimony by a motion to exclude it from the jury. This motion was denied, and an exception taken. As bearing upon the point here raised it may be stated that, under the evidence, it became material — apart from the issue as to the condition of the track — to inquire, whether, at the time of the accident, (which occurred at a place on the line where the rails in the track were, according to some of the proof, materially defective,) the train was being run at a speed exceeding fifteen miles an hour. In this view, the declaration of the engineer may have had a decisive influence upon the result of the trial.

There can be no dispute as to the general rules governing the admissibility of the declarations of an agent to affect the principal. The acts of an agent, within the scope of the authority delegated to him, are deemed the acts of the principal. Whatever he does in the lawful exercise of that authority is imputable to the principal, and may be proven without calling the agent as a witness. So, in consequence of the relation between him and the principal, his statement or declaration is, under some circumstances, regarded as of the nature of original evidence, "being," says Phillips, "the ultimate fact to be proved, and not an admission of some other fact." 1 Phil. Ev. 381. "But it must be remembered," says Greenleaf, "that the admission of the agent cannot always be assimilated to the admission of the principal. The party's own admission, whenever made, may be given in evidence against him; but the admission or declaration of his agent binds him only when it is made during the continuance of the agency in regard to a transaction then depending, *et dum fervet opus*. It is because it is a verbal act and part of the *res gestæ* that it is admissible at all; and, therefore, it is not necessary to call the agent to prove it; but wherever what he did is admissible in evidence, there it is competent to prove what he said about the act *while he was doing it*." 1 Greenleaf, § 113. This court had occasion

Digitized by Google

in *Packet Co.* v. *Clough*, 20 Wall. 540, to consider this question. Referring to the rule as stated by Mr. Justice Story in his Treatise on Agency § 134, that "where the acts of the agent will bind the principal, there his representations, declarations, and admissions respecting the subject-matter will also bind him, *if made at the same time, and constituting part of the res gestæ*," the court, speaking by Mr. Justice Strong, said: "A close attention to this rule, which is of universal acceptance, will solve almost every difficulty. But an act done by an agent cannot be varied, qualified, or explained, either by his declarations, which amount to no more than a mere narrative of a past occurrence, or by an isolated conversation held, or an isolated act done, at a later period. The reason is that the agent to do the act is not authorized to narrate what he had done, or how he had done it, and his declaration is no part of the *res gestæ*."

We are of opinion that the declaration of the engineer Herbert to the witness Roach was not competent against the defendant for the purpose of proving the rate of speed at which the train was moving at the time of the accident. It is true that, in view of the engineer's experience and position, his statements under oath, as a witness, in respect to that matter, if credited, would have influence with the jury. Although the speed of the train was, in some degree, subject to his control, still his authority, in that respect, did not carry with it authority to make declarations or admissions at a subsequent time, as to the manner in which, on any particular trip, or at any designated point in his route, he had performed his duty. His declaration, after the accident had become a completed fact, and when he was not performing the duties of engineer, that the train, at the moment the plaintiff was injured, was being run at the rate of eighteen miles an hour, was not explanatory of anything in which he was then engaged. It did not accompany the act from which the injuries in question arose. It was, in its essence, the mere narration of a past occurrence, not a part of the *res gestæ* — simply an assertion or representation, in the course of conversation, as to a matter not then pending, and in respect to which his authority as

Digitized by Google

engineer had been fully exerted. It is not to be deemed part of the *res gestæ*, simply because of the brief period intervening between the accident and the making of the declaration. The fact remains that the occurrence had ended when the declaration in question was made, and the engineer was not in the act of doing anything that could possibly affect it. If his declaration had been made the next day after the accident, it would scarcely be claimed that it was admissible evidence against the company. And yet the circumstance that it was made between ten and thirty minutes — an appreciable period of time — after the accident, cannot, upon principle, make this case an exception to the general rule. If the contrary view should be maintained, it would follow that the declarations of the engineer, if favorable to the company, would have been admissible in its behalf as part of the *res gestæ*, without calling him as a witness — a proposition that will find no support in the law of evidence. The cases have gone far enough in the admission of the subsequent declarations of agents as evidence against their principals. These views are fully sustained by adjudications in the highest courts of the States.[1]

We deem it unnecessary to notice other exceptions taken to the action of the court below.

This case was decided at the last term of this court, and Mr. Justice Woods concurred in the order of reversal upon the grounds herein stated.

For the errors indicated the judgment is

Reversed, and the cause remanded for a new trial, and for further proceedings consistent with this opinion.

---

[1] Note by the Court. *Luby* v. *Hudson River Railroad*, 17 N. Y. 131; *Pennsylvania Railroad* v. *Brooks*, 57 Penn. St. 339, 343; *Dietrick* v. *Baltimore &c. Railroad*, 58 Maryland, 347, 355; *Lane* v. *Bryant*, 9 Gray, 245; *S. C.* 69 Am. Dec. 282; *Chicago, Burlington &c. Railroad* v. *Riddle*, 60 Ill. 534; *Virginia & Tennessee Railroad* v. *Sayers*, 26 Gratt. 328, 351; *Chicago & N. W. Railroad* v. *Fillmore*, 57 Ill. 265; *Michigan Central Railroad* v. *Coleman*, 28 Mich. 440, 446; *Mobile & Montgomery Railroad* v. *Ashcraft*, 48 Ala. 15, 30; *Bellefontaine Railway* v. *Hunter*, 33 Ind. 335, 354; *Adams* v. *Hannibal & S. J. Railroad*, 74 Missouri, 553, 556; *S. C.* Am. & Eng. Railroad Cas. 416 and note; *Kansas & Pacific Railroad* v. *Pointer*, 9 Kansas, 620, 630; *Roberts* v. *Burks*, Litt. (Ky.) Select Cas. 411; *S. C.* 12 Am. Dec. 325; *Hawker* v. *Baltimore & Ohio Railroad*, 15 West Va. 628, 636. See also 1 Taylor, Ev., 7th Eng. Ed., § 602.

Digitized by Google

Dissenting Opinion: Waite, C.J., Miller, Field, Blatchford, JJ.

MR. JUSTICE FIELD, with whom concurred THE CHIEF JUSTICE, MR. JUSTICE MILLER, and MR. JUSTICE BLATCHFORD, dissenting.

I am not able to give my assent to the judgment of the court in this case.

The statement by the physician as to the condition of the injured party, the admission of which is held to have been error, was proved by his deposition to have been correct. Every material fact also which it contained was established by his independent testimony. It would not be in accordance with the usual action of men, in the ordinary concerns of life, to reject as incompetent evidence, a written statement thus made by a physician as to the condition of a patient under his charge, when it is subsequently proved by him to be true in all its details. And it should seem, that evidence upon which every one would act without hesitation in the common affairs of life, ought not to be excluded from consideration, except for clear reasons of policy, or long established rules to the contrary, when those affairs are brought into litigation before the courts.

If the recollection of the condition of the patient had passed from the mind of the physician, and he could still have testified that the statement made by him when the patient was under his charge was true, it would have been admissible. It is difficult, therefore, to find any just reason for excluding it, from the fact that, in corroboration of its truth, the physician also testified to the facts therein stated.

The admission of the declaration of the engineer, as to the rate of speed of the train at the time of the accident, was, in my judgment, admissible as part of the *res gestæ*. The rails and cross-ties of the road were in a bad condition. Some of the rails had been used for over forty years, and some of the cross-ties were decayed, and it appears that the accident was caused by a decayed cross-tie and a broken rail.

As the declaration was made between ten and thirty minutes after the accident, we may well conclude that it was made in sight of the wrecked train, and in presence of the injured parties, and whilst surrounded by excited passengers. The

Digitized by Google

engineer was the only person from whom the company could have learned of the exact speed of the train at the time; to him it would have been obliged to apply for information on that point. It would seem, therefore, that his declaration, as that of its agent or servant, should have been received. The modern doctrine has relaxed the ancient rule, that declarations, to be admissible as part of the *res gestæ*, must be strictly contemporaneous with the main transaction. It now allows evidence of them, when they appear to have been made under the immediate influence of the principal transaction, and are so connected with it as to characterize or explain it.

The case of the *Hanover Railroad Company* v. *Coyle*, 55 Penn. St. 396, 402, is in point. There it appeared that a peddler's wagon was struck by a locomotive and the peddler was injured; and the question was as to the admissibility of the declaration of the engineer that the train was behind time, to show carelessness and negligence. The Supreme Court of Pennsylvania held it admissible. "We cannot say," said the court, "that the declaration of the engineer was no part of the *res gestæ*. It was made at the time, in view of the goods strewn along the road by the breaking up of the boxes, and seems to have grown directly out of and immediately after the happening of the fact. The negligence complained of being that of the engineer himself, we cannot say that his declarations, made upon the spot, at the time, and in view of the effects of his conduct, are not evidence against the company as a part of the very transaction itself."

What time may elapse between the happening of the event in respect to which the declaration is made, and the time of the declaration, and yet the declaration be admissible, must depend upon the character of the transaction itself. An accident happening to a railway train, by which a car is wrecked, would naturally lead to a great deal of excitement among the passengers on the train, and the character and cause of the accident would be the subject of explanation for a considerable time afterwards by persons connected with the train. The admissibility of a declaration, in connection with evidence of the principal fact, as stated by Greenleaf, must be determined by

Digitized by Google

the judge according to the degree of its relation to that fact, and in the exercise of a sound discretion; it being extremely difficult, if not impossible, to bring this class of cases within the limits of a more particular description. The principal points of attention are, he adds, whether the declaration was contemporaneous with the main fact, and so connected with it as to illustrate its character.

But, independently of this consideration, there is another answer to the objection taken to the admissibility of the declaration of the engineer. It was immaterial in any view of the case. The engagement of a railroad company is to carry its passengers safely; and, for any injury arising from a defect in its road, or in the rails or ties, which could have been guarded against by the exercise of proper care, it is liable. Its liability does not depend upon the speed of the train, whether it was one mile or eighteen miles an hour. Though as a carrier of passengers it is not, like a carrier of property, an insurer against all accidents except those caused by the act of God or the public enemy, it is charged with the utmost care and skill in the performance of its duty; and this implies not merely the utmost attention in respect to the movement of the cars, but also to the condition of the road, and of its ties, rails, and all other appliances essential to the safety of the train and passengers. For all injuries through negligence, to which the passenger does not contribute by his own acts, it is liable. So it matters not what the speed of the train was in the case at bar, nor what was the declaration of the engineer in that respect.

I am authorized to state that the Chief Justice, Mr. Justice Miller, and Mr. Justice Blatchford concur in this dissent.

Digitized by Google

PHILADELPHIA FIRE ASSOCIATION *v.* NEW YORK.

ERROR TO THE SUPREME COURT OF THE STATE OF NEW YORK.

Argued October 26, 1886.—Decided November 15, 1886.

A Pennsylvania fire insurance corporation began doing business in New York in 1872, and continued it afterwards till 1882, receiving from year to year certificates of authority from the proper officer, under a statute of New York passed in 1853. Chapter 694 of the laws of New York, of 1865 as amended by c. 60 of the laws of 1875, provided that whenever the laws of any other State should require from a New York fire insurance company a greater license fee than the laws of New York should then require from the fire insurance companies of such other State, all such companies of such other State should pay in New York a license fee equal to that imposed by such other State on New York companies. In 1873, Pennsylvania passed a law requiring from every insurance company of another State, as a prerequisite to a certificate of authority, a yearly tax of 3 per cent. on the premiums received by it in Pennsylvania during the preceding year. In 1882, the insurance officer of New York required the Pennsylvania corporation to pay, as a license fee, a tax of 3 per cent. on the premiums received by it in New York in 1881. In a suit against such corporation, in a court of New York, to recover such tax, it was set up as a defence, that the tax was unlawful, because the corporation was a "person" within the "jurisdiction" of New York, and "the equal protection of the laws" had been denied to it, in violation of a clause in the Fourteenth Amendment to the Constitution of the United States. On a writ of error to review the judgment of the highest court of New York, overruling such defence: *Held*, that such clause had no application, because, the defendant, being a foreign corporation, was not within the jurisdiction of New York, until admitted by the State on a compliance with the condition of admission imposed, namely, the payment of the tax required as a license fee.

The business carried on by the corporation in New York was not a transaction of commerce.

The opinion of the highest court of New York, duly authenticated by the proper officer, and transmitted to this court with the record, in compliance with the 8th Rule, was examined to aid in determining whether that court decided such Federal question against the defendant.

This was a writ of error to the Supreme Court of the State of New York. Under the provisions of § 1279 of the Code of Civil Procedure of New York, the People of the State of New York and the Fire Association of Philadelphia, a Pennsyl-

Digitized by Google

vania corporation, being parties to a question in difference which might be the subject of an action, agreed upon a case containing a statement of the facts on which the controversy depended, and presented a written submission of it to the Supreme Court of New York, so that the controversy became an action. The material facts set forth in the case were these:

"The defendant, The Fire Association of Philadelphia, is a corporation created and organized in the year 1820, by and under the laws of the State of Pennsylvania, for the transaction of the business of fire insurance, and having its principal place of business in the City of Philadelphia. In the year 1872 it established an agency in the State of New York, which it has ever since maintained. No question is here raised but that it has uniformly complied with all the requirements and conditions imposed by the laws of this State upon fire insurance companies from other States establishing and maintaining agencies in this State, except the payment of the tax now in dispute, upon premiums received by it in 1881 upon risks located wthin the State of New York, and which is the subject of this controversy, and has received from year to year certificates of authority from the Superintendent of the Insurance Department of this State, as provided to be issued under the Act, c. 466 of the laws of 1853, and the subsequent Acts amendatory thereof.

"The Act of the People of the State of New York, passed May 11, 1865, three fifths being present, being c. 694 of the laws of 1865, entitled 'An Act in relation to the deposits required to be made, and the taxes, fines, fees, and other charges payable by insurance companies of sister States,' as amended by the Act of 1875, c. 60, provides as follows, viz.: 'Whenever the existing or future laws of any other State of the United States shall require of insurance companies, incorporated by or organized under the laws of this State, and having agencies in such other States, or of the agents thereof, any deposit of securities in such State for the protection of policy-holders or otherwise, or any payment for taxes, fines, penalties, certificates of authority, license fees,

Digitized by Google

or otherwise, greater than the amount required for such purposes from similar companies of other States by the then existing laws of this State, then, and in every such case, all companies of such States establishing, or having heretofore established, an agency or agencies in the State, shall be and are hereby required to make the same deposit for a like purpose in the Insurance Department of the State, and to pay the Superintendent of said Department for taxes, fines, penalties, certificates of authority, license fees, and otherwise, an amount equal to the amount of such charges and payments imposed by the laws of such State upon the companies of this State and the agents thereof; and the Superintendent of the Insurance Department is hereby authorized to remit any of the fees and charges which he is required to collect by existing laws, except such as he is required to collect under and by virtue of this Act, provided, however, that no discrimination shall be made in favor of one company over any other from the same State.'

"The State of Pennsylvania, by an Act passed April 4, 1873, and ever since in force, enacted as follows, viz.: 'Section 10. No person shall act as agent or solicitor in this state of any insurance company of another state, or foreign government, in any manner whatever relating to risks, until the provisions of this Act have been complied with on the part of the company or association, and there has been granted to said company or association, by the commissioner, a certificate of authority, showing that the company or association is authorized to transact business in this state; and it shall be the duty of every such company or association, authorized to transact business in this state, to make report to the commissioner in the month of January of each year, under oath of the president or secretary thereof, showing the entire amount of premiums of every character and description received by said company or association in this state, during the year or fraction of a year ending with the thirty-first day of December preceding, whether said premiums were received in money or in the form of notes, credits or any other substitute for money, and pay into the state treasury a

Digitized by Google

tax of three per centum upon said premiums; and the commissioner shall not have power to grant a renewal of the certificate of said company or association until the tax aforesaid is paid into the state treasury.'

"In the year 1881 the defendant, through its authorized agents in the State of New York, received for insurance against loss or injury by fire, upon property located within the State of New York, premiums to the aggregate amount of $196,170.22. The Superintendent of the Insurance Department of New York claimed that the defendant ought to pay, as a tax, for the year 1881, $1848.45, with proper interest, being the amount arrived at by deducting from $5885.10, (which would be a tax of three per cent. on $196,170.22,) the sum of $4036.65, which the defendant, as a Pennsylvania corporation, had paid as a tax on premiums, during 1881, under laws of New York in force in 1881, other than the Act of 1865, as amended by the Act of 1875. The case then states, that 'the controversy between the parties is, as to whether the defendant is liable to pay any tax to the Superintendent of the Insurance Department of the State, upon the said premiums received by it in the year 1881, and, if any, what amount;' that 'the defendant claims that it is not liable to the plaintiffs for any amount, insisting, first, that the said Act of 1865, as amended by the Act of 1875, is unconstitutional and void, and not a legitimate exercise of legislative power,' and making further claims as to the amount due from it if the Act in question is valid; that 'the question submitted to the court for decision upon the foregoing statement of facts is, whether the defendant is liable to pay to the plaintiffs, or to the superintendent, the whole, or any, and, if any, what part of the' $1848.45; and that judgment is to be entered according to its decision."

The agreed case having been heard by the Supreme Court in general term, as required by law, it rendered a judgment to the effect that the defendant was not liable to pay any part of such amount claimed by the superintendent. Two of the three judges holding the court concurred in that judg-

Digitized by Google

ment. The third dissented. The opinions of the majority and minority accompany the record. The majority held that the statutes of New York in question were void because in conflict with the Constitution of New York, and did not discuss any question arising under the Constitution of the United States. The dissenting judge differed with the majority as to the question adjudged by them, and further said: "Nor can I agree with the claim that this statute is contrary to the Fourteenth Amendment to the Constitution of the United States."

The plaintiffs having appealed to the Court of Appeals of New York, that court reversed the judgment of the Supreme Court, and rendered judgment for the plaintiffs for $1848.45, with interest and costs, and remitted the record to the Supreme Court, where a judgment to that effect was entered, to review which the defendant brought a writ of error. The Court of Appeals, in its decision, 92 N. Y. 311, after overruling the view taken by the majority of the judges of the Supreme Court as to the validity of the statute under the Constitution of New York, proceeded to consider its constitutionality under that clause of the Fourteenth Amendment to the Federal Constitution which commands that no State shall "deny to any person within its jurisdiction the equal protection of the laws." It held that that clause had no application to the rights of the defendant, because, being a foreign corporation, it was not within the jurisdiction of New York, until it was admitted by the State, upon a compliance with the conditions of admission which the State imposed and had the right to impose.

Mr. Joseph H. Choate, for plaintiff in error, cited: *Santa Clara County* v. *Southern Pacific Railroad*, 118 U. S. 394, 396; *San Mateo County* v. *Southern Pacific Railroad*, 13 Fed. Rep. 722; *County of Santa Clara* v. *Southern Pacific Railroad*, 18 Fed. Rep. 385, 397–404; *Kentucky Railroad Tax Cases*, 115 U. S. 321; *Barbier* v. *Connolly*, 113 U. S. 27; *Soon Hing* v. *Crowley*, 113 U. S. 703; *Yick Wo* v. *Hopkins*, 118 U. S. 356; *Lafayette Ins. Co.* v. *French*, 18 How. 404;

Digitized by Google

Ex parte Schollenberger, 96 U. S. 369; *Railroad Co.* v. *Koontz*, 104 U. S. 5, 10–13; *St. Clair* v. *Cox*, 106 U. S. 350; *Ex parte Siebold*, 100 U. S. 371, 376; *Boyd* v. *United States*, 116 U. S. 616, 635; *Missouri* v. *Lewis*, 101 U. S. 22, 31; *Pearson* v. *Portland*, 69 Maine, 278; *Portland* v. *Bangor*, 65 Maine, 120; *Northwestern Fertilizer Co.* v. *Hyde Park*, 3 Bissell, 480; *Strauder* v. *West Virginia*, 100 U. S. 303, 311; *Bureau Co.* v. *Chicago, Burlington, & Quincy Railroad*, 44 Ill. 229; *Allhands* v. *People*, 82 Ill. 234; *Hughes* v. *Cairo*, 92 Ill. 339; *State Railroad Tax Cases*, 92 U. S. 575; *Missouri Pacific Railway* v. *Humes*, 115 U. S. 512, 523; *Lexington* v. *McQuillan*, 9 Dana, 513; *S. C.* 35 Am. Dec. 159; *Doyle* v. *Continental Ins. Co.*, 94 U. S. 535; *Ins. Co.* v. *Morse*, 20 Wall. 445; *Ducat* v. *Chicago*, 10 Wall. 410.

Mr. Denis O'Brien, Attorney General of New York, for defendant in error, cited; *Elmwood* v. *Marcy*, 92 U. S. 289; *Fairfield* v. *Gallatin County*, 100 U. S. 47; *Post* v. *Supervisors*, 105 U. S. 667; *Bank of Augusta* v. *Earle*, 13 Pet. 519; *Paul* v. *Virginia*, 8 Wall. 168; *Liverpool Ins. Co.* v. *Massachusetts*, 10 Wall. 566; *Cooper M'fg Co.* v. *Ferguson*, 113 U. S. 727; *Nathan* v. *Louisiana*, 8 How. 73; *Morse* v. *Home Ins. Co.*, 30 Wis. 496; *S. C.* in error, 20 Wall. 445; *Drake* v. *Doyle*, 40 Wis. 175; *Continental Co.* v. *Doyle*, 40 Wis. 220; *Doyle* v. *Continental Ins. Co.*, 94 U. S. 535; *Runyan* v. *Coster*, 14 Pet. 122; *Covington Draw Bridge Co.* v. *Shepherd*, 20 How. 233; *Railroad Co.* v. *Koontz*, 104 U. S. 5; *McCullough* v. *Maryland*, 4 Wheat. 316, 430; *State Tax on Foreign Held Bonds*, 15 Wall. 300; *Ex parte Kinney*, 3 Hughes, 9; *Missouri* v. *Lewis*, 101 U. S. 22, 31; *Kentucky Railroad Tax Cases*, 115 U. S. 321, 337.

Mr. Justice Blatchford, after stating the case as above reported, delivered the opinion of the court.

The defendant claims here the benefit of the Fourteenth Amendment, and a question has occurred as to whether the record presents that point for our review. There being no pleadings, the obvious place to look for the claim would be the

Digitized by Google

agreed statement of facts. But all that is there said is, that the defendant insists that the statute is "unconstitutional and void and not a legitimate exercise of legislative power." The question was considered, in both the Supreme Court and the Court of Appeals, as to the validity of the statute, under the Constitution of New York, as being a law made to depend for its operation on the legislation of a foreign state, and thus an illegitimate exercise of legislative power. This contention is fairly within the words of the agreed statement, and, if it depended wholly on that statement to determine whether the record raises a Federal question, some doubt might exist. But in view of what was said in *Murdock* v. *Memphis*, 20 Wall. 590, 633, in *Gross* v. *United States Mortgage Co.*, 108 U. S. 477, and in *Adams County* v. *Burlington & Missouri Railroad Co.*, 112 U. S. 123, we think that we are at liberty to look into the opinion of the Court of Appeals, a copy of which, duly authenticated by the proper officer, is transmitted to us with the record, in compliance with our 8th Rule, for the purpose of aiding in determining what was decided by that court. From that opinion it appears that the court not only decided against the defendant all the questions other than Federal which were raised, including two under the Constitution of New York, but also decided against it the Federal question referred to. If the court had decided in its favor any one of the other questions which went to the whole cause of action, there would have been no necessity for considering the Federal question. But as it was, the decision of that question became necessary to the disposition of the case, and was fully considered, not *sua sponte*, but as a point presented by the defendant.

The provision of the Fourteenth Amendment, which went into effect in July, 1868, is, that no State shall "deny to any person within its jurisdiction the equal protection of the laws." The first question which arises is, whether this corporation was a person within the jurisdiction of the State of New York, with reference to the subject of controversy and within the meaning of the Amendment.

The defendant, on the assumption that if it was within the jurisdiction of the State of New York, it was, though a foreign

Digitized by Google

corporation, "a person," and so entitled to the benefit of the Amendment, contends that it was within such jurisdiction. The argument is, that it established an agency within the State in 1872, which it had ever since maintained; that it complied, from year to year, with all the requirements and conditions imposed by the laws of the State on foreign fire insurance companies doing business in the State; that it received from year to year certificates of authority from the Superintendent of the Insurance Department, as provided by statute; that, under those circumstances, it was legally within the State and within its jurisdiction; that, being in the State, by permission of the State, continuously from 1872 to 1882, the State imposed on it, while there, in 1882, an unequal and unlawful burden; and that the New York Act of 1865 did not come into effect as to Pennsylvania corporations until the Pennsylvania Act of 1873 was passed, at which time the defendant had already been a year in the State.

But we are unable to take that view of the case. In *Paul v. Virginia*, 8 Wall. 168, at December Term, 1868, a statute of Virginia required that every insurance company not incorporated by Virginia should, as a condition of carrying on business in Virginia, deposit securities with the State treasurer, and afterwards obtain a license; and another statute made it a penal offence for a person to act in Virginia as agent for an insurance company not incorporated by Virginia, without such license. A person having acted as such agent without a license, and been convicted and fined under the statute, this Court held that there had been no violation of that clause of Article 4, § 2, of the Constitution of the United States which provides that "the citizens of each State shall be entitled to all privileges and immunities of citizens in the several States;" nor any violation of the clause in Article 1, § 8, giving power to Congress "to regulate commerce with foreign nations and among the several States." The view announced was, that corporations are not citizens within the clause first cited, on the ground that the privileges and immunities secured to the citizens of each State in the several States, are those which are common to the citizens of the latter States,

Digitized by Google

under their Constitutions and laws, by virtue of their being citizens; and that, as a corporation created by a State is a mere creation of local law, even the recognition of its existence by other States, and the enforcement of its contracts made therein, depend purely on the comity of those States — a comity which is never extended where the existence of the corporation or the exercise of its powers is "prejudicial to their interests or repugnant to their policy." And the court, speaking by Mr. Justice Field, said: "Having no absolute right of recognition in other States, but depending for such recognition and the enforcement of its contracts upon their assent, it follows, as a matter of course, that such assent may be granted upon such terms and conditions as those States may think proper to impose. They may exclude the foreign corporation entirely, they may restrict its business to particular localities, or they may exact such security for the performance of its contracts with their citizens as in their judgment will best promote the public interest. The whole matter rests in their discretion." As to the power of Congress to regulate commerce among the several States, the court said, that while the power conferred included commerce carried on by corporations as well as that carried on by individuals, "issuing a policy of insurance is not a transaction of commerce." This decision only followed the principles laid down in the earlier cases of *Bank of Augusta* v. *Earle*, 13 Pet. 519, 588, and *Lafayette Ins. Co.* v. *French*, 18 How. 404.

The same rulings were followed in *Ducat* v. *Chicago*, 10 Wall. 410, where it was said that the power of a State to discriminate between her own corporations and those of other States desirous of transacting business within her jurisdiction being clearly established, it belonged to the State to determine as to the nature or degree of discrimination, "subject only to such limitations on her sovereignty as may be found in the fundamental law of the Union."

Other cases to the same effect are *Liverpool Ins. Co.* v. *Massachusetts*, 10 Wall. 566; *Doyle* v. *Continental Ins. Co.*, 94 U. S. 535; and *Cooper M'fg Co.* v. *Ferguson*, 113 U. S. 727.

Digitized by Google

As early as 1853, the State of New York, by a statute, c. 466, required of every fire insurance company incorporated by any other State or any foreign government, as a prerequisite to doing business in the State, that it should file an appointment of an attorney on whom process was to be served, and a statement of its pecuniary condition, and procure from a designated public officer a certificate of authority stating that the company had complied with all the requisitions of the statute; and also required the renewal from year to year of the statement and evidence of investments; and provided that such public officer, on being satisfied that the capital of the company and its securities and investments remained secure, should furnish a renewal of the certificate of authority. A violation of the provisions was made a penal offence. This act, with immaterial amendments, is still in force.

This Pennsylvania corporation came into the State of New York to do business by the consent of the State, under this Act of 1853, with a license granted for a year, and has received such license annually, to run for a year. It is within the State for any given year under such license, and subject to the conditions prescribed by statute. The State, having the power to exclude entirely, has the power to change the conditions of admission at any time, for the future, and to impose as a condition the payment of a new tax, or a further tax, as a license fee. If it imposes such license fee as a prerequisite for the future, the foreign corporation, until it pays such license fee, is not admitted within the State or within its jurisdiction. It is outside, at the threshold, seeking admission, with consent not yet given. The Act of 1865 had been passed when the corporation first established an agency in the State. The amendment of 1875 changed the Act of 1865 only by giving to the superintendent the power of remitting the fees and charges required to be collected by then existing laws. Therefore, the corporation was at all times, after 1872, subject, as a prerequisite to its power to do business in New York, to the same license fee its own State might thereafter impose on New York companies doing business in Pennsylvania. By going into the State of New York in 1872, it assented to such prerequisite as

Digitized by Google

a condition of its admission within the jurisdiction of New York. It could not be of right within such jurisdiction, until it should receive the consent of the State to its entrance therein under the new provisions, and such consent could not be given until the tax, as a license fee for the future, should be paid.

It is not to be implied, from anything we have said, that the power of a State to exclude a foreign corporation from doing business within its limits is to be regarded as extending to an interference with the transaction of commerce between that State and other States by a corporation created by one of such other States.

Judgment affirmed.

MR. JUSTICE HARLAN dissenting.

Under the decision just rendered, the State of New York is permitted to subject a corporation of another State, within her limits by her consent, to higher taxes in respect to its business than is imposed there upon similar corporations of other States.

At the last term of this court, when counsel were about to enter upon the argument of the case of *Santa Clara County* v. *Southern Pacific Railroad*, 118 U. S. 394, 396 — involving the validity of a system devised by one of the States for the taxation of railroad corporations of a certain class — the Chief Justice observed: "The court does not wish to hear argument on the question whether the provision in the Fourteenth Amendment to the Constitution, which forbids a State to deny to any person within its jurisdiction the equal protection of the laws, applies to these corporations. We are all of opinion that it does." This, it is true, was said in regard to corporations of the particular State whose legislation was assailed as unconstitutional; but it is equally clear that a corporation of one State, doing business in another State by her consent, is to be deemed, at least *in respect to that business*, a "person" within the jurisdiction of the latter State, in the meaning of the Fourteenth Amendment.

The denial of the equal protection of the laws may occur in

Digitized by Google

various ways. It will most often occur in the enforcement of laws imposing taxes. An individual is denied the equal protection of the laws if his property is subjected by the State to higher taxation than is imposed upon like property of other individuals in the same community. So, a corporation is denied that protection when its property is subjected by the State, under whose laws it is organized, to more burdensome taxation than is imposed upon other domestic corporations of the same class. So, also, a corporation of one State, doing business, by its agents, in another State, by the latter's consent, is denied the equal protection of the laws if its business there is subjected to higher taxation than is imposed upon the business of like corporations from other States. These propositions seem to me to be indisputable. They are necessarily involved in the concession that corporations, like individuals, are entitled to the equal protection of the laws.

The plaintiff in error is a corporation of Pennsylvania. In 1872 it established and has ever since maintained an agency in the State of New York. It had its agents there when the taxes for 1881, here in question, were assessed.

The laws of New York prescribe certain conditions precedent to the right of a fire insurance company from another State to transact business there. It must possess a certain amount of actual capital; appoint an attorney in the State, service of process upon whom is to be "deemed a valid personal service upon the corporation" in any action "upon a policy or liability issued or contracted while such corporation transacted business" there; file in the insurance department a certified copy of its charter, together with a statement, verified by the oath of its chief officer and secretary, showing the name of the company, place where located, amount of its capital and assets, the extent to which its real estate is encumbered, the par and market value of all shares of stock held by it, the estimated value of its bonds, mortgages, and other securities, the extent of its indebtedness, the amount of its losses, adjusted and unpaid or incurred and in process of adjustment, the losses disputed, and the claims existing against it. It is also provided that no business shall be transacted in

Digitized by Google

the State by the agent of any company from another State, while its capital is impaired to the extent of twenty per cent. It further requires from such companies an annual statement, showing in detail the items making up their capital, and the deductions to be made therefrom. It was made the duty, first of the State comptroller, and subsequently of the superintendent of insurance — these requirements of the statute being first complied with — to issue to the company, thus seeking admission into the State, a certificate showing its lawful right to transact business within her limits. Laws of N. Y., 1853, c. 466; Laws of 1862, c. 6, § 1, and c. 367, § 5; 1871, c. 888; Laws of 1874, c. 331, § 1; Laws of 1875, c. 555, § 1.

That the plaintiff in error conformed to these statutory provisions, and was admitted into New York for the transaction of business is shown by the agreed case, from which it appears that it "has uniformly complied with all the requirements and conditions imposed by the laws of this State upon fire insurance companies from other States establishing and maintaining agencies in this State, except the payment of the tax now in dispute upon premiums received by it in 1881 upon risks located within the State of New York, and which is the subject of this controversy, and has received from year to year *certificates of authority from the superintendent of the insurance department of this State, as provided to be issued under the act, c.* 466 *of the laws of* 1853, *and the subsequent acts amendatory thereof.*"

In view of these admitted facts, how can it be said that this Pennsylvania corporation was not, in respect to its corporate business, within the jurisdiction of New York during the year when the tax in dispute accrued? That a corporation of one State, doing business in another State by the latter's consent, evidenced by the official certificate given by her insurance department in conformity with her laws, and liable, precisely as domestic corporations are, to be brought into her courts, through service of process upon its duly appointed attorney or agent, in reference to any business transacted or liability incurred by it there, is to be deemed within the jurisdiction of that State, seems to me entirely clear. In *Ex parte Schollen-*

Digitized by Google

berger, 96 U. S. 369, 374, it was decided that a foreign insurance company, doing business in Pennsylvania, under the authority of a statute of that Commonwealth requiring, as a condition precedent to its being there, an agreement that judicial process served upon its agent should have the same effect as if served upon the corporation, was, within the meaning of the act of Congress of 1875, "found" in that State so as to give jurisdiction to the courts of the United States sitting in that State of suits brought there against such company, accompanied by service of process upon its agent. The subject was again considered in *St. Clair* v. *Cox*, 106 U. S. 350, 357, where it was said that there was no sound reason why, in the case of an insurance company doing business in another State, by an agent, under statutes such as those referred to, it should not be deemed to be represented in the latter by such agent, and held responsible for its obligations and liabilities there incurred. See also *Railroad Co.* v. *Harris*, 12 Wall. 65; *Railway Co.* v. *Whitton*, 13 Wall. 270, 285.

It was said in argument that the plaintiff in error entered New York with the knowledge, derived from the act of 1865, that if Pennsylvania thereafter subjected New York insurance companies to higher taxes than the latter State imposed upon Pennsylvania corporations of the same class doing business in New York, the taxes levied upon it would be correspondingly increased; therefore, it is argued, the entrance of the plaintiff in error into New York was subject to the reserved right of that State thus to increase the taxes upon its business. The same idea is embodied in the suggestion that New York made it a prerequisite, from and after 1865, to the right of a fire insurance corporation of another State to transact business in New York, that it should pay such increased taxes, however much they might be in excess of the taxes imposed there upon corporations of the same class from the remaining States. Now, it is submitted: 1. That no such obligation was imposed by the statute upon the plaintiff in error as a prerequisite to its right to enter New York and transact business there. The agreed case shows not only that the insurance department of New York has certified its right to do business in that State,

Digitized by Google

but that the certificate was made as provided in the Act of 1853 and the acts amendatory thereof. Besides, there is no clause in the statute directing that department to withhold or to revoke a certificate upon the failure or refusal of the company to pay these increased taxes. The regularity and validity of that certificate was not questioned in argument, is not now disputed, and there is not a word in the statute to the effect that the *payment* of these increased taxes is a *prerequisite* to the right of the company to remain in the State and transact business. Indeed, it is evident that the State purposely avoided establishing any such prerequisite to the right to enter her limits. She only seeks, after admitting the plaintiff in error and certifying its right to do business, to subject it to the taxation in question. 2. The power of New York to impose this increased tax surely cannot depend upon the fact that she gave notice of what she would do in the contingency expressed in the Act of 1865. Such notice neither creates a power to do that which the State could not otherwise constitutionally do, nor makes it the duty of the plaintiff in error to submit to an illegal exaction. At last, the real question presented is, whether Pennsylvania corporations can be subjected to higher taxes in New York, than are imposed there upon corporations of the same class from other States.

It is said that a State may exclude altogether from its borders a corporation of another State, or may admit it upon such terms or conditions as she may elect to prescribe. It is quite true that general language to that effect was employed in *Paul* v. *Virginia*, 8 Wall. 168, where the only question necessary to be determined was as to the validity of a statute of Virginia, providing that before an insurance company, not incorporated by that State, should carry on business there, it must obtain a license therefor, and deposit with the State treasurer, as security for its engagements, bonds of a specified character and amount. In the course of the opinion which disposed of that question, it was said that a corporation of one State, "having no absolute right of recognition in other States, but depending for such recognition and the enforcement of its contracts upon their assent, it follows, as a matter of course,

Digitized by Google

that such assent may be granted upon such terms and conditions as those States may think proper to impose. They may exclude the foreign corporation entirely; they may restrict its business to particular localities, or they may exact such security for the performance of its contracts with their citizens as in their judgment will best promote the public interests. The whole matter rests in their discretion." But, I submit that it is the settled doctrine of this court, that the terms and conditions so prescribed must not be repugnant to the Constitution of the United States, or inconsistent with any right granted or secured by that instrument. In *Ducat* v. *Chicago*, 10 Wall. 410, 415, it was said by Mr. Justice Nelson, speaking for the court, that, in respect to the nature or degree of discrimination which a State may make between her own corporations and those of other States, "it belongs to the State to determine, subject only to such limitations on her sovereignty as may be found in the fundamental law of the Union." It was so decided in *Insurance Co.* v. *Morse*, 20 Wall. 445, 455, 456, where the question was as to the validity of a statute of Wisconsin relating to the admission into that State of fire insurance companies incorporated by other States. Besides the condition that they should designate some attorney in Wisconsin upon whom process against the company could be served, it imposed the further one that it should file in the proper office an agreement stipulating that it would not remove to the courts of the United States any suit brought against it in the local courts. An insurance company of New York established an agency in Wisconsin, and complied in all respects with these conditions; it filed the required agreement. In support of the validity of those conditions, the State relied upon the very language above quoted from *Paul* v. *Virginia*. But the court was careful to say that that language must be understood with reference to the facts in the case and to the question to be decided, which was stated to be simply "whether the State might require a foreign insurance company to take a license for the transaction of its business, giving security for the payment of its debts." Care was taken to further announce, that the general language employed in *Paul* v. *Virginia* was not in-

Digitized by Google

tended to impair the language in *La Fayette Ins. Co.* v. *French*, 18 How. 404, 407, where the court, speaking by Mr. Justice Curtis, said: "A corporation created by Indiana can transact business in Ohio only with the consent, express or implied, of the latter State. This consent may be accompanied by such conditions as Ohio may think fit to impose, and these conditions must be deemed valid and effectual by other States and by this court; *provided*, they are not repugnant to the Constitution and laws of the United States, or inconsistent with those rules of public law which secure the jurisdiction and authority of each State from encroachment of all others, or that principle of natural justice which forbids condemnation without opportunity for defence." Upon these grounds it was held, in *Insurance Co.* v. *Morse*, that the Wisconsin statute, so far as it required insurance companies of other States to stipulate that they would not exercise the right to have suits against them removed to the national courts, was void, equally because it created an obstruction to the exercise of a privilege granted by the Constitution and laws of the United States, and tended to oust the courts of the Union of a jurisdiction conferred upon them. Much that was said in that case is pertinent to the present one. After observing that the courts would not enforce an agreement between a citizen of New York and a citizen of Wisconsin, that the former would, in no event, resort to the Federal courts sitting in Wisconsin for the protection of his rights of property, or an agreement between the same parties, upon whatever consideration, that the citizen of New York would in no case, when called into the courts, either of Wisconsin or of the Federal courts sitting in that State, demand a jury to determine his rights of property, but would submit such rights to arbitration or to the decision of a single judge, the court said: "We see no difference in principle between the cases supposed and the case before us. Every citizen is entitled to resort to all the courts of the country, and to invoke the protection which all the laws or all those courts may afford." The court further said that the right of the insurance company to remove the suit was "denied to it by the State court on the ground that it had made the agreement re-

Digitized by Google

ferred to, and that the statute of the State authorized and required the making of the agreement. We are not able to distinguish this agreement and this requisition, on principle, from a similar one made in the case of an individual citizen of New York. A corporation has the same right to the protection of the laws as a natural citizen, and the same right to appeal to all the courts of the country. The rights of an individual are not superior, in this respect, to that of a corporation. The State of Wisconsin can regulate its own corporations and the affairs of its own citizens, in subordination, however, to the Constitution of the United States. The requirement of an agreement like this from their own corporations would be *brutum fulmen*, because they possess no such right under the Constitution of the United States. A foreign citizen, whether natural or corporate, in this respect possesses a right not pertaining to one of her own citizens. There must necessarily be a difference between the status of the two in this respect."

The only difference between *Insurance Co.* v. *Morse* and the present case is, that in the former the New York corporation expressly agreed, in writing, that it would not exercise its constitutional privilege of removing suits against it into the courts of the Union while the Pennsylvania corporation received an official certificate of its right to transact business in New York with notice derived from the act of 1865, that that State would after 1873 — the date of the Pennsylvania statute — claim from it higher taxes than she imposed upon like corporations from the remaining States doing business in her limits by her consent. If the plaintiff in error, by merely maintaining its agencies in New York, is to be held to have impliedly agreed to submit to such increased taxation, is that anything more than an implied agreement that it would not assert a right secured to it by the Constitution of the United States? Can it be that a corporation is estopped to claim the benefit of the constitutional provision securing to it the equal protection of the laws simply because it voluntarily entered and remained in a State which has enacted a statute denying such protection to it and to like corporations from the same State? Is the right to that protection any less valuable or fundamental than the right to

Digitized by Google

remove a suit into the courts of the Union for trial? Will it be held that an express agreement by a corporation not to exercise the latter right is void and not enforceable, but that a local statute denying the equal protection of the laws to a corporation will be upheld, simply because that corporation came within the jurisdiction of the State which assumed to make such denial, and received from her officers, acting in conformity with her laws, a certificate of its right to transact business there? Will effect be given in one case to what (erroneously, I think) is called an implied agreement to surrender a constitutional right, while an express agreement in the other to surrender a constitutional right is held to be invalid?

Even if it were conceded that a State, which provides for the organization, under her own laws, of corporations for the transaction of every kind of business, could arbitrarily exclude from her limits similar corporations from the remaining States, and declare all contracts made within her jurisdiction with corporations from other States, to be void—concessions to be made only for the purposes of this case—it would not follow that she could subject corporations of other States, doing business within her limits under a license from the proper department, to higher taxes than she imposes upon other corporations of the same class from the remaining States. The plaintiff in error having been in 1881 lawfully within New York, by its agents, cannot be denied there the equal protection of the laws because the State which created it may have adopted a system of taxation different from that devised by New York. The case, in its legal aspects, is precisely the same as if Pennsylvania had never passed the statute of 1873, but New York had, in that year, imposed upon fire insurance companies from Pennsylvania higher taxes than she imposed upon similar corporations from other States.

It would seem to be the result of the decision in this case, that New York may prescribe such varying rates of taxation upon insurance corporations of the remaining thirty-seven States, within her jurisdiction, as she chooses—the rate for corporations from each State differing from the rate established for corporations of the same class from all other States,

Digitized by Google

and the rate in respect to corporations of other States being higher than she imposes upon her own corporations of the same class. Such legislation would be a species of commercial warfare by one State against the others, and would be hostile to the whole spirit of the Constitution, particularly the Fourteenth Amendment, securing to all persons within the jurisdiction of the respective States the equal protection of the laws.

For the reasons which have been stated, I feel obliged to withhold my assent to the opinion and judgment of the court.

HOME INSURANCE COMPANY v. NEW YORK.

ERROR TO THE SUPREME COURT OF THE STATE OF NEW YORK.

Argued October 25, 26, 1886. — Decided November 15, 1886.

The State of New York by statute imposed a tax upon the "corporate franchise or business" of corporations within the State, of one quarter mill upon the capital stock for each one per cent. of dividend of six per cent. or over. The Home Insurance Company claimed exemption from this tax upon so much of its capital as was invested in bonds of the United States which, by the acts of Congress under which they were issued, were exempt from State taxation. In a proceeding to enforce the collection of the tax, the Supreme Court of New York gave judgment for its recovery, which judgment was affirmed by the Court of Appeals of that State. This court affirms the judgment by a divided court.

This was a proceeding commenced in the Supreme Court of New York to recover a tax imposed upon the plaintiff in error under the provisions of the Act of the Legislature of that State of June 1, 1880, Laws of 1880, c. 542, as amended by the Act of May 26, 1881, Laws of 1881, c. 361. The following are the material provisions of the Act of 1881 relating to the controversy.

"SECTION 1. Chapter five hundred and forty-two of the laws of eighteen hundred and eighty, entitled 'An act to provide for raising taxes for the use of the State upon certain corpo-

Digitized by Google

rations, joint-stock companies and associations,' is hereby amended so as to read as follows:

'§ 1. Hereafter, it shall be the duty of the president or treasurer of every association, corporation or joint-stock company liable to be taxed on its *corporate franchise or business*[1] as provided in section three of this act, to make report in writing to the comptroller, annually, on or before the fifteenth day of November, stating specifically the amount of capital paid in, the date, amount and rate per centum of each and every dividend declared by their respective corporations, joint-stock companies or associations, during the year ending with the first day of said month. In all cases where any such corporation, joint-stock company or association shall fail to make or declare any dividend upon either its common or preferred stock during the year ending as aforesaid, or in case the dividend or dividends made or declared upon either its common or preferred stock during the year ending as aforesaid, shall amount to less than six per centum upon the par value of the said common or preferred stock, the treasurer and secretary thereof, after being duly sworn or affirmed to do and perform the same with fidelity, according to the best of their knowledge and belief, shall, between the first and fifteenth days of November, in each year, in which no dividend has been made or declared as aforesaid, or in which the dividend or dividends made or declared upon either its common or preferred stock amounted to less than six per centum upon the par value of said common or preferred stock, estimate and appraise the capital stock of such company upon which no dividend has been made or declared, or upon the par value of which the dividend or dividends made or declared amounted to less than six per centum, at its actual value in cash, not less, however, than the average price which said stock sold for during said year; and when the same shall have been so truly estimated and appraised, they shall forthwith forward to the comptroller a certificate thereof, accompanied by a copy of their said oath

[1] In the Act of 1880 the words "corporate franchise or business" read "capital stock."

Digitized by Google

or affirmation, by them signed, and attested by the magistrate or other person qualified to administer the same; provided, that if the comptroller is not satisfied with the valuation so made and returned, he is hereby authorized and empowered to make a valuation thereof and to settle an account upon the valuation so made by him for the taxes, penalties and interest due the State thereon; and any association, corporation or joint-stock company dissatisfied with the account so settled, may within ten days appeal therefrom *to a board consisting of the secretary of state, attorney-general and state treasurer*,[1] which board, on such appeal, shall affirm or correct the account so settled by the comptroller, and the decision of said board shall be final; but such appeal shall not stay proceedings unless the full amount of the taxes, penalties and interest as due on said account, as settled by the comptroller, be deposited with the state treasurer.'

'§ 3. Every corporation, joint-stock company or association whatever, now or hereafter incorporated or organized under any law of this State, . . . shall be subject to and pay a tax, *as a tax upon its corporate franchise or business*,[2] into the treasury of this State, annually, to be computed as follows: If the dividend or dividends made or declared by such corporation, joint-stock company or association during any year ending with the first day of November amount to six or more than six per centum upon the par value of its capital stock, then the tax to be at the rate of one-quarter mill upon the capital stock for each one per centum of dividend so made or declared; or if no dividend be made or declared, or if the dividends made or declared do not amount to six per centum upon the par value of said capital stock, then the tax to be at the rate of one and one-half mills upon each dollar of a valuation of the said capital stock made in accordance with the provision of the first section of this act, and in case any such corporation, joint-stock company or association shall have

[1] In the Act of 1880 the words from "a board," to "treasurer" read "the board of equalization."

[2] The words "as a tax upon its corporate franchise or business" are not in the Act of 1880.

Digitized by Google

more than one kind of capital stock, as for instance common and preferred stock, and upon one of said stocks a dividend or dividends amounting to six or more than six per centum upon the par value thereof, has been made or declared, and upon the other no dividend has been made or declared, or the dividend or dividends made or declared thereon amount to less than six per centum upon the par value thereof, then the tax shall be at the rate of one quarter-mill for each one per centum of dividend made or declared upon the capital stock, upon the par value of which the dividend or dividends made or declared amount to six or more than six per centum, and in addition thereto tax shall be charged at the rate of one and one half mills upon each dollar of a valuation, made also in accordance with the provisions of this act, of the capital stock upon which no dividend was made or declared, or upon the par value of which the dividend or dividends made or declared did not amount to six per centum.' "

An "Agreed Case" was made pursuant to the Code of New York, presenting State questions for determination, and also a Federal question. The parts of the Case which relate to the latter question are as follows:

"I. The Home Insurance Company is, and for more than a year prior to November 1, 1881, had been, a domestic fire insurance company.

"II. The capital stock of the Home Insurance Company at all times during the year ending November 1, 1881, was $3,000,000, divided into thirty thousand shares of the par value of one hundred dollars each, all full paid.

"III. In the month of January and also in the month of July, 1881, a dividend of $150,000 was declared by the said company. These were the only dividends declared or made during the year ending November 1, 1881, and amounted to ten per centum upon the par value of the capital stock thereof.

"IV. During the year 1881 the said company had part of its capital invested in bonds of the United States, being obligations of the United States, which, by the acts of Congress under which they are issued, are exempt from State taxation, viz.; on January 1, 1881, and when the dividend was declared in that

Digitized by Google

month it held such bonds of the par value of $3,300,000; on the first day of July, 1881, and when the dividend was declared in that month, and on November 1, 1881, and when the report hereinafter mentioned was made, it held such bonds of the par value of $1,940,000.

"V. On or before November 15, 1881, the report described in § 1 of c. 542 of the laws of 1880, as amended by c. 361 of the laws of 1881, was duly made to the then comptroller of the State of New York, on behalf of the said company.

"VI. Within fifteen days after January 1, 1882, the Home Insurance Company tendered to the then comptroller of the State of New York a tax at the rate of one and one quarter mills per cent. upon the sum of $1,060,000. The said tender was rejected by the said comptroller. . . . The said company has ever since been and now is ready and willing to pay the amount so tendered to the said comptroller if it shall be adjudged that said Acts of 1880 and 1881 are valid in respect of the tax herein controverted.

The Home Insurance Company claims: . . . (2.) That so much of the laws of New York as may require a tax to be paid upon the capital stock of the said company, without deducting from the amount so to be paid a sum bearing the same ratio thereto as the amount of the paid-in capital stock of the said company, invested in bonds of the United States, bears to the total amount of the paid-in capital stock of the said company, is unconstitutional and void."

The Supreme Court of New York at General Term adjudged that the company was liable to pay the tax. This judgment was affirmed by the Court of Appeals, 92 N. Y. 328. The case was remanded to the Supreme Court and final judgment entered there in accordance with the decision and mandate of the Court of Appeals. This writ of error was sued out to review that final judgment.

Mr. Benjamin H. Bristow for plaintiff in error. *Mr. David Willcox* was with him on the brief.

No tax can be imposed upon that part of defendant's capital invested in United States bonds. A State cannot burden the

Digitized by Google

operations of the national government by taxing its bonds without its consent. *McCulloch* v. *Maryland*, 4 Wheat. 316, 436; *Weston* v. *Charleston*, 2 Pet. 449; *Banks* v. *Mayor*, 7 Wall. 16; *People* v. *Commissioners*, 90 N. Y. 63. A tax upon the capital of a corporation is a tax upon the property in which the capital is invested. No part of the capital invested in United States bonds, therefore, is taxable. This is fully established in this court. *Bank of Commerce* v. *New York*, 2 Black, 620; *Bank Tax Case*, 2 Wall. 200. If, then, this be a tax upon capital, it is without application to the part of the capital stock of plaintiff in error invested in United States bonds.

Whether or not this is a tax upon capital is to be determined, not by the form of the statute, but by its effect. When the statute was first enacted the legislature merely imposed the tax. The following year it inserted the definition thereof "as a tax upon corporate franchise or business." But if the tax is, in its nature and effect, a tax upon capital, it is none the less so because of this amendment declaring it to be a tax upon franchise or business. The question is whether or not the tax is such as the legislature can impose. This obviously must be decided by the courts irrespective of any declaration as to the character of the tax by the legislature itself.

In *Brown* v. *Maryland*, 12 Wheat. 419, a State statute required all importers of foreign goods to take out a license and pay a fee. The court held that this was a regulation of commerce. The same in substance was ruled in *Ward* v. *Maryland*, 12 Wall. 418; *Welton* v. *Missouri*, 91 U. S. 275; *Webber* v. *Virginia*, 103 U. S. 344; and *Walling* v. *Michigan*, 116 U. S. 446.

In *Smith* v. *Turner* (*Passenger Cases*), 7 How. 283, a State statute provided that the health officer of the port of New York should collect from the masters of vessels a certain sum for each passenger. The moneys were to be used in supporting the Marine Hospital. Yet this was held to be a regulation of commerce.

In *Henderson* v. *Mayor of New York*, 92 U. S. 259, a State

Digitized by Google

statute provided that the owners of steamers bringing passengers from foreign ports should give a bond for each passenger against his becoming a public charge, or, at their option, make a cash payment. It was claimed that, as the object of the provision was not taxation but protection against pauperism, it was valid as within the police power. But the court held otherwise. And to the same effect are *Chy Lung* v. *Freeman*, 92 U. S. 275; *Inman Steamship Co.* v. *Tinker*, 94 U. S. 238; *Cook* v. *Pennsylvania*, 97 U. S. 566; and *Transportation Co.* v. *Parkersburg*, 107 U. S. 691.

In the *Matter of Jacobs*, 98 N. Y. 98, a statute provided that the manufacture of tobacco in any form on any floor in a tenement house was prohibited, if any part of such floor was occupied by any persons as a residence, and violation thereof was declared a misdemeanor. The act was entitled, "An act to improve the public health by prohibiting the manufacture of tobacco in any form in tenement houses in certain cases." It was contended that this violated the constitutional provision that no person shall be deprived of his property without due process of law. In answer to this it was claimed that the law was an exercise of the police power. The court held that the declaration contained in the statute was not conclusive upon the subject.

See to the same effect *Almy* v. *California*, 24 How. 169; *Bank Tax Case*, 2 Wall. 200; *Cummings* v. *Missouri*, 4 Wall. 277, 325; *Crandall* v. *Nevada*, 6 Wall. 35; *State Freight Tax*, 15 Wall. 232; *Railroad Co.* v. *Husen*, 95 U. S. 465; *Telegraph Co.* v. *Texas*, 105 U. S. 460; *Moran* v. *New Orleans*, 112 U. S. 69; *Kentucky Railroad Tax Cases*, 115 U. S. 321, 337; *Pullman Southern Car Co.* v. *Nolan*, 22 Fed. Rep. 276, 281; *People* v. *Allen*, 42 N. Y. 404, 413; *Matter of Deansville Cemetery Association*, 66 N. Y. 569. Clearly, therefore, the declaration by the legislature that this is a tax on franchise or business is not controlling.

The statute has not the effect of imposing a tax upon franchise or business. The modes in which the franchises of a corporation may be taxed are clearly defined. It may be done by imposing a fixed sum, or "a graduated contribution

Digitized by Google

proportioned either to the value of the privileges granted, or to the extent of their exercise, or to the results of such exercise." *State Tax on Railway Gross Receipts*, 15 Wall. 284; *Delaware Railroad Tax*, 18 Wall. 206, 231. These provisions of the act do not impose a fixed sum. Nor do they impose a contribution proportioned to the extent of the exercise of the franchise — to the amount of business done. That species of tax is imposed by § 5 of the same act. But these provisions do not refer to the amount of the business in any way. Is this, then, "a contribution proportioned to the value or results of the privileges granted"?

The franchise is "the right to use the tangible property in a special manner for the purposes of gain." *State Railroad Tax Cases*, 92 U. S. 575. It is itself a part of the property of the corporation but quite distinct and separate from its tangible property. *Gordon* v. *Appeal Tax Court*, 3 How. 133, 150; *Wilmington Railroad* v. *Reid*, 13 Wall. 264, 265. It is a thing "capable of appraisal and ascertainable by evidence, and is frequently made the subject of taxation by the sovereign power. It is a right separate and distinct from the capital and moneyed assets of a corporation, and as to the value of which they furnish no evidence." *Conaughty* v. *Saratoga Bank*, 92 N. Y. 401. See to the same effect *Veazie Bank* v. *Fenno*, 8 Wall. 533, 541, 547; *Monroe Savings Bank* v. *Rochester*, 37 N. Y. 365, 367; *Porter* v. *Rockford &c. Railroad Co.*, 76 Ill. 561, 578. Its value is readily ascertained. It is determined by subtracting from the total actual value of the capital stock the total value of all items of property other than franchise. The remainder is, of course, the value of the franchise. This method has the approval of this court. *State Railroad Tax Cases*, 92 U. S. 575, 602–607. It is approved elsewhere as well. *Spring Valley Works* v. *Schottler*, 62 Cal. 69, 117; *Burke* v. *Badlam*, 57 Cal. 594; *San José Company* v. *January*, 57 Cal. 614. Here neither the value of this part of the property of the corporation nor the results of its use are in any way ascertained.

It is claimed that this is a tax upon the franchise or its results upon the ground that the tax is measured by the profits

Digitized by Google

resulting from the use of the franchise — by the capacity of the company to declare dividends. This is clearly erroneous. The tax is a percentage upon that part of defendant's income which it has distributed in dividends — its net income or profits — without discrimination as to the source thereof. This, of course, is a tax upon the property from which the income arises. *Bank of Kentucky* v. *Commonwealth*, 9 Bush, 46; *Opinions of Justices*, 53 N. H. 634; *People* v. *Commissioners of Taxes*, 90 N. Y. 63; *Weston* v. *Charleston*, 2 Pet. 449, 472, 475, 478. But the franchise is only one part of defendant's property. It is only in part the source of the dividends or net profits. They are the product of all the property. Indeed, from the franchise without the other property no dividends or profits could possibly be made. This tax upon the entire amount of such dividends or profits is, therefore, a tax upon the value or result of the franchise only to the same extent and in the same manner that it is a tax upon the value or result of every other item of defendant's property including its United States bonds. And, as it includes property not taxable, it cannot be sustained as a tax on the franchise. *Santa Clara County* v. *Southern Pacific Railroad*, 118 U. S. 394.

But the State claims that this court is already committed to the view that this is a tax upon franchise. And the court below placed its decision chiefly upon this ground. The cases relied upon are: *Society for Savings* v. *Coite*, 6 Wall. 594; *Provident Institution* v. *Massachusetts*, 6 Wall. 611; and *Hamilton Co.* v. *Massachusetts*, 6 Wall. 632.

These cases were decided upon two grounds. (1) It was held that a tax consisting of a percentage upon the deposits made with a savings bank, is a tax upon its franchise or business, and not a tax upon the property in which such deposits may be invested after they are received. (2) It was held, further, that the decision of the State court, although criticised in one of the cases as "founded in unsubstantial distinctions," was binding upon this court. Whatever may be thought of the soundness of this, (see *Louisville and Nashville Railroad* v. *Palmes*, 109 U. S. 244,) it has no present application; for it is not sought to sustain the pres-

Digitized by Google

ent tax by any decision of the courts of the State construing the statute by which it is imposed.

The former ground, it has been claimed, controls the present case. Clearly this cannot be so. The question now involved is entirely different. There the tax was a percentage upon the deposits, "simply the sums received, wholly irrespective of the disposition made of the same." 6 Wall. 627. The liability arose by reason of the receipt of the deposit. It was quite immaterial what became of the money after it was received. That and that alone was selected by the legislature for taxation at a percentage of the amount received. The statute contemplated or related to nothing occurring thereafter. These were the considerations which led the court to hold that the tax was laid upon the franchise or business of receiving money on deposit — upon "the extent to which they, (the banks,) had exercised the privileges granted by their charters." 6 Wall. 632.

In the present case the tax is not measured by the moneys received by defendant — by the volume of its business, the extent to which it has exercised its franchise; but it is a percentage compounded of two factors, the capital and the dividends. That is to say, it is measured by defendant's permanent investment in the business and the net profits realized from its entire property. Until profits are acquired there can be no tax. The tax is measured solely by their amount. Clearly, the ultimate burden rests upon the property of defendant invested in part in United States securities. That, therefore, is the subject of the tax. *State Freight Tax Case*, 15 Wall. 232.

The decision that even a tax consisting of a percentage upon all sums received by a savings bank was a tax upon franchise, was arrived at by a majority of the court, and in the face of emphatic dissent by three of the judges. That decision, therefore, should not be regarded as expressing the views of the court, save in cases identical in their facts. Much less can it be regarded as committing the court to the view that a tax upon the defendant which is a percentage upon its capital and surplus earnings distributed as dividends,

Digitized by Google

is a tax upon corporate franchise. On the contrary, the court repeated in those cases the rule laid down in the Bank Tax Case that "a tax levied under a law of the state" enacting that corporations shall "be liable to taxation on a valuation equal to the amount of their capital and their surplus earnings (is) a tax on the property of the corporation." 6 Wall. 629. These authorities, therefore, are wholly without present application. Neither upon principle nor authority has the statute the effect of imposing a tax upon franchise or business.

This is, in fact, a tax upon capital at its actual value, and therefore does not apply to that part of defendant's capital invested in United States bonds. It is clear from an examination of the statutes that the place where the capital is employed — not the place where the franchises are granted — controls the amount of the tax.

Unless the tax is on capital, the statute must have most incongruous and unequal effects. For the purposes of the tax, corporations are of three classes: (1) those which have paid less than six per cent. dividends; (2) those which have paid six per cent.; and (3) those which have paid more than six per cent. In the case of corporations paying less than six per cent. the act provides that there shall be a tax upon the "actual value" of their capital. It is settled that a tax in that form is a tax upon the property, in which the capital is invested, and that corporations upon which it is imposed are entitled to deduct their United States bonds from the amount of the assessment. *Bank of Commerce* v. *New York*, 2 Black, 620; *Bank Tax Case*, 2 Wall. 200. But if the tax upon corporations paying six per cent. or more be a franchise tax, such corporations will not be entitled to the deduction for their United States bonds to which those paying less than six per cent. are entitled. Still further, where a corporation has paid less than six per cent. upon its common stock and that amount or more upon its preferred stock, it will be entitled to exemption as to its common stock for the amount of its capital invested in United States bonds, but not as to its preferred stock, although all its capital may be so invested.

Digitized by Google

If, on the other hand, the tax be a tax upon capital, the statute leads to no such incongruous and unequal results. The graduated tax results in a rule which works uniformly in all cases. Each corporation is taxed as nearly as may be on the actual value of its capital stock, both common and preferred.

The court below meets this argument by saying that the legislature has power to impose unequal taxes. This may be so. But the same court had already laid down the rule that in matters of taxation "it is a sacred duty to impose the burdens equally, and to enforce the maxim of law and ethics that equality is equity." *People* v. *Commissioners of Taxes*, 76 N. Y. 64, 71. "Equality of taxation is a fundamental principle of our government which no legislation, in the absence of the most explicit provisions, will be presumed to have intended to violate." *People* v. *Supervisors of New York*, 20 Barb. 81, 88, *S. C.* affirmed, 16 N. Y. 424. That, doubtless, is the principle of construction to be followed here. The court will, if possible, construe the statute so as to impose its burden justly and equally. Especially should this be so when the opposite construction is sought solely for the purpose of imposing a burden upon property which this court has uniformly held to be exempt from taxation by the States.

The statute itself admits of no construction other than that which will produce this result. The tax is a percentage upon the capital. The amount of this percentage varies. But the subject-matter taxed remains the same. The rate of tax increases or diminishes with the rate of dividend. There is no method of determining, with absolute exactness, the actual value of the capital stock of a corporation during any considerable period. But no surer standard can be suggested than its results during that period — the dividends which it has earned. *Oswego Starch Factory* v. *Dolloway*, 21 N. Y. 449; *Commonwealth* v. *Cleveland &c. Railroad*, 29 Penn. St. 370; *Lehigh Crane Iron Co.* v. *Commonwealth*, 55 Penn. St. 448. A tax varying in proportion to the dividends must vary in proportion to the actual value of the capital stock. The provisions of this statute have been judicially construed in accord-

Digitized by Google

ance with these views. They were copied literally from a statute of Pennsylvania, Laws of 1879, p. 114, § 4, and have long existed there in the same substantial form: Laws of 1844, p. 498, § 33; 1859, p. 529; 1868, p. 109, § 4. It is well settled there that they impose a tax upon the property of the corporation, *Westchester Co.* v. *County of Chester*, 30 Penn. St. 232; *Lackawanna Co.* v. *Luzerne County*, 42 Penn. St. 424, 430; *Phœnix Iron Co.* v. *Commonwealth*, 59 *Penn. St.* 104; *Commonwealth* v. *Pittsburg, Fort Wayne &c. Railroad*, 74 Penn. St. 83; *Catawissa Co.'s Appeal*, 78 Penn. St. 59; *Coatesville Gas Co.* v. *County of Chester*, 97 Penn. St. 476, 481; and that the dividend of profit earned by the stock is but a means of ascertaining its value. *Lehigh Co.* v. *Commonwealth*, 55 Penn. St. 448, 451; *Commonwealth* v. *Standard Oil Co.*, 101 Penn. St. 119. The Pennsylvania statute was before this court in *Gloucester Ferry Co.* v. *Pennsylvania*, 114 U. S. 196, and was then regarded as imposing "a tax upon the capital" of corporations affected. The act comes precisely within the rules laid down above in *Bank of Commerce* v. *New York*, 2 Black, 620, and the *Bank Tax Case*, 2 Wall. 200. Indeed, the tax in the latter case possessed in a much greater degree than the present, the character of a tax upon franchise. For there the tax was upon the amount of the stock. Even if, by reason of losses, the capital had possessed little or no value, it would equally have been taxable. But here, as has been shown, the tax depends entirely upon the actual value.

If, however, defendant be taxable upon the basis of its entire capital, including the bonds, the tax is repugnant to the Fourteenth Amendment of the Constitution of the United States.

It is provided by the Fourteenth Amendment that no "State shall deprive any person of life, liberty or property without due process of law, nor deny to any person within its jurisdiction the equal protection of the laws." And the defendant is a person within the meaning of this provision. *County of Santa Clara* v. *Southern Pacific Railroad*, 118 U. S. 394; *County of San Mateo* v. *Southern Pacific Railroad*, 13 Fed. Rep. 722, 747, 748, 762.

Digitized by Google

Inequality of taxation is such a denial of equal protection. This was ruled in *Strauder* v. *West Virginia*, 100 U. S. 303; *Exchange Bank* v. *Hines*, 3 Ohio St. 1; *People* v. *Weaver*, 100 U. S. 539; *Bank Tax Case*, 2 Wall. 200.

It is suggested that the legislature has power to classify corporations for purposes of taxation. No doubt it may divide them into as many classes as the different pursuits followed by them may require. *Railroad Tax Cases*, 92 U. S. 575. But there can be no classification by arbitrary rules among those engaged in the same business, in the same locality. There can be no subdivisions merely according to wealth or prosperity. This does not satisfy the requirement of uniformity. These rules are well established. See *Gilman* v. *Sheboygan*, 2 Black, 510; *Albany City Bank* v. *Maher*, 9 Fed. Rep. 884; *County of Santa Clara* v. *Southern Pacific Railroad*, 18 Fed. Rep. 385, 396, 409, 439; *Dundee Co.* v. *School District*, 19 Fed. Rep. 359; *Oliver* v. *Washington Mills*, 11 Allen, 268; *Stuart* v. *Palmer*, 74 N. Y. 183, 189; *State* v. *Readington Township*, 36 N. J. L. 66, 70; *Lexington* v. *McQuillan*, 9 Dana, 513; *S. C.* 35 Am. Dec. 159; *Howell* v. *Bristol*, 8 Bush, 493, 498; *Attorney General* v. *Winnebago Co.*, 11 Wis. 34, 42; *New Orleans* v. *Home Ins. Co.*, 23 La. Ann. 449; *In re Ah Fong*, 3 Sawyer, 144, 145; *Ah Kow* v. *Nunan*, 5 Sawyer, 552; *Parrott's Case*, 6 Sawyer, 349; *Louisville & Nashville Railroad* v. *Railroad Commissioners*, 19 Fed. Rep. 679.

Upon principle the rule in regard to uniformity of taxation upon franchises must be the same as in regard to taxes upon any other property. There can be no more reason why arbitrary distinctions should be made between persons owning that species of property than between the owners of property of any other kind. And it is so held. *County of San Mateo* v. *Southern Pacific Railroad*, 8 Sawyer, 238; *Portland Bank* v. *Apthorp*, 12 Mass. 252, 258; *Commonwealth* v. *People's Savings Bank*, 5 Allen, 428, 431; *Oliver* v. *Washington Mills*, 11 Allen, 268; *Orleans Parish* v. *Cochran*, 20 La. Ann. 373; *Louisiana* v. *Merchants' Ins. Co.*, 12 La. Ann. 802; *East St. Louis* v. *Wehrung*, 46 Ill. 392.

If, then, the tax upon this defendant be a tax upon fran-

Digitized by Google

chise, the statute is unconstitutional. It denies to defendant equal protection of the laws.

If this tax be upheld, the exemption from State taxation of United States bonds in the hands of corporations, is practically gone. Adopting the form of this statute and calling the tax a tax upon franchise or business, any State may impose a tax to be computed upon the capital at whatsoever rate it sees fit. For "it must always be remembered that, if the right to impose a tax at all exists, it is a right which in its nature acknowledges no limits." *Bank of Commerce* v. *New York*, 2 Black, 620. And such tax must be paid, although all the capital be invested in United States bonds. Surely this court will not suffer the great principle of public policy that the States have no power, by "taxation or otherwise, to retard, impede, burden or in any manner control the operations of the national government—" *McCulloch* v. *Maryland*, 4 Wheat. 316, 436; *Lane County* v. *Oregon*, 7 Wall. 71, 77,—to be thus lightly frittered away.

Mr. Denis O'Brien, Attorney General of New York, for defendant in error.

I. The tax imposed upon the plaintiff in error was a tax upon its franchises and not upon its property or capital stock. Prior to the passage of the Acts of 1880 and 1881, corporations were assessed and taxed in New York upon their capital stock. It was the intention of the legislature by these acts to formulate a new and distinct scheme of taxation for all the corporate, associate, or joint stock bodies included within the terms of its provisions.

The law of 1881, on which this question arises, recognizes the clear distinction which must be made in a legislative scheme of taxation where United States securities are owned by the corporation taxed. The law distinctly states that the plaintiff in error shall pay a tax as a tax upon its corporate franchise or business, into the treasury of the State annually, and then provides the method of computation.

Franchises are special privileges conferred by government upon individuals; no franchise can be held which is not

Digitized by Google

derived from a law of the State. *Bank of Augusta* v. *Earle*, 13 Pet. 519, 595.

The State may impose taxes upon the corporation as an entity existing under its laws, as well as upon the capital stock of the corporation, or its separate corporate property; and the manner in which its value shall be assessed, and the rate of taxation, however arbitrary or capricious, are mere matters of legislative discretion. *The Delaware Railroad Tax*, 18 Wall. 206. Nothing can be more certain in legal decision than that the privileges and franchises of a private corporation . . . may be taxed by a State for the support of the State government. Authority to that effect resides in the State independent of the Federal government. *Society for Savings* v. *Coite*, 6 Wall. 594; *State Railroad Tax Cases*, 92 U. S. 575.

The tax in question is a franchise tax because it is immaterial as to the value of the property of the corporation, and because it is immaterial as to the value of its capital stock. The amount of the tax does not depend upon the whole tax to be raised in the State; the assessment is made on the value of the franchise conferred, and is measured by the dividend paying power. The capital stock is simply used as a basis for computation.

The plaintiff in error is a domestic corporation; it exists by the laws of the State of New York; its residence is therein; there is the *situs* of its capital stock and franchises. It cannot be seriously contended that the State may not tax it in some form. It has chosen this method, and its action is final. This tax, therefore, being a tax upon the franchise of the plaintiff, it matters not how its capital stock or property may be invested, whether in United States securities or otherwise. *People* v. *The Commissioners*, 4 Wall. 244; *National Bank* v. *Commonwealth*, 9 Wall. 353; *Van Allen* v. *The Assessors*, 3 Wall. 573.

But we are not without the decision of this court upon this question. A savings bank invested part of its deposits in securities of the United States, declared by Congress to be exempt from taxation by State authority. The State of Con-

Digitized by Google

necticut required savings societies to pay three quarters of one per cent. on the total amount of deposits on a given day. It was held that such tax was on the franchise and not on property; that it was valid; that the society was not exempt from taxation to the extent of the deposits so invested. *Society for Savings* v. *Coite*, 6 Wall. 594.

Under a similiar statute a savings bank in Massachusetts, which had part of its deposits invested in Federal securities, was held liable to a tax on account of such deposits. *Provident Institution* v. *Massachusetts*, 6 Wall. 611. A statute of Massachusetts required corporations having a capital stock to pay a tax of a certain percentage upon the excess of the market value of all such stock over the value of its real estate and machinery. The Hamilton County Manufacturing Company showed that the cash market value of its capital stock did not exceed by more than $263,997 the value of its real estate and machinery, provided that the amount of securities of the United States was not included. The State taxed the whole amount of excess, including the amount of Federal securities. It was held that the tax was upon the franchise of the company and was lawful. *Hamilton Co.* v. *Massachusetts*, 6 Wall. 632.

The Bank Tax Case of New York expressly distinguishes between a property and a franchise tax. *Bank Tax Case*, 2 Wall. 200.

II. The tax in question being upon the franchises of the plaintiff in error, the first section of the Fourteenth Amendment to the United States Constitution has no application. There is nothing in this case showing an unequal exaction. It is true that in one sense one corporation may pay more than another, but in a comparative sense the exaction is equal — in proportion to their earning capacity and the value of their franchises they are taxed. Even were it not so, a franchise tax is not within the rule of uniformity. *Ducat* v. *Chicago*, 10 Wall. 410. This contention is based almost entirely upon a recent decision rendered in the case of *County of San Mateo* v. *Southern Pacific Railroad*, 13 Fed. Rep. 722. The county of San Mateo brought an action against the

Digitized by Google

Southern Pacific Railroad Company to recover State and county taxes assessed upon the property of the company upon which there was a mortgage. By the laws of California whenever an individual holds property incumbered with a mortgage, he is assessed at its value, after deducting from it the amount of the mortgage. If a railroad company holds property subject to a mortgage, it is assessed at its full value, without any deduction for the mortgage. The railroad company refused to pay said taxes upon several grounds, one of which was that there was a discrimination made, palpable and gross, between the taxation of the property of the individual and that of the corporation, and that thereby the corporation was denied the equal protection of the laws guaranteed by the Fourteenth Amendment to the Federal Constitution.

The court held: (1) That private corporations are persons within the meaning of the first section of the Fourteenth Amendment. (2) That as such persons, they are entitled, so far as their *property* is concerned, to the equal protection of the laws. (3) That this equal protection forbids unequal exactions of any kind, and among them that of unequal taxation. These are the main points affecting the case under consideration.

It is respectfully insisted that the broad scope given to the first section of the Fourteenth Amendment, by this decision, is not sustainable on principle or reason; that it was intended simply and solely to prevent discrimination against the negroes. In the *Slaughterhouse Cases*, 16 Wall. 36, 81, this court says: "In the light of the history of these amendments, and the pervading purpose of them which we have already discussed, it is not difficult to give a meaning to this clause. The existence of laws in the States where newly emancipated negroes resided, which discriminated with gross injustice and hardships against them as a class, was the evil to be remedied by this clause, and by it such laws are forbidden. . . . We doubt very much whether any action of a State, not directed by way of discrimination against the negroes as a class, or on account of their race, will ever be held to come within the purview of this provision."

Digitized by Google

But conceding, for the sake of argument, that the adoption of the Fourteenth Amendment has restricted the States in the exercise of the taxing power, that decision in no way affects the power of the State to classify the property within its jurisdiction for the purpose of taxation. The statutes of New York simply aggregate certain corporations into one class of taxpayers, and impose upon them a tax which is uniform as to the whole class. It is sufficient that the tax imposed be uniform and equal as to the class upon which it operates. *State Railroad Tax Cases*, 92 U. S. 575, 611.

A State law for the valuation of property and the assessment of taxes thereon, which provides for the classification of property, subject to its provisions, into different classes, which makes for one class one set of provisions as to modes and methods of ascertaining the value and as to right of appeal, and different provisions for another class as to those subjects, but which provides for the impartial application of the same means and methods to all the constituents of each class, so that the law shall operate equally and uniformly on all persons in similar circumstances, denies to no person affected by it "equal protection of the laws," within the meaning of the Fourteenth Amendment to the Constitution. *Kentucky Railroad Tax Cases*, 115 U. S. 321.

But the San Mateo case is a direct authority for the imposition of the tax in this case. There the tax was one on *property* — here one on the *franchises*. "Taxation on *business* in the form of *licenses* may vary according to the calling or occupation licensed, and the extent of business transacted." 13 Fed. Rep. 737. The distinction is well pointed out by Mr. Justice Clifford, in his opinion in *Provident Institution* v. *Massachusetts*, 6 Wall. 611, 631. "Franchise taxes are levied directly by an act of the legislature, and the corporations are required to pay the amount into the State treasury. They differ from property taxes, as levied for state and municipal purposes, in the basis prescribed for computing the amount, in the manner of assessment and in the mode of collection." The California decision, therefore, does not apply to this case.

Digitized by Google

MR. CHIEF JUSTICE WAITE announced that the judgment of the Supreme Court of the State of New York was

Affirmed by a Divided Court.

SHIPMAN *v.* DISTRICT OF COLUMBIA.

DISTRICT OF COLUMBIA *v.* SHIPMAN.

APPEALS FROM THE COURT OF CLAIMS.

Argued November 3, 1886. — Decided November 15, 1886.

Shipman did a large amount of work for the District of Columbia under a contract, and was paid for it according to its terms. He sued the District in the Court of Claims, in equity, alleging a mistake in the contract, asking to have it reformed, and claiming to recover a large sum. The District answered and filed large counterclaims for alleged overpayments. The Court of Claims refused to reform the contract, but gave judgment for Shipman in the sum of $652.11, being the balance on the adjustment of such claims and counterclaims as were allowed by the court. See 18 C. Cl. 291. Both parties appealed. On the facts found in the record, this court affirms the judgment of the Court of Claims.

Mr. W. Willougby for Shipman.

Mr. Solicitor General for the District of Columbia.

MR. CHIEF JUSTICE WAITE delivered the opinion of the court.

The judgment in this case is affirmed. No disputed questions of law are involved, and our views of the facts are so well expressed in the carefully prepared opinion of the Court of Claims found in *Shipman* v. *District of Columbia*, 18 C. Cl. 291, that we deem it unnecessary to do more than to refer to that opinion for the reasons of our decision. See Appendix.

Affirmed.

Digitized by Google

MINNEAPOLIS AND ST. LOUIS RAILWAY v. COLUMBUS ROLLING MILL.

ERROR TO THE CIRCUIT COURT OF THE UNITED STATES FOR THE SOUTHERN DISTRICT OF OHIO.

Argued November 12, 1886. — Decided November 29, 1886.

A reply to an offer of sale, purporting to accept it on terms varying from those offered, is a rejection of the offer and leaves it no longer open.

On December 8, A offered to sell to B 2000 to 5000 tons of iron rails on certain terms specified, adding that if the offer was accepted A would expect to be notified prior to December 20. On December 16, B replied, directing A to enter an order for 1200 tons, "as per your favor of the 8th." On December 18, A declined to fulfil B's order. *Held*, that the negotiation between the parties was closed, and that an acceptance by B on December 19 of the original offer did not bind A.

The submission of a question of law to the jury is no ground of exception if they decide it aright.

This was an action by a railroad corporation established at Minneapolis in the State of Minnesota against a manufacturing corporation established at Columbus in the State of Ohio. The petition alleged that on December 19, 1879, the parties made a contract by which the plaintiff agreed to buy of tho defendant, and the defendant sold to the plaintiff, two thousand tons of iron rails of the weight of fifty pounds per yard, at the price of fifty four dollars per ton gross, to be delivered free on board cars at the defendant's rolling mill in the month of March, 1880, and to be paid for by the plaintiff in cash when so delivered. The answer denied the making of the contract. It was admitted at the trial that the following letters and telegrams were sent at their dates, and were received in due course, by the parties, through their agents:

December 5, 1879. Letter from plaintiff to defendant: "Please quote me prices for 500 to 3000 tons 50 lb. steel rails, and for 2000 to 5000 tons 50 lb. iron rails, March 1880 delivery."

December 8, 1879. Letter from defendant to plaintiff: "Your favor of the 5th inst. at hand. We do not make steel rails. For iron rails, we will sell 2000 to 5000 tons of 50 lb.

Digitized by Google

rails for fifty-four ($54.00) dollars per gross ton for spot cash, F. O. B. cars at our mill, March delivery, subject as follows: In case of strike among our workmen, destruction of or serious damage to our works by fire or the elements, or any causes of delay beyond our control, we shall not be held accountable in damages. If our offer is accepted, shall expect to be notified of same prior to Dec. 20th, 1879."

December 16, 1879. Telegram from plaintiff to defendant: "Please enter our order for twelve hundred tons rails, March delivery, as per your favor of the eighth. Please reply."

December 16, 1879. Letter from plaintiff to defendant: "Yours of the 8th came duly to hand. I telegraphed you to-day to enter our order for twelve hundred (1200) tons 50 lb. iron rails for next March delivery, at fifty-four dollars ($54.00) F. O. B. cars at your mill. Please send contract. Also please send me templet of your 50 lb. rail. Do you make splices? If so, give me prices for splices for this lot of iron."

December 18, 1879. Telegram from defendant to plaintiff, received same day: "We cannot book your order at present at that price."

December 19, 1879. Telegram from plaintiff to defendant: "Please enter an order for two thousand tons rails, as per your letter of the sixth. Please forward written contract. Reply." [The word "sixth" was admitted to be a mistake for "eighth."]

December 22, 1879. Telegram from plaintiff to defendant: "Did you enter my order for two thousand tons rails, as per my telegram of December nineteenth? Answer."

After repeated similar inquiries by the plaintiff, the defendant, on January 19, 1880, denied the existence of any contract between the parties.

The jury returned a verdict for the defendant, under instructions which need not be particularly stated; and the plaintiff alleged exceptions, and sued out this writ of error.

Mr Eppa Hunton for plaintiff in error. *Mr. C. N. Olds* and *Mr. L. J. Critchfield* filed a brief for same.

Mr. Richard A. Harrison, for defendant in error, submitted on his brief.

Digitized by Google

Opinion of the Court.

MR. JUSTICE GRAY, after making the foregoing statement of the case, delivered the opinion of the court.

The rules of law which govern this case are well settled. As no contract is complete without the mutual assent of the parties, an offer to sell imposes no obligation until it is accepted according to its terms. So long as the offer has been neither accepted nor rejected, the negotiation remains open, and imposes no obligation upon either party; the one may decline to accept, or the other may withdraw his offer; and either rejection or withdrawal leaves the matter as if no offer had ever been made. A proposal to accept, or an acceptance, upon terms varying from those offered, is a rejection of the offer, and puts an end to the negotiation, unless the party who made the original offer renews it, or assents to the modification suggested. The other party, having once rejected the offer, cannot afterwards revive it by tendering an acceptance of it. *Eliason* v. *Henshaw*, 4 Wheat. 225; *Carr* v. *Duval*, 14 Pet. 77; *National Bank* v. *Hall*, 101 U. S. 43, 50; *Hyde* v. *Wrench*, 3 Beavan, 334; *Fox* v. *Turner*, 1 Bradwell, 153. If the offer does not limit the time for its acceptance, it must be accepted within a reasonable time. If it does, it may, at any time within the limit and so long as it remains open, be accepted or rejected by the party to whom, or be withdrawn by the party by whom, it was made. *Boston & Maine Railroad* v. *Bartlett*, 3 Cush. 224; *Dickinson* v. *Dodds*, 2 Ch. D. 463.

The defendant, by the letter of December 8, offered to sell to the plaintiff two thousand to five thousand tons of iron rails on certain terms specified, and added that if the offer was accepted the defendant would expect to be notified prior to December 20. This offer, while it remained open, without having been rejected by the plaintiff or revoked by the defendant, would authorize the plaintiff to take at his election any number of tons not less than two thousand nor more than five thousand, on the terms specified. The offer, while unrevoked, might be accepted or rejected by the plaintiff at any time before December 20. Instead of accepting the offer made, the plaintiff, on December 16, by telegram and letter, referring to

Digitized by Google

the defendant's letter of December 8, directed the defendant to enter an order for twelve hundred tons on the same terms. The mention, in both telegram and letter, of the date and the terms of the defendant's original offer, shows that the plaintiff's order was not an independent proposal, but an answer to the defendant's offer, a qualified acceptance of that offer, varying the number of tons, and therefore in law a rejection of the offer. On December 18, the defendant by telegram declined to fulfil the plaintiff's order. The negotiation between the parties was thus closed, and the plaintiff could not afterwards fall back on the defendant's original offer. The plaintiff's attempt to do so, by the telegram of December 19, was therefore ineffectual and created no rights against the defendant.

Such being the legal effect of what passed in writing between the parties, it is unnecessary to consider whether, upon a fair interpretation of the instructions of the court, the question whether the plaintiff's telegram and letter of December 16 constituted a rejection of the defendant's offer of December 8 was ruled in favor of the defendant as matter of law, or was submitted to the jury as a question of fact. The submission of a question of law to the jury is no ground of exception if they decide it aright. *Pence* v. *Langdon*, 99 U. S. 578.

Judgment affirmed.

FRENCH *v.* HALL.

ERROR TO THE CIRCUIT COURT OF THE UNITED STATES FOR THE DISTRICT OF COLORADO.

Submitted November 8, 1886. — Decided November 29, 1886.

An attorney at law, prosecuting or defending in a civil action, is a competent witness on behalf of his client at the trial of the action.

When it is within the discretion of the court whether to admit evidence in rebuttal which might have been offered in chief, the party offering it is entitled to the exercise of the discretion at the time of the offer.

Digitized by Google

Opinion of the Court.

This was an action at law to recover for services claimed to have been rendered by plaintiff in error to defendant in error. Judgment for defendant, to review which this writ of error was sued out. The case is stated in the opinion of the court.

Mr. Amos Steck and *Mr. M. B. Carpenter* for plaintiff in error.

Mr. Edward O. Wolcott for defendant in error.

Mr. Justice Matthews delivered the opinion of the court.

The plaintiff in error, who was plaintiff below, a citizen of Massachusetts, brought his action at law in the Circuit Court of the United States for the District of Colorado, against the defendant in error, to recover for the value of services alleged to have been performed by him for the defendant, as a broker, in reference to the sale of certain mining property in which the defendant was interested. There was a general denial by the answer of the defendant, and the cause was submitted to a jury upon the issue joined. The record shows that on the first trial there was a verdict in favor of the plaintiff for $5000, which, on a motion for a new trial, was set aside on payment of costs. Thereupon, at a subsequent term, the cause came on again for trial by jury, and there was a verdict for the defendant, and judgment rendered thereon, to reverse which is the object of the present writ of error.

It appears from the bill of exceptions taken on the second trial that the plaintiff, to maintain the issue on his part, gave evidence tending to prove that the defendant, Hall, promised to pay him $5000 for his services in assisting the defendant to make sale of certain mining property in which he was interested. The defendant, to maintain the issue on his part, gave evidence tending to prove that he never promised to pay the plaintiff any sum whatever. The defendant, while on the stand as a witness, on cross-examination, testified that he never told any one that he promised to pay the plaintiff the sum of $5000, and further testified that he never told the attorney of the plaintiff, Mason B. Carpenter, that he promised to pay the

Digitized by Google

plaintiff the sum of $5000. The plaintiff in rebuttal offered as a witness the said attorney, Mason B. Carpenter, who was the sole attorney of plaintiff in conducting the trial of said cause, and who offered to testify that the defendant, Hall, had told him, the said Carpenter, that at a certain time and place he, the defendant, promised to pay the plaintiff, French, the sum of $5000.

The court refused to allow the said Carpenter to be sworn as a witness for the plaintiff because he was acting as an attorney for the plaintiff in conducting the trial of the cause, to which ruling the counsel for the plaintiff excepted.

It further appears from the bill of exceptions that afterwards, upon a motion for a new trial, the court said that the said Carpenter was in fact competent to testify as a witness for the plaintiff, but that his testimony was not offered at the proper time; that the testimony of the witness Carpenter was receivable only in chief and upon the plaintiff's opening, and not in rebuttal; and that this being the second trial of the cause, the plaintiff was not surprised by the testimony of the defendant, Hall, and it was his duty to give in chief and in his opening all evidence as to admissions by the defendant as well as other matters. For this reason the motion for a new trial was denied.

The question for consideration is, whether the court erred in its ruling in not permitting the examination of the plaintiff's attorney as a witness on the plaintiff's behalf. It appears from the bill of exceptions that no objection was made to the examination of the witness by the defendant; the refusal to allow him to be sworn seems to have emanated from the court *sua sponte*, on the ground that he was acting as an attorney for the plaintiff in conducting the trial of the cause. There is nothing in the policy of the law, as there is no positive enactment, which hinders the attorney of a party prosecuting or defending in a civil action from testifying at the call of his client. In some cases it may be unseemly, especially if counsel is in a position to comment on his own testimony, and the practice, therefore, may very properly be discouraged; but there are cases, also, in which it may be quite important, if

Digitized by Google

not necessary, that the testimony should be admitted to prevent injustice or to redress wrong. Such seems, also, to have been the more deliberate opinion of the Circuit Court in this case, as it appears from the bill of exceptions that the refusal to grant a new trial for the alleged error in its ruling was justified, not on the ground that the witness was incompetent, but that his testimony was not offered at the proper time, being receivable only in chief upon the plaintiff's opening, and not in rebuttal.

This reason might have applied if the object of the testimony had been merely to prove an admission on the part of the defendant, and the offer had been rejected on that ground at the time, although it would be a strict application of the rule to require the plaintiff to assume in advance that the defendant would deny as a witness the truth of the plaintiff's case. But aside from that, the testimony seems to have been competent in rebuttal as proof of a contradictory statement made by the defendant at another time and place, with a view to discrediting him as a witness. However that may be, and admitting that the testimony offered was strictly competent only in chief, nevertheless it was a matter of discretion with the court at the time of the trial whether the testimony should be admitted when offered after the defendant had testified. The plaintiff was entitled to the exercise of that discretion on the part of the court at that time, which in the present case he was deprived of by the ruling of the court rejecting the offer of the testimony on another and an illegal ground. We are of the opinion that the court erred to the prejudice of the plaintiff in this respect. The judgment of the Circuit Court is therefore

Reversed, and the cause remanded, with directions to grant a new trial.

Digitized by Google

HANRICK *v.* PATRICK.

BRANCH *v.* PATRICK.

ERROR TO THE CIRCUIT COURT OF THE UNITED STATES FOR THE NORTHERN DISTRICT OF TEXAS.

Argued October 28, 29, 1886. — Decided November 29, 1886.

When the statutes of the state in which an action at law in a Federal court is tried permit a third party to intervene *pro interesse suo*, as in equity, and on the trial a general verdict is rendered and a general judgment entered against both the intervenor and the losing party, the intervenor is not a necessary party to the writ of error to this court, if his interest is clearly separable and distinct.

Following the decisions of the Supreme Court of Texas, and also agreeing with them, this court holds that § 9 of the Act of the Legislature of Texas, of March 18, 1848, so far as it conferred upon aliens a defeasible estate by inheritance from a citizen, notwithstanding the alienage, is not repealed by § 4 of the Act of February 13, 1854; and that immediately after the passage of the British Naturalization Act of 1870, defeasible titles of British alien heirs to land in Texas became indefeasible.

The grantor in a deed and all the subscribing witnesses being residents in a foreign country, proof of its execution by proof of the handwriting of the subscribing witnesses *held* sufficient.

An unnoted erasure in a deed changing the name of the grantee from Elizabeth to Eliza may be explained by proof that Elizabeth and Eliza are identical and the same person.

The general rule in Texas that property purchased during the marriage, whether the conveyance be to husband or wife, is *prima facie* community property holds only where the purchase is made with community funds; and the presumption may be rebutted by proof that the purchase was intended for the wife.

When a deed of land in Texas is made to a married woman for a nominal consideration, the presumption is that it was intended to vest the title in her as separate property.

The power of attorney through which intervenors claim considered.

A covenant of general warranty in a deed of "all the right, title, and interest" of the grantor in the premises described does not estop him from asserting a subsequently acquired title thereto.

This was an action of trespass to try the title to real estate in Texas. There was also a motion to dismiss for want of jurisdiction. The case is stated in the opinion of the court.

Digitized by Google

Mr. W. Hallett Phillips and *Mr. L. W. Goodrich* for Hanrick, plaintiff in error, cited, — on the motion to dismiss: *Williams* v. *Bank*, 11 Wheat. 414; *Owings* v. *Kincannon*, 7 Pet. 399; *Masterson* v. *Herndon*, 10 Wall. 416; *Hampton* v. *Rouse*, 13 Wall. 187; *Simpson* v. *Greeley*, 20 Wall. 152 — and on the merits: *Orr* v. *Hodgson*, 4 Wheat. 453; *McKinney* v. *Saviego*, 18 How. 235, 239; *Hadden* v. *Collector*, 5 Wall. 107, 111; *United States* v. *Tynen*, 11 Wall. 88; *Daviess* v. *Fairbairn*, 3 How. 636; *State* v. *Stoll*, 17 Wall. 425; *Cook County Bank* v. *United States*, 107 U. S. 445; Sirey, under Art. 11; Aubry & Rau, Cours de Droit Civil; Proudhon, c. 9, § 2, c. 11, § 1; Merlin, Art. *Etranger*, § 1, Nos. 7 & 8; Duranton, 1, pp. 159, 160; Dalloz, Jurisprudence Generale. *Sullivan* v. *Burnett*, 105 U. S. 334; *Fairfax* v. *Hunter*, 7 Cranch, 603; *Blight* v. *Rochester*, 7 Wheat. 535; *Gibson* v. *Lyon*, 115 U. S. 439; *East Alabama Railway* v. *Doe*, 114 U. S. 340; *Harrison* v. *Boring*, 44 Texas, 255; *Smith* v. *Sheely*, 12 Wall. 358; *Comstock* v. *Smith*, 13 Pick. 116; *S. C.* 23 Am. Dec. 670; *Washington* v. *Ogden*, 1 Black, 450; *Miller* v. *Fletcher*, 27 Gratt. 403; *East Line Railroad* v. *Garrett*, 52 Texas, 133; *Rainey* v. *Chambuns*, 56 Texas, 17; *Jones* v. *McMasters*, 20 How. 8; *Lott* v. *Kaiser*, 61 Texas, 665; *Rogan* v. *Williams*, 63 Texas, 123; *Kirk* v. *Navigation Co.*, 49 Texas, 213; *Cooke* v. *Bremond*, 27 Texas, 457; *Veramendi* v. *Hutchins*, 48 Texas, 531; *Cryer* v. *Andrews*, 11 Texas, 170; *Barclay* v. *Cameron*, 25 Texas, 232; *Hardy* v. *De Leon*, 5 Texas, 211; *Osterman* v. *Baldwin*, 6 Wall. 116; *Hauenstein* v. *Lynham*, 100 U. S. 483; *Bryan* v. *Sundbury*, 5 Texas, 418; *State* v. *International Railroad*, 57 Texas, 539; *Crane* v. *Reeder*, 21 Mich. 24; *Jackson* v. *Fitzsimmons*, 10 Wend. 9; *S. C.* 24 Am. Dec. 198; *Venable* v. *Beauchamp*, 3 Dana, 321; *S. C.* 28 Am. Dec. 74.

Mr. M. F. Morris, for Sargent, plaintiff in error, cited — on the motion to dismiss: *Cox* v. *United States*, 6 Pet. 172; *Germain* v. *Mason*, 12 Wall. 259; *Masterson* v. *Herndon*, 10 Wall. 416; *Simpson* v. *Greely*, 20 Wall. 152; *O'Dowd* v. *Russell*, 14 Wall. 402; *Feibelman* v. *Packard*, 108 U. S. 14; *Hurt* v. *Hollingsworth*, 100 U. S. 100; *Noonan* v. *Lee*, 2 Black, 499;

Digitized by Google

Bein v. *Heath*, 12 How. 168; *Boyle* v. *Zacharie*, 6 Pet. 648—and on the merits: *Hanrick* v. *Hanrick*, 54 Texas, 101; *Hanrick* v. *Hanrick*, 61 Texas, 596; *Van Rensselaer* v. *Kearney*, 11 How. 297; *Harrison* v. *Boring*, 44 Texas, 255; *Richardson* v. *Traver*, 112 U. S. 423; *Hitz* v. *Nat. Met. Bank*, 111 U. S. 722; *Cooke* v. *Bremond*, 27 Texas, 457; *Rogan* v. *Williams*, 63 Texas, 123.

Mr. J. T. Brady for defendants in error, (*Mr. H. F. Ring* was with him on the brief,) cited—on the motion to dismiss: 20 How. 280; *Simpson* v. *Greely*, 20 Wall. 152; *Masterson* v. *Herndon*, 10 Wall. 416; *Burleson* v. *Henderson*, 4 Texas, 49; *O'Dowd* v. *Russell*, 14 Wall. 402; *Hampton* v. *Rouse*, 13 Wall. 187; *Williams* v. *Bank*, 11 Wheat. 414; *Wilson* v. *Ins. Co.*, 12 Pet. 140—and on the merits: *Alexander* v. *Gillian*, 39 Texas, 227; *Riley* v. *Jameson*, 3 N. H. 23; *S. C.* 14 Am. Dec. 325; *Hanrick* v. *Hanrick*, 54 Texas, 101; *Hanrick* v. *Hanrick*, 61 Texas, 596; *Hanrick* v. *Hanrick*, 63 Texas, 618; *Pilcher* v. *Kirk*, 55 Texas, 208; *Waring* v. *Crow*, 11 Cal. 366; *Dufont* v. *Wetheman*, 10 Cal. 354; *Holton* v. *Smith*, 7 N. H. 446; *Van Rensselaer* v. *Kearney*, 11 How. 297; *Gilmer* v. *Poindexter*, 10 How. 257; *Bryant* v. *Virginia Coal Co.*, 93 U. S. 326; *Ganier* v. *Cotton*, 49 Texas, 101; *Cordia* v. *Cage*, 44 Texas, 532; *Smith* v. *Strahan*, 16 Texas, 314; *S. C.* 67 Am. Dec. 622; *Dunham* v. *Chatham*, 21 Texas, 231; *S. C.* 73 Am. Dec. 228; *Baker* v. *Baker*, 55 Texas, 577.

Mr. H. N. Low also filed a brief for defendants in error in support of the motion to dismiss, citing the following cases not cited by *Mr. Brady*: *Owings* v. *Kincannon*, 7 Pet. 399; *Todd* v. *Daniel*, 16 Pet. 521; *Forgay* v. *Conrad*, 6 How. 201.

Mr. Justice Matthews delivered the opinion of the court.

Eliza M. O'Brien, since deceased, with Philip O'Brien, her husband, and William Brady, citizens of New York, commenced their action in the Circuit Court of the United States for the Northern District of Texas, against Edward G. Hanrick, a citizen of Texas. It was an action of trespass to try the title to

Digitized by Google

real estate in the county of Falls, in that State, described generally as three tracts, one known as the Antanacio de La Serda eleven league grant; the second as two parcels granted to Pedro Zarza; and the third a part of the eleven league tract granted to Rafael d'Aguire. The common source of title as between these parties was Edward Hanrick, who died in 1865 in Montgomery County, Alabama, intestate and without issue, never having married. The plaintiffs below claim title as follows: Edward Hanrick left surviving him as his next of kin and only heirs at the time of his death, one sister, Elizabeth O'Brien, two brothers, named respectively John and James Hanrick, and one nephew, Edward G. Hanrick, the defendant, he being the son and only child of Philip Hanrick, who died in 1852, and who was another brother of Edward Hanrick. Elizabeth O'Brien resided in the county of Wexford, Ireland, and is, and always was, an alien to the United States, and a subject of Great Britain. John Hanrick died intestate and without issue, never having married, in the year 1870, in the county of Wexford, Ireland, an alien to the United States, and a subject of Great Britain. The said James Hanrick left surviving him as his next of kin and only heirs, four daughters, named respectively Elizabeth Clare, Catherine O'Neill, Annie, otherwise called Honora, and Ellen Hanrick, and four grandchildren, the children of a deceased daughter, named respectively Mary, Elizabeth, Bridget, and Robert Whelan, and one son, Nicholas Hanrick. These descendants of James Hanrick reside in Ireland, except Nicholas, Annie, otherwise called Honora, and Ellen Hanrick, who reside in the State of New York. By virtue of these facts, and of the laws of Texas and Great Britain, as hereafter shown, it was claimed that Eliza O'Brien in 1878 was seized and possessed of an undivided one third interest in the said estate of Edward Hanrick in the said lands, when it was claimed she conveyed to the plaintiff, Eliza M. O'Brien, her daughter-in-law, for her separate use and benefit, all her interest in the said estate and lands; William Brady, the other plaintiff below, being entitled to one half of the said undivided one third, by virtue of a conveyance from Eliza M. O'Brien and her husband, Philip O'Brien.

Digitized by Google

The defendant in possession, having pleaded not guilty of the trespass complained of, asserted title in himself as the sole heir at law of the said Edward Hanrick, deceased, on the ground that he was the only descendant having inheritable blood, according to the laws of Texas.

The suit was begun February 13, 1880, and issue was finally joined on amended pleadings by the filing of an answer by Edward G. Hanrick on April 3, 1883. On the next day, Wharton Branch appeared as an intervenor in the cause, and filed a pleading called an original answer, in which he denies the sufficiency in law of the plaintiff's petition; objects that on its face it is shown that necessary parties have not been joined as plaintiffs; denies all the allegations of the petition; pleads not guilty to the trespasses alleged therein; and then sets up title in himself to an undivided one fourth of three fourths of the estate under a conveyance alleged to have been made to him on the 14th of February, 1878, by Philip O'Brien, as attorney in fact, acting under a power of attorney alleged to have been made on the 16th of May, 1870, by Elizabeth O'Brien and James and John Hanrick. It is alleged that by that power of attorney Philip O'Brien was authorized and empowered to sell and convey their interests in said estate, and in pursuance of which he made the deed under which the intervenor claims title. The consideration of that deed is stated to have been money theretofore paid out, and expenses incurred and legal advice and information furnished and rendered by the defendant to the said Philip O'Brien. The pleading concludes by praying judgment for the defendant against all parties to the suit, establishing his right, title, and interest in the estate; and that the same be set apart to him in severalty; and for costs and general relief.

On the same day John B. Sargent also appeared as intervenor, and filed an original answer on his behalf, similar in form to that of Wharton Branch, and claiming title to an undivided one half of the interest of Elizabeth O'Brien and John and James Hanrick, under a deed made to him conveying that interest on the 14th of February, 1878, by Philip O'Brien, acting as their attorney in fact under the same power

Digitized by Google

of attorney referred to in the answer of Wharton Branch; and concluding with a prayer for a similar judgment in his own behalf.

Thereupon the plaintiffs in the action filed pleadings styled an answer to the petition for leave to intervene, and plaintiffs' first supplemental petition, in which they asked that the leave to intervene on behalf of Branch and Sargent be denied and their petitions struck from the files; and specifically setting out the grounds on which they claimed that the alleged conveyances made by Philip O'Brien, as attorney in fact, to them respectively, should be held to be null and void. Amongst those grounds were the following: First. Prior to the execution of the deeds under which the intervenors claim title, two of the principals in the power of attorney, James and John Hanrick, had died, thereby revoking the authority. Second. That the execution of the said deeds on the part of said Philip O'Brien had been obtained by the said Branch and the said Sargent by fraudulent representations, and that the same had never in fact been delivered. The plaintiffs' supplemental petition concludes with a prayer that they have and recover of the said Wharton Branch and the said John B. Sargent, as well as the said Edward G. Hanrick, an undivided one third interest in the lands described in their original complaint, and for all other relief, general and special.

The defendant, Edward G. Hanrick, after the filing of these interventions, moved to dismiss the cause, on the ground, among others, that he had no interest in the controversy as between the plaintiffs on the one hand and Branch and Sargent on the other; but all objections to the intervention were overruled or disregarded, and the cause proceeded to trial on the issues as made between the plaintiffs and the defendant, Edward G. Hanrick, and also on those as between the plaintiffs and the said Branch and Sargent. The cause having been submitted to the jury on the 10th of April, 1883, a verdict was returned as follows: "We, the jury, find for the plaintiff;" and thereupon judgment was entered on the verdict as follows: "It is, therefore, ordered and adjudged by the court that the plaintiffs, Eliza M. O'Brien and Philip O'Brien and William

Digitized by Google

Brady, have and recover of the defendant, Edward G. Hanrick, and of the intervenors, Wharton Branch and John B. Sargent, an undivided one third interest in and to the following-described lands: . . . And it is further ordered that a writ of possession in favor of said plaintiffs issue therefor; and that plaintiffs do have and recover of such intervenors such costs by them incurred by reason of such intervention, and of defendant all costs which were incurred herein, not including any costs incurred by the said intervention, for which let execution respectively issue."

To reverse this judgment, the defendant, Edward G. Hanrick, sued out a writ of error on April 16, 1883, which was docketed in this court on the 16th of August of the same year. To reverse the judgment as against them, the intervenors, Wharton Branch and John B. Sargent, sued out their writ of error separately on September 26, 1884, which was docketed in this court on the 24th of November of the same year. The intervention of Branch and Sargent was permitted in compliance with Article 4788 of the Revised Statutes of Texas, of 1879, which provides that "when a party is sued for lands, the *real owner* or warrantor may make himself, or may be made, a party defendant in the suit, and shall be entitled to make such defence as if he had been the original defendant in the action."

Article 1188 prescribes that "the pleadings of an intervenor shall conform to the requirements of pleadings, on the part of the plaintiff and defendant respectively, so far as they may be applicable."

The defendants in error, the administrator of Eliza M. O'Brien, Philip O'Brien, and William Brady, now move to dismiss the writ of error sued out by Hanrick on the ground that the judgment was jointly against him and the intervenors, Branch and Sargent, and that all should have joined in the same writ. The same objection, of course, applies to the writ of error sued out severally by the intervenors, Branch and Sargent. This motion presents the first question for consideration.

We assume, without so deciding, that the proceedings on the

Digitized by Google

part of the intervenors may be justified under the statutes of Texas. It must also be admitted to be a general rule, well established by the practice and in the decisions of this court, that, when a judgment against defendants is joint, all the parties affected thereby must join in the writ of error, or there must be a summons and severance, or its equivalent. The question here, however, is, whether this judgment, although so in form, is joint in law as against the original defendant and the intervenors. The verdict in favor of the plaintiffs against them, although single, was rendered upon different and altogether distinct issues. The intervenors defended as against the plaintiffs, not on behalf of the original defendant, but altogether in their own interest, claiming title, not only against the plaintiffs, but adverse to that of the defendant. Indeed, the intervenors' title was derived through the plaintiffs, and their claim was under them, and, as between them and the original defendant, their interest was altogether with the plaintiffs and against the defendant. The ground of their right of recovery against the defendant was the very title asserted by the plaintiffs, and their claim could be successfully prosecuted only by establishing the right of the plaintiffs to recover. Their right against the defendant was to recover against him if the plaintiffs recovered, and their right against the plaintiffs was to recover against the defendant only in the event that the plaintiffs first succeeded in recovering against him. The situation as to them is anomalous. The litigation was triangular. The judgment must be regarded as joint only in form, but severable in fact and in law. It is to be read as if it were based upon a finding that the plaintiffs recover as against the defendant for the title asserted against him, and against the intervenors in respect to the title asserted by them against the plaintiffs. The judgment for costs is in fact separated, the costs of the intervention being regarded as costs in a separate suit. In fact there were two suits, one interjected in the other, in which the parties are different, the titles are different, the interests are different, and there could be no joint judgment in both except in mere words. None of the cases cited in support of the motion to dismiss are applicable

Digitized by Google

here, because they refer to judgments in common law actions where no such anomaly as is presented in this record could occur. In equity, where interventions *pro interesse suo* have been permitted to those affected by the proceeding, but not parties to the original controversy, or where the original parties have distinct and separable interests, the same general rule as to appeals applies to joint decrees; but it has always been held that, where the decree is final and separate or separable, those not affected by it are not necessary parties to the appeal. *Forgay* v. *Conrad*, 6 How. 201.

The same principle must govern judgments at law rendered in actions according to the forms of procedure prescribed by the statutes of the States in which they are tried where interventions such as the present are permitted, and the same rule must be adopted in reference to them.

The motions to dismiss are, therefore, denied.

The principal question in the original action arises upon the defence that the plaintiffs below were aliens at the time of descent cast by the death of Edward Hanrick, in 1865, and, under the laws of Texas, therefore not capable of acquiring title by inheritance; it being claimed that the defendant, Edward G. Hanrick, a citizen of Texas, was the sole heir at law.

The Constitution of the Republic of Texas — continued in that of the State — contained the following provision, § 10, General Provisions: "No alien shall hold land in Texas, except by titles emanating directly from the Government of this Republic. But if any citizen of this Republic shall die intestate or otherwise, his children or heirs shall inherit his estate, and aliens shall have a reasonable time to take possession of and dispose of the same, in a manner hereafter to be pointed out by law."

In pursuance of this provision, an act defining what a reasonable time should be was passed on January 28, 1840, Hartley's Digest, Art. 585, and reënacted March 18, 1848, Paschal's Digest, Art. 44, in § 9 of an act entitled "An Act to regulate the descent and distribution of intestates' estates," as follows: "Section 9. In making title to land by descent, it shall be no bar to a party that any ancestor through whom he derives

Digitized by Google

his descent from the intestate is or hath been an alien; and every alien to whom any land may be devised or may descend shall have nine years to become a citizen of the Republic, and take possession of such land, or shall have nine years to sell the same, before it shall be declared to be forfeited, or before it shall escheat to the government."

An act was passed February 13, 1854, Laws Texas, 1853–4, 98, entitled "An Act to define the civil rights of aliens," which is as follows:

"SECTION 1. Be it enacted, etc., that any alien, being a free white person, shall have and enjoy in the State of Texas such rights as are or shall be accorded to American citizens by the laws of the nation to which such alien shall belong, or by treaties of such nation with the United States.

"SEC. 2. That aliens may take and hold any property, real or personal, in this State by devise or descent from any alien or citizen in the same manner in which citizens of the United States may take and hold real or personal estate by devise or descent within the country of such alien.

"SEC. 3. That any alien, being a free white person, who shall become a resident of this State, and shall, in conformity with the naturalization laws of the United States, have declared his intention to become a citizen of the United States, shall have the right to acquire and hold real estate in this State, in the same manner as if he was a citizen of the United States.

"SEC. 4. That the ninth section of an act entitled 'An Act to regulate the descent and distribution of intestates' estates,' approved March eighteenth, eighteen hundred and forty-eight, is hereby repealed so far as the same may be inconsistent with this act; and this act shall take effect and be in force from and after its passage."

This act was in force in 1865, when Edward Hanrick died. At that time the common law was in force in England whereby, as was held by this court in *Orr* v. *Hodgson*, 4 Wheat. 453, an alien might take an estate by the act of the parties, as by purchase, but could not take by the act of the law, as by descent, for want of inheritable blood. "Where a person dies leaving issue who are aliens, the latter are not deemed his

Digitized by Google

heirs at law, for they have no inheritable blood, and the estate descends to the next of kin who have inheritable blood, in the same manner as if no such alien issue were in existence."

But on the 12th of May, 1870, the British Parliament passed an act entitled "An Act to amend the law relating to the legal condition of aliens and British subjects," styled the Naturalization Act of 1870. By § 2 it prescribed the status of aliens in the United Kingdom as follows: "Real and personal property of every description may be taken, acquired, held, and disposed of by an alien in the same manner in all respects as by a natural-born British subject, and a title to real and personal property of every description may be derived through, from, or in succession to an alien in the same manner in all respects as through, from, or in succession to a natural-born British subject: *Provided*, (1) that this section shall not confer any right on an alien to hold real property situate out of the United Kingdom, and shall not qualify an alien for any office or for any municipal, parliamentary, or other franchise: (2) that this section shall not entitle an alien to any right or privilege as a British subject, except such rights and privileges in respect of property as are hereby expressly given to him: (3) that this section shall not affect any estate or interest in real or personal property to which any person has or may become entitled, either mediately or immediately, in possession or expectancy, in pursuance of any disposition made before the passing of this Act, or in pursuance of any devolution by law on the death of any person dying before the passing of this Act."

It is conceded that if Edward Hanrick, the ancestor, had died after the enactment of this British statute, the plaintiffs below would have been entitled under the Texas statute of 1854 to claim as his heirs at law their proportion and interest in his real estate. It is contended, however, on the part of the defendant, that inasmuch as at the time of the descent cast in 1865 there was no such British statute as that contemplated by the Texas act of 1854, the plaintiffs were under such a disability of alienage at that time that they were cut off from the inheritance, which, becoming at that instant

Digitized by Google

vested by law in the defendant, Edward G. Hanrick, the subsequent passage of the British statute could not be permitted by any retroactive effect to divest that interest in favor of the plaintiffs. On the other hand, it is contended by the plaintiffs that under the ninth section of the act of March 18, 1848, which they claim was still in force in 1865, Elizabeth O'Brien, as sister of Edward Hanrick, although an alien, was entitled as his heir at law to a defeasible estate as such, which she was entitled to make indefeasible within nine years after descent cast by becoming a citizen of the State and taking possession of the land, with the right to sell the same in the alternative before it should be declared to be forfeited, or before it should escheat to the government, and which subsequently became indefeasible by the operation of the act of 1854, in consequence of the passage of the British statute of 1870.

This contention on the part of the plaintiffs below is met again by the defendant with the proposition that § 9 of the act of March 18, 1848, was repealed by § 4 of the act of February 13, 1854.

This very question, in another litigation involving the same title, came up directly for adjudication in the Supreme Court of Texas in the case of *Hanrick* v. *Hanrick*, 54 Texas, 101. The following is an extract from the opinion of the court in that case. "The statute of 1854 is an affirmative one, and by long established rules of construction must be considered as additional to the then existing § 9, act of 1848, upon the same subject-matter, and that the latter is not repealed by it, unless this is done in express terms or by necessary implication. Potter's Dwarris on Statutes, 189; 1 Bishop Crim. Law, 1st ed., par. 175, 194. [4th ed. §§ 175, 194.] The statute of 1854 does not in express terms repeal § 9, act of 1848, for it is affirmatively provided that it is repealed so far as inconsistent with the act of 1854, thus clearly evincing the legislative intent that the latter act would be the rule only in certain cases. Neither, it is believed, was this § 9 repealed by the statute of 1854 by implication under old and well established rules of construction governing such cases." pp. 108, 109.

The court then proceeds to point out from the history of

Digitized by Google

the legislation of Texas on the subject the policy of the State, and adds as follows: "In pursuance of this policy, and to meet in a proper spirit the modern liberal international legislation upon the subject of alienage, the act of 1854 was passed, not it is believed in a spirit of retaliation and to withdraw from citizens of those countries which may not have passed such reciprocal laws as contemplated by that act, the benefits of our previous legislation, but simply to make our legislation conform in the particular case with that of those countries which may also have legislated upon the subject. The act of 1854 did not in terms limit the rights of aliens generally which previously had been granted by § 9, act of 1848, by restricting them to such rights, *and those only*, as were or might be granted to citizens of the United States by their government. On the contrary, it was an affirmative and enlarging statute, and intended to give to aliens such rights and privileges, in addition to those granted by § 9, act of 1848, as had been or should be given by their government to citizens of the United States." p. 111.

In conclusion on this point, the court say: "We are of opinion, therefore, that the statute of 1854, neither by its express terms nor by a proper construction of its provisions and intention, did so repeal § 9, act of 1848, as to prevent, if they are otherwise entitled, the alien heirs of Edward Hanrick from deriving title by descent under it to real estate in Texas." p. 112.

The Supreme Court of Texas thereupon proceeded to consider the further question whether, if a title did so descend and vest in such alien heirs, they can, being still aliens and subjects of Great Britain, maintain a suit for the recovery of their interests after nine years have elapsed since descent was cast in 1865. In answer to that question they say: "Notwithstanding the tendency of the earlier decisions of this court to the contrary, under its more recent decisions and those of the Supreme Court of the United States, the effect of the provision of the Constitution of the Republic, and the statutes of 1840 and 1848, upon the subject of alienage, before quoted, was to vest a defeasible title to real estate in Texas into the alien children and heirs of a citizen of the United States who may have died

Digitized by Google

intestate leaving such property; which title was valid both against individuals and also the State, not only for the period of nine years, but for such further time until the State by some proper proceedings in the nature of *office found* had declared a forfeiture. *Sabriego* v. *White*, 30 Texas, 576; *Settegast* v. *Schrimpf*, 35 Texas, 323; *Andrews* v. *Spear*, 48 Texas, 567; *Osterman* v. *Baldwin*, 6 Wall. 116; *Airhart* v. *Massieu*, 98 U. S. 491; *Phillips* v. *Moore*, 100 U. S. 208. No proceeding has been taken in this case to declare the land forfeited. From the date of the death of Edward Hanrick, in 1865, to the passage of the above act of the Parliament of the United Kingdom of Great Britain and Ireland in 1870, nine years have not elapsed. Immediately upon the passage of this act the defeasible title in the alien heirs of Edward Hanrick was, by the provisions of the act of 1854, changed into an indefeasible title; the same vesting into his heirs according to our statute of descent and distribution in force at the time of descent cast."

This decision of the Supreme Court of Texas is directly in point, and was repeated in the case of *Hanrick* v. *Hanrick*, 61 Texas, 596, and also in the case of *Hanrick* v. *Hanrick*, 63 Texas, 618.

In the case of *Airhart* v. *Massieu*, 98 U. S. 491, some of these provisions of the law of Texas in one aspect were carefully reviewed, and it was there said that "the act of January, 1840, declared that, in making title by descent, it should be no bar to a party that any ancestors through whom he derives his descent from the intestate is or hath been an alien. This law would seem to be the legitimate result of the status of aliens with regard to title to lands in Texas; the prohibition to hold lands being provisional only, not operative unless they failed to become citizens or dispose of their land within nine years; and not even then until regular proceedings should be provided for and should be had to annul the title. The later cases in Texas have fully established this doctrine;" referring to the cases of *Sabriego* v. *White*, 30 Texas, 576; *Settegast* v. *Schrimpf*, 35 Texas, 323; and *Andrews* v. *Spear*, 48 Texas, 567.

Great weight, if not conclusive effect, in our opinion, is to be

Digitized by Google

given to these decisions of the Supreme Court of Texas upon the question of the construction of the statutes of the State, as affecting titles to real estate within its territory, and upon the authority of those decisions alone we are quite willing to rest the conclusion that the ninth section of the act of 1848, so far as it conferred upon the plaintiffs below a defeasible estate by inheritance from Edward Hanrick, notwithstanding their alienage, is not repealed by the subsequent provisions of the act of 1854. *Middleton* v. *McGrew*, 23 How. 45. We are, however, also of the opinion that the decisions of the Supreme Court of Texas on that point are well sustained by the reasons on which they proceed. It follows, therefore, that the defence put forward by Edward G. Hanrick, as against the plaintiffs, based on the alienage of Elizabeth O'Brien, cannot be sustained.

We proceed, in the next place, to consider and dispose of certain assignments of error predicated on the rulings of the court as to the admission in evidence and effect of a deed produced by the plaintiffs and read to the jury, dated May 11, 1878, purporting to be signed by Eliza O'Brien, to Eliza M. O'Brien, one of the plaintiffs. This deed appears to have been made between Eliza O'Brien, in the county of Wexford, Ireland, as grantor, and Eliza Mercy O'Brien, the wife of Philip O'Brien, as grantee. It is expressed to be in consideration of the sum of one dollar. It grants all the right, title, and interest of the grantor in and to certain tracts of land therein described, which belonged to Edward Hanrick, deceased, including that in controversy. It professes to have been signed, sealed, and delivered in the presence of two witnesses, of whom one was Francis Ruttledge, a justice of the peace of the county of Wexford, who certifies that Elizabeth O'Brien, personally known to him to be the individual described in, and who executed, the deed, personally came before him and acknowledged its execution. Martin O'Brien, the other subscribing witness, makes an affidavit that he knew Eliza O'Brien, the individual described in the document, and that he was present, and saw her sign, seal, and deliver it as her act and deed, which is certified on the deed by the consul of the United States at Dublin. It also appears from the endorsement on

Digitized by Google

the deed that it has been duly recorded in the various counties in which the land lies.

It is stated in the bill of exceptions that "upon the face of said deed it appeared that wherever the name of the grantor was mentioned in the body of said deed, the name, as originally written, was Elizabeth O'Brien, and that a portion of said name had been scratched or erased so as to read Eliza O'Brien, of which changes no note of explanation or emendation appeared in said deed."

When the deed was offered, the defendant objected to its introduction in evidence for the following reasons: 1st. Because it had been impeached as a forgery by the affidavit of Wharton Branch, one of the intervenors, who filed his affidavit to that effect on the 4th of April, 1883. 2d. Because the deed did not purport to be the deed of Elizabeth O'Brien, nor to vest title in the grantee, Eliza M. O'Brien, to hold as her separate property. 3d. Because of the unexplained changes apparent on the face of the deed. The court overruled the objections, but before the deed was read in evidence to the jury, the plaintiffs offered preliminary proof to the court to prove the execution of the instrument as at common law, and a witness was called and sworn who testified to the court that "the grantor in said deed and the subscribing witnesses all reside in Ireland; that he was acquainted with the handwriting of Francis Ruttledge, one of the subscribing witnesses to said deed, and that he believed the said Francis Ruttledge to have signed the same as subscribing witness thereto." Evidence was also given to the court tending to rebut said statement, and in the further progress of the case before the jury evidence was introduced by the plaintiffs tending to show that Elizabeth O'Brien and Eliza O'Brien were one and the same person. Evidence was also introduced tending to rebut the alleged fact. Plaintiffs then proposed to prove by the deposition of Philip O'Brien that no consideration was paid for said conveyance, and that the same was intended as a gift to his wife, Eliza M. O'Brien. To the admission of this testimony the defendant objected, because the deed, being upon its face a deed for valuable consideration

Digitized by Google

made to a married woman during coverture, was in law a deed to the community, and subject to the sole control and disposition of the husband, and a trust in favor of a separate right could not at law be engrafted upon it by parol testimony. These objections were overruled by the court, and the testimony was admitted.

We are of opinion that these rulings of the court were correct, on the supposition that the plaintiffs were properly put upon proof of the genuineness of the deed, irrespective of the certificate from the record. The proof of execution, by proof of the handwriting of the subscribing witness, was sufficient. The objection founded upon the supposed erasures was fully met by testimony as to the identity between Elizabeth O'Brien and Eliza O'Brien. The only erasure appearing, being a change from one name to the other, was sufficiently explained by the proof of identity. At any rate, the presumption was that the erasure was made before the execution of the deed. *Little* v. *Herndon*, 10 Wall. 26. The consideration of the deed being one dollar was merely nominal. *Hitz* v. *The National Metropolitan Bank*, 111 U. S. 722. And while it appears to be well established law in Texas that property purchased during the marriage, whether the conveyance be to the husband or wife, is *prima facie* community property, *Higgins* v. *Johnson*, 20 Texas, 389, *S. C.* 70 Am. Dec. 394, that rule only holds where the purchase is made with community funds, and this presumption may be rebutted by proof that the purchase was intended for the wife. *Dunham* v. *Chatham*, 21 Texas, 241, 244; *S. C.* 73 Am. Dec. 228. As in this case the consideration was nominal only, and the deed made to the wife, the presumption is that it was intended to vest the title in her as separate property.

The remaining questions, which we deem it important to notice, arise upon the title claimed by the intervenors, Branch and Sargent. They are material also in the controversy between the plaintiff and the original defendant, as the latter was entitled to defeat the plaintiff's recovery by showing an outstanding legal title in any other parties. To sustain this claim of title, the defendant and the intervenors introduced,

Digitized by Google

first, a power of attorney, dated May 16, 1870, purporting to be executed by James Hanrick, John Hanrick, and Elizabeth O'Brien to Philip O'Brien. This power of attorney granted power and authority to Philip O'Brien, on behalf of the other parties, to recover their interest in the estate of Edward Hanrick, and for that purpose to do all such acts, and take such proceedings, and use all such lawful ways and means as he should deem necessary to assert and establish their right. It also contained the following clause: "And also for and on behalf and in the names of us, and as our acts and deed, to make, sign, seal, execute, and deliver all such agreements, contracts, leases, conveyances, and assurances, with all usual and reasonable covenants therein, on our part, of all and any part of said messuages, tenements, premises, estate, and effects, as shall be found necessary or expedient."

Professing to act under this power of attorney, Philip O'Brien executed a deed in the names of his principals, on February 1, 1878, to William Jenkins, Jr., in consideration of one dollar and other valuable considerations, conveying all the right, title, and interest of his principals in the real estate belonging to them as heirs of Edward Hanrick. On the same day, William Jenkins, Jr., the grantee in that deed, conveyed the same interest to Eliza M. O'Brien, the wife of Philip O'Brien. On the same day, Eliza M. O'Brien, wife of Philip O'Brien, in her own right, her husband joining in the conveyance, in consideration of one dollar and other valuable considerations, granted to John B. Sargent, one of the intervenors, "one undivided half of all my right, title, and interest in and to the following described lands, situated in the State of Texas, the said land being the same this day conveyed to me by William Jenkins, Jr." This deed contained covenants that the grantor is "lawfully seized of an interest in fee simple of the granted premises aforesaid; that they are free from all encumbrances by me incurred, and that I have good right to sell and convey the same as aforesaid, and that I will, and my heirs, executors, and administrators shall, warrant and defend the same to the said grantee, and to his heirs and assigns forever, against the lawful claims and demands of all persons."

Digitized by Google

On the 14th of February, 1878, Philip O'Brien, acting for himself and his wife, Eliza M. O'Brien, and for James Hanrick, John Hanrick, and Elizabeth O'Brien, the heirs of Edward Hanrick, deceased, in consideration of one thousand dollars to be paid by John B. Sargent, conveyed to him in fee simple an undivided one half interest in and to all the estate of Edward Hanrick, deceased, to which the grantors were entitled, their interest therein being described as three fourths thereof. This deed contained covenants "that *our said interest* in the property and premises are free and clear of all and every incumbrance, and that we, &c., will warrant and defend the same," &c. A similar deed, on the same date, was made in the name of the same grantors to Wharton Branch, conveying an undivided one fourth interest in and to all the estate of Edward Hanrick, deceased, to which the grantors were entitled. It was also shown that Eliza M. O'Brien, in the years 1877 and 1878, had acquired the title of Nicholas Hanrick, Ellen Hanrick, and Honora Hanrick, children and heirs at law of James Hanrick, a brother of Edward Hanrick. On the 11th of May, 1878, Elizabeth O'Brien, by the name of Eliza O'Brien, executed a deed conveying all her right, title, and interest in the estate of her deceased brother, Edward, to Eliza M. O'Brien, the wife of Philip O'Brien, being the same deed already referred to in a previous part of this opinion. It is conceded that John Hanrick and James Hanrick, brothers of Edward Hanrick, who joined in the power of attorney to Philip O'Brien, dated May 16, 1870, had both died, John Hanrick in 1870, and James Hanrick in 1875, and before Philip O'Brien executed any conveyance of the property as their attorney in fact. As to them and their heirs or assigns, of course, the power of attorney was thereby revoked.

The deed from Philip O'Brien to Branch, dated February 14, 1878, and the deed to Sargent of the same date, were also ineffectual as to Eliza M. O'Brien, his wife, for whom he had no authority to act at all. They were also void as to Elizabeth O'Brien, because the conveyances were not authorized by the power of attorney, even if the latter was not revoked as to her also by the death of her brothers, with whom she had

Digitized by Google

joined in its execution. Equally unwarranted was the deed from Philip O'Brien to Jenkins, dated February 1, 1878, and the conveyance by Jenkins to Eliza O'Brien of the same date. O'Brien's authority under the power of attorney from his principals was to recover their estate for them, and not to give it away. The intervenors, however, rely upon the operation of the covenant of warranty contained in the deeds to John B. Sargent of February 1, 1878, made by Eliza M. O'Brien, in conjunction with her husband, Philip O'Brien, claiming that it operated to convey her title subsequently acquired under the deed from Eliza O'Brien, her mother-in-law, dated May 11, 1878. The covenant of warranty in the deed to Sargent, however, relates only to the premises granted, which the grantors agree to warrant and defend, and the premises granted are described as "one undivided half of all my right, title, and interest in and to the following described lands," and cannot, therefore, operate as an estoppel preventing the grantors from asserting any subsequently acquired title. The conveyance and the covenants are both confined to the right, title, and interest which Eliza M. O'Brien had at the date of the deed, expressly referred to and described in the deed of February 1, 1878, as the interest conveyed by the deed from Jenkins. There is no recital in the deed to estop her as to the character of her title or the quantum of interest intended to be conveyed within the rule laid down by this court in *Van Rensselaer* v. *Kearney*, 11 How. 297. In the absence of such recital, a covenant of general warranty, where the estate granted is the present interest and title of the grantor, does not operate as an estoppel to pass a subsequently acquired title.

The rule on that point seems well stated by Mr. Rawle, Covenants for Title, 4th ed., 393, in the following language: "Where the deed, although containing general covenants for title, does not on its face purport to convey an indefeasible estate, but only the right, title, and interest of the grantor, in cases where those covenants are held not to assure a perfect title, but to be limited and restrained by the estate conveyed, the doctrine of estoppel has been considered not to apply; in other words, although the covenants are as a general rule invested with

Digitized by Google

the highest functions of an estoppel in passing, by mere operation of law, an after acquired estate, yet they will lose that attribute when it appears that the grantor intended to convey no greater estate than he was possessed of." *White* v. *Brocaw*, 14 Ohio St. 339, 343; *Adams* v. *Ross*, 1 Vroom (30 N. J. L.) 505, 509; *Blanchard* v. *Brooks*, 12 Pick. 47; *Brown* v. *Jackson*, 3 Wheat. 449, 452.

In the present case there is no ground for supposing that the parties to the deed had in contemplation anything more than the supposed interest of Eliza M. O'Brien existing at that date as derived under the deed from William Jenkins, Jr., of February 1, 1878. The conclusion is that the covenant of warranty relied upon does not have the effect claimed of enlarging the estate conveyed by including the subsequently acquired title which passed to Eliza M. O'Brien by the deed from Elizabeth O'Brien of May 11, 1878.

This disposes of all questions of substance arising upon the record. We find no error in the proceedings and judgment of the Circuit Court. Its judgment is accordingly

Affirmed.

WASHINGTON COUNTY *v.* SALLINGER.

ERROR TO THE CIRCUIT COURT OF THE UNITED STATES FOR THE EASTERN DISTRICT OF NORTH CAROLINA.

Argued November 10, 1886. — Decided November 29, 1886.

A court-house in North Carolina being destroyed by fire, the county commissioners rented a building on another site, about 200 yards distant from the old site, to be used as a court-house; and after five years' occupancy purchased the building and paid for the same by issuing bonds of the county to the seller. In an action on the bonds against the county; *Held*, that the Act of the Legislature, of North Carolina of 1868, c. 20, relating to the removal of county buildings, does not apply to such a case.

The provisions contained in the proviso in § 5 of the Act of the Legislature of North Carolina, of February 27, 1877, to establish county governments, apply only to commissioners to be chosen thereafter under the provisions of that act.

Digitized by Google

This was an action at law to recover upon bonds issued by the commissioners of Washington County, North Carolina, for the purchase of a court-house. The case is stated in the opinion of the court.

Mr. C. M. Busbee for plaintiff in error.

Mr. Samuel F. Phillips for defendant in error.

MR. JUSTICE MATTHEWS delivered the opinion of the court.

The object of this writ of error is to reverse a judgment rendered against the plaintiff in error on five obligations in writing, for $1000 each, of like tenor, as follows, to wit:

"OFFICE OF THE BOARD OF COMMISSIONERS
"No. 19. OF THE COUNTY OF WASHINGTON, N. C.

"Twelve months after date, with interest from date at the rate of six per centum per annum, the Board of Commissioners of Washington County promise to pay to Louis M. Hornthal, or to his order, one thousand dollars, for value received, and to secure indebtedness contracted for the necessary expenses of said county in the purchase of brick building for court-house.

"This first day of October, 1877.

"J. G. AUSBON, [SEAL.]
"*Chairman of the Board of Commissioners of Washington County.*

"Countersigned:
"W. H. STUBBS,
"*Register of Deeds and Clerk of said Board.*"

The plaintiff below was a purchaser for value before due, and without notice of any defence. His right to recover was denied on the ground that, under the circumstances, the Board of Commissioners of Washington County had no authority of law for making and issuing the obligations sued on.

It appears from the bill of exceptions that the court-house of Washington County was destroyed by fire in the spring of

Digitized by Google

1872; that in the following August the defendants, the County Commissioners, rented the building for the purchase of which the bonds sued on were afterwards issued, which is situated about 200 yards from the court-house which was destroyed by fire, in the town of Plymouth, and, before the succeeding fall term of the Superior Court, gave notice, by public advertisement for thirty days, declaring the house so rented to be the public court-house of Washington County, and that courts were held continuously therein until the commencement of the action.

The defendant offered in evidence a copy of the proceedings, as recorded, of a special meeting of the Board of County Commissioners of Washington County, held on the first Monday in October, 1877, at which the whole number of five were present. The transcript of the proceedings of that meeting sets out a paper addressed to the Board of Commissioners of Washington County, signed by eight justices of the peace, requesting that body, at its next meeting, to contract "for the purchase of the brick store and lot in Plymouth, lately the custom-house, for the use of the county of Washington for a court-house, paying for the same the bonds of the county, bearing six per cent. interest, payable at one, two, three, four and five years, with interest from date, at price of five thousand dollars, or five bonds of one thousand dollars each, at the rate of interest due as aforesaid, as we have here reconsidered.

"Plymouth, N. C., September 24th, 1877."

It was thereupon moved and seconded that a vote of the board be taken on the purchase of the brick building then used as a court-house. Whereupon three votes were cast for said purchase and one vote against it. The record of the proceedings of the meeting then contains the following:

"Whereas the court-house of the county of Washington, with the offices for the preservation of the public records and for the transaction of the public business, were destroyed by fire in the month of May, 1872, and it is absolutely necessary that the county shall own a court-house, with suitable offices wherein the public records may be safely kept, and wherein the officers of the court and the county can conveniently transact

Digitized by Google

the public business, and this board declare that it is inexpedient longer to occupy a rented house for these purposes; and whereas Louis M. Hornthal, of the city of New York, has offered to sell to this Board of Commissioners for said county the water part of lot numbered one hundred and forty nine, situated in the town of Plymouth in said county, so numbered upon the plat or plan of said town, known as the custom-house property, fronting fifty feet upon Water street and extending to the river, including the wharf upon the same, with the brick house forty feet wide, sixty feet long, of three stories in height, with basement or cellar, at the price of five thousand dollars, to be secured by the bonds of the Board of Commissioners, payable in five equal annual instalments, bearing interest at the rate of six per centum per annum, and agree to execute title to the same upon payment of the purchase-money and interest, and to execute to this board a bond, with surety, to perform this agreement; and whereas a majority of the justices of said county have in writing directed this Board of County Commissioners to accept the offer of the said L. M. Hornthal, and to make the purchase of said property upon the terms named:

"It is ordered by this board, a majority of said justices concurring, that James G. Ausbon, chairman of this board, contract with the said L. M. Hornthal, through his agent, L. H. Hornthal, for the purchase of said property; that he take from the said L. M. Hornthal his bond, with surety as above provided, and that he execute, as chairman of this board, five bonds, each for one thousand dollars, payable severally 1st October, 1878, 1879, 1880, 1881, 1882, bearing six per centum interest; that he cause the same to be countersigned by the clerk of this board, who is the register of deeds for this county, and that the seal of his office be attached. (Signed) J. G. Ausbon, Chairman."

The transcript of the record of the proceedings of a special meeting of the Board of County Commissioners, held on the first Monday, November 5, 1877, was also put in evidence, wherein it appeared as follows: J. G. Ausbon, as chairman, reported in writing "that in obedience to the order of this board

Digitized by Google

proposed on the 1st day of October, 1877, he accepted the bond of L. M. Hornthal, of the city of New York, in the penal sum of ten thousand dollars, with justified surety, conditioned to execute title to this Board of County Commissioners for the brick store and lot in Plymouth, known as the custom-house, upon payment of the purchase-money, and that under said order he executed to him five bonds, each for one thousand dollars, dated the 1st day of October, 1877, bearing six per cent. interest from date, payable at one, two, three, four, and five years from date, which were countersigned by the clerk of this board, and sealed with the seal of his office as register of deeds, and that he has caused the said title bond to be proved and registered."

It was thereupon ordered that the report be adopted, and that the action of the chairman in the premises be in all respects confirmed and approved. All the commissioners were present at this meeting.

Upon this state of case, the court directed the jury that the plaintiff was entitled to recover, and there was verdict and judgment accordingly.

It is now contended by the plaintiff in error that the ruling of the court, and the judgment rendered in pursuance thereof, are erroneous on two grounds: First. That by the laws of North Carolina in force at that time, and applicable to the transaction, the commissioners of the county had no power to change the site of the county court-house, unless authorized to do so by a unanimous vote of all the members of the board at their September meeting, and after a notice of the proposed change, specifying the new site, published in a newspaper printed in the county and posted in one or more public places in every township in the county for three months next immediately preceding the annual meeting at which the final vote on the proposed change was to be taken; and upon that point he cites the Laws of North Carolina, 1868, c. 20, § 8, sub-sec. 8; and Battle's Revisal, 1873, c. 27, § 8, sub-sec. 8. Second. That the Board of Commissioners did not have the power to make the contract in question, and the bonds in pursuance and execution of the same, "without the concurrence of a majority

Digitized by Google

of the justices of the peace sitting with them," in pursuance of § 5 of the Laws of North Carolina of 1876–1877, c. 141.

The statute of North Carolina referred to in support of the first assignment of error is the Act of 1868, c. 20. It provides for the organization and government of counties, and enacts that every county is a body politic and corporate, and has the powers specified by statute or necessarily implied in such a body, which can only be exercised by the Board of Commissioners or in pursuance of a resolution adopted by them. Among its general powers enumerated is, "to purchase and hold land within its limits, and for the use of its inhabitants, subject to the supervision of the General Assembly." The Board of Commissioners of each county are required to hold a regular meeting at the court-house on the first Mondays of September and March of each year. They are expressly authorized "to purchase real property necessary for any public county building, and for the support of the poor, and to determine the site thereof where it has not been already located;" also, to locate the necessary county buildings, and to raise, by tax upon the county, the money necessary for their erection. Subdivision 8 of § 8 of the statute is as follows: "To remove or designate a new site for any county building; but the site of any county building already located shall not be changed unless by a unanimous vote of all the members of the board at the regular September meeting, and unless upon notice of the proposed change, specifying the new site. Such notice shall be published in a newspaper printed in the county, if there be one, and posted in one or more public places in every township in the county for three months next immediately preceding the annual meeting at which the final vote on the proposed change is to be taken. Such new site shall not be more than one mile distant from the old, except upon the special approval of the General Assembly."

It is for want of conformity to the directions of this clause that it is contended that the proceedings of the County Commissioners of Washington County in the purchase of the court-house building which constitutes the consideration for the obligations in suit, are illegal. We are of opinion, however, that

Digitized by Google

the provisions of that sub-section do not apply to the circumstances of the present case. The language of the law is limited to the removal or designation of a new site for an existing county building, and cannot be applied to a case such as the present, where the court-house has been destroyed by fire. It was the duty of the commissioners, after the destruction of the existing court-house, to provide a place where the courts could be held and a building suitable for the purpose. The renting of a building in another locality cannot be considered as a removal or designation of a new site for the county building already located. Where a county building has been destroyed by fire, its site cannot be said any longer to exist as a location. A literal adherence, as required by the argument for the plaintiff in error, to the terms of the section in its application to this case leads to a necessary absurdity, for the regular September meeting, at which the unanimous vote of the board must be given, which it is contended is a necessary condition precedent to the validity of the transaction, is required to be held at the court-house, but, according to the circumstances of this case, there was no court-house at which any such meeting could be held. By the terms of the law the County Commissioners have power to designate the site of any county building not already and previously located, and the terms of the sub-section relied on apply, we think, only to the case where it is a naked proposition to abandon one building, then in use for county purposes, and to establish another one in another site for the same purpose.

In the present case, also, if there was any change in the site of the county building, it took place immediately after the destruction by fire of the old one, when the premises subsequently purchased were leased by the commissioners and occupied as a county court-house. This had been done five years previously. In the meantime the occupancy of the place in question as a court-house had been public and notorious, so that, we think, it may be considered at the time when the purchase of the property was made that the site for a county court-house had been already established. The change of title from that of lessee for a term of years to an ownership in fee

Digitized by Google

by reason of the purchase was not a change of the site of a county building. It, therefore, does not come within the prohibition relied on.

As to the second assignment of error, reliance is had upon an act to establish county governments, ratified February 27, 1877. Laws of North Carolina, 1876–1877, c. 141, p. 226. That was a statute which enacted a new mode of governing counties. It provided in § 4 that justices of the peace should be elected by the General Assembly, and the General Assembly, it was provided, at its then present session, should elect three justices of the peace for each township in the several counties of the State, to be divided into three classes, and hold their offices for the terms of two, four, and six years respectively; but the successor of each class, as his term expired, should be elected by the General Assembly for the term of six years. It was also provided that the terms of those elected at the then present session of the General Assembly, should begin at the expiration of the terms for which the justices of the peace then in office had been elected, and not before. Section 5 enacted that justices of the peace for each county, on the first Monday in August, 1878, and on the first Monday in August every two years thereafter, should assemble at the court-house of their respective counties, and, a majority being present, should proceed to the election of not less than three, nor more than five, persons to be chosen from the body of the county, including the justices of the peace, who should be styled the Board of Commissioners for the county, and hold their offices for two years from the date of their qualification, and until their successors should be elected and qualified. Those elected on the first Monday in August, 1878, were to enter upon the duties of their office immediately upon the expiration of the term for which the Board of County Commissioners then in office had been elected, and not before. The same section contained the following proviso: "*Provided, however,* That the Board of Commissioners shall not have power to levy taxes, to purchase real property, to remove or designate new sites for county buildings, to construct or repair bridges, the cost whereof may exceed five hundred dollars, or to borrow

Digitized by Google

money for the county, nor alter or make additional townships, without the concurrence of a majority of the justices of the peace sitting with them; and for the purposes embraced in this proviso the justices of the peace of the county shall meet with the Board of Commissioners on the first Monday in August, one thousand eight hundred and seventy-eight, and annually thereafter, unless oftener convened by the Board of Commissioners, who are hereby empowered to call together the justices of the peace, when necessary, not oftener than once in three months; but for such services the justices of the peace shall receive no compensation."

The next section of the statute provided that the Board of Commissioners so elected should have and exercise the jurisdiction and powers vested in the Board of Commissioners then existing.

It is quite evident, we think, that the proviso to § 5, which is relied upon as prohibiting the exercise of the powers specified, except in conjunction with the justices of the peace sitting with the Board of Commissioners, applies only to those commissioners who should be chosen thereafter under the provisions of that act, the first election under which could not occur prior to the first Monday in August, 1878; and that those then elected could not enter upon the duties of their offices until after the expiration of the term for which the existing Boards of County Commissioners then in office had been elected. The limitations upon the powers of the commissioners under that statute cannot be construed as affecting the powers of the Boards of Commissioners in office at the date of this transaction, which was in the year 1877. The Act of February 27, 1877, therefore, has no application to this case. There is, therefore, no error in the record, and the judgment of the Circuit Court is

Affirmed.

Digitized by Google

FREEMAN v. ALDERSON.

ERROR TO THE CIRCUIT COURT OF THE UNITED STATES FOR THE NORTHERN DISTRICT OF TEXAS.

Argued November 2, 1886. — Decided November 29, 1886.

A personal judgment for costs may not be rendered against the defendant, on default, in an action of trespass to try title to real estate, if citation was served on him by publication, as a non-resident, and not personally; and if such judgment be entered, it cannot be enforced against other property of the defendant within the jurisdiction of the court.

The following was the case as stated by the court.

This was an action of trespass to try the title to certain land in Texas. It is the form in use to recover possession of real property in that State.

The plaintiffs claimed the land under a deed to their grantor, executed by the sheriff of McLennan County, in that State, upon a sale under an execution issued on a judgment in a State court for costs, rendered against one Henry Alderson, then owner of the property, but now deceased.

The defendants asserted title to the land as heirs of Alderson, contending that the judgment, under which the alleged sale was made was void, because it was rendered against him without personal service of citation, or his appearance in the action.

The material facts of the case, as disclosed by the record, are briefly these: On the 16th of July, 1855, a tract of land comprising one third of a league was patented by Texas to Alderson, who had been a soldier in its army. One undivided half of this tract was claimed by D. C. Freeman and G. R. Freeman, and they brought an action against him for their interest. The pleadings in that action are not set forth in the transcript, but from the record of the judgment therein, which was produced, we are informed that the defendant was a non-resident of the State, and that the citation to him was made by publication. There was no personal service upon him, nor did he

Digitized by Google

appear in the action. The judgment, which was rendered on the 1st of October, 1858, was of a threefold character. It first adjudged that the plaintiffs recover one undivided half of the described tract. It then appointed commissioners to partition and divide the tract, and set apart, by metes and bounds, one half thereof, according to quantity and quality, to the plaintiffs; and to make their report at the following term of the court. And, finally, it ordered that the plaintiffs have judgment against the defendant for all costs in the case, but stayed execution until the report of the commissioners should be returned and adopted, and a final decree entered.

At the following term, the commissioners made a report showing that they had divided the tract into two equal parcels. The report was confirmed, and on the 31st of March, 1859, the court adjudged that the title to one of these parcels was divested from Alderson and vested in the plaintiffs, the two Freemans, and that they recover all costs in that behalf against him, which were $61.45, and that execution issue therefor. Execution therefor was issued to the sheriff of McLennan County on the 30th of May, directing him to make the amount out of "the goods, chattels, lands, and tenements" of the defendant. It was levied on the other half of the divided tract, which remained the defendant's property. On the 5th of July, 1859, this half was sold by the sheriff to one James E. Head for $66.79, being the costs mentioned and his fees for the levy and for his deed, which was executed to the purchaser. In September following, Head conveyed the premises to D. C. Freeman, for the alleged consideration of $178. Two of the defendants disclaimed having any interest. The other defendants, including Freeman, so far as their title is disclosed by the transcript, claimed under the sheriff's deed.

On the trial, the defendants, to show title out of the plaintiffs, offered in evidence the judgment for the costs, the execution issued thereon, and the sheriff's deed; to the introduction of which the plaintiffs objected, on the ground that the judgment for costs was a judgment *in personam*, and not *in rem*, and was rendered against the defendant, who was a non-resident of the State, without his appearance in the action or personal

Digitized by Google

service of citation upon him, but upon a citation by publication only, and therefore constituted no basis of title in the purchaser under the execution.

The court sustained the objection and excluded the documents from the jury; and the defendants excepted to the ruling. No other evidence of title being produced by the defendants, a verdict was found for the plaintiffs, and judgment in their favor was entered thereon; to review which the case is brought to this court on a writ of error.

Mr. M. F. Morris for plaintiff in error.

Mr. L. W. Goodrich and *Mr. E. H. Graham* for defendants in error, submitted on their briefs.

Mr. Justice Field, after stating the case, delivered the opinion of the court, as follows:

Actions *in rem*, strictly considered, are proceedings against property alone, treated as responsible for the claims asserted by the libellants or plaintiffs. The property itself is in such actions the defendant, and, except in cases arising during war for its hostile character, its forfeiture or sale is sought for the wrong, in the commission of which it has been the instrument, or for debts or obligations for which by operation of law it is liable. The court acquires jurisdiction over the property in such cases by its seizure, and of the subsequent proceedings by public citation to the world, of which the owner is at liberty to avail himself by appearing as a claimant in the case.

There is, however, a large class of cases which are not strictly actions *in rem*, but are frequently spoken of as actions *quasi in rem*, because, though brought against persons, they only seek to subject certain property of those persons to the discharge of the claims asserted. Such are actions in which property of non-residents is attached and held for the discharge of debts due by them to citizens of the State, and actions for the enforcement of mortgages, and other liens. Indeed, all proceedings having for their sole object the sale or other disposition of the property of the defendant to satisfy the

Digitized by Google

demands of the plaintiff, are in a general way thus designated. But they differ, among other things, from actions which are strictly *in rem*, in that the interest of the defendant is alone sought to be affected, that citation to him is required, and that judgment therein is only conclusive between the parties.

The State has jurisdiction over property within its limits owned by non-residents, and may, therefore, subject it to the payment of demands against them of its own citizens. It is only in virtue of its jurisdiction over the property, as we said on a former occasion, that its tribunals can inquire into the non-resident's obligations to its own citizens; and the inquiry can then proceed only so far as may be necessary for the disposition of the property. If the non-resident possesses no property in the State, there is nothing upon which its tribunals can act. *Pennoyer* v. *Neff*, 95 U. S. 714, 723. They cannot determine the validity of any demand beyond that which is satisfied by the property. For any further adjudication, the defendant must be personally served with citation or voluntarily appear in the action. The laws of the State have no operation outside of its territory, except so far as may be allowed by comity; its tribunals cannot send their citation beyond its limits and require parties there domiciled to respond to proceedings against them; and publication of citation within the State cannot create any greater obligation upon them to appear. *Ib.*, page 727. So, necessarily, such tribunals can have no jurisdiction to pass upon the obligations of non-residents, except to the extent and for the purpose mentioned.

This doctrine is clearly stated in *Cooper* v. *Reynolds*, 10 Wall. 308, where it became necessary to declare the effect of a personal action against an absent party without the jurisdiction of the court, and not served with process or voluntarily appearing in the action, and whose property was attached, and sought to be subjected to the payment of the demand of the resident plaintiff. After stating the general purpose of the action, and the inability to serve process upon the defendant, and the provision of law for attaching his property in such cases, the court, speaking by Mr. Justice Miller, said:

Digitized by Google

"If the defendant appears, the cause becomes mainly a suit *in personam*, with the added incident that the property attached remains liable, under the control of the court, to answer to any demand which may be established against the defendant by the final judgment of the court. But if there is no appearance of the defendant, and no service of process on him, the case becomes in its essential nature a proceeding *in rem*, the only effect of which is to subject the property attached to the payment of the demand which the court may find to be due to the plaintiff. That such is the nature of this proceeding in this latter class of cases is clearly evinced by two well-established propositions: First, the judgment of the court, though in form a personal judgment against the defendant, has no effect beyond the property attached in that suit. No general execution can be issued for any balance unpaid after the attached property is exhausted. No suit can be maintained on such a judgment in the same court, or in any other; nor can it be used as evidence in any other proceeding not affecting the attached property; nor could the costs in that proceeding be collected of defendant out of any other property than that attached in the suit. Second, the court, in such a suit, cannot proceed unless the officer finds some property of defendant on which to levy the writ of attachment. A return that none can be found is the end of the case, and deprives the court of further jurisdiction, though the publication may have been duly made and proven in court." Page 318.

To this statement of the law it may be added, what, indeed, is a conclusion from the doctrine, that whilst the costs of an action may properly be satisfied out of the property attached, or otherwise brought under the control of the court, no personal liability for them can be created against the absent or non-resident defendant; the power of the court being limited, as we have already said, to the disposition of the property, which is alone within its jurisdiction.

The pleadings in the case in which judgment was rendered for costs against Alderson are not before us. We have only the formal judgment, from which it should seem that the action was to recover an undivided interest in the property, and then

Digitized by Google

to obtain a partition of it, and have that interest set apart in severalty to the plaintiffs — a sort of mixed action to try the title of the plaintiffs to the undivided half of the property, and to obtain a partition of that half. Such action, though dealing entirely with the realty, is not an action *in rem* in the strict sense of the term; it is an action against the parties named, and, though the recovery and partition of real estate are sought, that does not change its character as a personal action; the judgment therein binds only the parties in their relation to the property. The service of citation by publication may suffice for the exercise of the jurisdiction of the court over the property so far as to try the right to its possession, and to decree its partition; but it could not authorize the creation of any personal demand against the defendant, even for costs, which could be satisfied out of his other property.

The judgment is for all the costs in the case, and no order is made that they be satisfied out of the property partitioned. Had satisfaction been thus ordered, no execution would have been necessary. The execution, also, is general in its direction, commanding the sheriff to make the costs out of any property of the defendant.

The judgment, as far as the costs are concerned, must, therefore, be treated as a judgment *in personam*, and, for the reason stated, it was without any binding obligation upon the defendant; and the execution issued upon it did not authorize the sale made, and, of course, not the deed of the sheriff. Were the conclusion otherwise, it would follow, as indeed it is claimed here, that a joint owner of real property might sue a non-resident co-tenant for partition, and, having had his own interest set apart to himself, proceed to sell out on execution the interest of his co-tenant for all the costs.

The judgment of the court below must be

Affirmed.

Digitized by Google

WILLAMETTE MANUFACTURING COMPANY v. BANK OF BRITISH COLUMBIA.

APPEAL FROM THE CIRCUIT COURT OF THE UNITED STATES FOR THE DISTRICT OF OREGON.

Argued November 9, 1886. — Decided November 29, 1886.

It is within the power of a legislature which creates a corporation and grants franchises to it, to authorize it to sell those franchises.

A corporation which is authorized to sell its franchises is authorized to mortgage them.

A statute which confers upon a corporation the right to take water from a river and to conduct it through canals, and the exclusive right to the hydraulic powers and privileges created by the water, and the right to use, rent, or sell the same or any portion thereof, authorizes the corporation to mortgage such powers and privileges.

This was a suit to foreclose a mortgage. The case is stated in the opinion of the court.

Mr. George H. Williams for appellant submitted on his brief, citing: *Black* v. *Delaware & Raritan Canal Co.*, 7 C. E. Green (22 N. J. Eq.), 130; *Thomas* v. *Railroad Co.*, 101 U. S. 71; *Memphis &c. Railroad* v. *Berry*, 112 U. S. 609; *Louisville & Nashville Railroad* v. *Palmes*, 109 U. S. 244; *Wilson* v. *Gaines*, 103 U. S. 417; *Morgan* v. *Louisiana*, 93 U. S. 217; *Head* v. *Amoskeag M'fg Co.*, 113 U. S. 9, and cases therein cited; *Cass* v. *Manchester Iron Co.*, 9 Fed. Rep. 640; *Stewart* v. *Jones*, 40 Missouri, 140; *Mahoney* v. *Spring Valley Water Co.*, 52 Cal. 159; *Abbot* v. *American Hard Rubber Co.*, 33 Barb. 578; *McCullough* v. *Moss*, 5 Denio, 567; *Head* v. *Providence Ins. Co.*, 2 Cranch, 127; *Bank of Augusta* v. *Earle*, 13 Pet. 519; *Perrine* v. *Chesapeake & Delaware Railroad*, 9 How. 172; *Pearce* v. *Madison & Indianapolis Railroad*, 21 How. 441; *Barclay* v. *Talman*, 4 Edw. Ch. 123; *Maryland* v. *Bank of Maryland*, 6 G. & J. 205; *Farmers' Bank* v. *Beaston*, 7 G. & J. 421; *S. C.* 28 Am. Dec. 226; *Brinkerhoff* v. *Brown*, 7 Johns Ch. 217.

Digitized by Google

Mr. J. N. Dolph for appellee cited: *Morgan* v. *Louisiana*, 93 U. S. 217; *Sheets* v. *Selden*, 2 Wall. 177; *East Boston Freight Co.* v. *Eastern Railroad*, 13 Allen, 422; *McAllister* v. *Plant*, 54 Mississippi, 106; *Aurora Agricultural Society* v. *Paddock*, 80 Ill. 263; *Curtis* v. *Leavitt*, 15 N. Y. 9; *Thompson* v. *Lambert*, 44 Iowa, 239; *Van Arsdale* v. *Watson*, 65 Ind. 176; *Clark* v. *Farmers' Woolen M'fg Co.*, 15 Wend. 256; *Fay* v. *Noble*, 12 Cush. 1; *Ketchum* v. *Buffalo*, 4 Kernan (14 N. Y.), 356; *Whitewater Canal Co.* v. *Valette*, 21 How. 414, and cases cited there; *Commercial Bank* v. *Newport M'fg Co.*, 1 B. Mon. 13; *S. C.* 35 Am. Dec. 171; *State* v. *Mansfield*, 3 Zabriskie (23 N. J. L.), 510; *S. C.* 57 Am. Dec. 409; *New Orleans, &c., Railroad* v. *Delamore*, 114 U. S. 501; *Ragan* v. *Aiken*, 9 Lea, 609; *Houston & Texas Railroad* v. *Shirley*, 54 Texas, 125; *Miles* v. *Thorne*, 38 Cal. 335; *Randolph* v. *Larned*, 12 C. E. Green (27 N. J. Eq.), 557; *Leppencott* v. *Allander*, 27 Iowa, 460; *Bowman* v. *Wathen*, 2 McLean, 376; *Felton* v. *Deall*, 22 Vt. 170; *S. C.* 54 Am. Dec. 61; *Benson* v. *Mayor*, 10 Barb. 223; *Ladd* v. *Chatard*, 1 Minor (Ala.), 366; *Lewis* v. *Ganesville*, 7 Ala. 85; *Dundy* v. *Chambers*, 23 Ill. 369; *Bank of Middlebury* v. *Edgerton*, 30 Vt. 182; *Billing* v. *Breining*, 45 Mich. 65.

Mr. Justice Miller delivered the opinion of the court.

This is an appeal from the Circuit Court of the United States for the District of Oregon.

The Willamette Woolen Manufacturing Company, the appellant, was incorporated by an act of the territorial legislature of Oregon on the 17th day of December, 1856, which act is in the following language:

"Sec. 1. *Be it enacted by the Legislative Assembly of the Territory of Oregon*, That George H. Williams, Alfred Stanton, Joseph Watt, Joseph Holman, Daniel Waldo, William H. Rector, E. M. Barnum, J. G. Wilson, and J. D. Boon, and their associates, stockholders in the joint stock company known as the 'Willamette Woolen Manufacturing Company,' and their successors, are hereby declared a body corporate and

Digitized by Google

politic by the name and style of the 'Willamette Woolen Manufacturing Company,' for the purpose of creating and improving water powers and privileges and manfacturing; and the present organization of said joint stock company shall continue until changed by said corporation.

"SEC. 2. Said corporation shall have power to purchase, receive, and possess lands, goods, chattels, and effects of every kind, the same to use and dispose of at pleasure; to contract and be contracted with; to sue and be sued; to have a common seal, and the same to use and change at pleasure; and to ordain and establish such by-laws and regulations as it may deem expedient for its own government and the efficient management of its affairs, consistent with the Constitution and laws of the United States and the laws of this Territory.

"SEC. 3. The capital stock of said corporation shall not exceed two hundred thousand dollars, and shall be divided into shares of not less than one hundred dollars each, transferable as its by-laws may provide.

"SEC. 4. Said corporation shall receive, possess, and enjoy all the property, interests, and rights of said joint stock company, and shall hold and have, and may enforce by legal remedies, all claims and obligations due or to become due, given or that may be given to said company; and all stock due or to become due to said company shall be payable to and collected by said corporation; and the individual members of said corporation shall each and singular be liable for the corporate debts of said company, contracted while a member of the same, to the amount of his share of the corporate property.

"SEC. 5. Said corporation shall have power to bring water from the Santiam River to any place or places in or near Salem, to be brought as far as practicable through the channel or the valley of Mill creek; and for such purpose may enter upon lands and also said creek, and do all things proper and suitable for a safe, direct, and economical conveyance of water as aforesaid; but said corporation shall do no unnecessary injury to private property, and shall be answerable in damages to any person whose property is injured by its acts.

"SEC. 6. Said corporation shall have the exclusive right to

Digitized by Google

the hydraulic powers and privileges created by the water which it takes from the Santiam River, and may use, rent, or sell the same, or any portion thereof, as it may deem expedient.

"SEC. 7. This act shall be in force from and after its passage."

The present suit was brought by the Bank of British Columbia against that corporation to foreclose a mortgage executed by it on the 24th day of August, 1875, to secure the payment of promissory notes made by the company, amounting originally to over eighty thousand dollars, of which, at the time of bringing the suit, only about fifteen thousand remained unpaid. To the bill of foreclosure the defendant, in the Circuit Court, filed an answer and a plea. The plea, which raises the only question in issue here, is as follows:

"And for a further defence and plea to said bill of complaint, said defendant, the Willamette Woolen Manufacturing Company, alleges that it is now, and continuously for more than twenty years next last past has been, incorporated under and by virtue of an act of the Legislative Assembly of the Territory of Oregon, passed December 17th, 1856, and entitled 'An Act to incorporate the Willamette Woolen Manufacturing Company.' That the fifth section of said act provides as follows, viz.:

"'SEC. 5. Said corporation shall have power to bring water from the Santiam River to any place or places in or near Salem, to be brought as far as practicable through the channel or the valley of Mill creek; and for such purpose may enter upon lands and also said creek, and do all things proper and suitable for a safe, direct, and economical conveyance of water as aforesaid; but said corporation shall do no unnecessary injury to private property, and shall be answerable in damages to any person whose property is injured by its acts.'

"That the rights and powers enumerated in said section five of said act, and thereby conferred upon defendant, constitute the personal and exclusive franchise of defendant as such corporation, and that said mortgage mentioned in plaintiff's bill of complaint included said franchise, and of right ought by this honorable court to be declared null and void and of no

Digitized by Google

effect so far as the same includes said franchise. That it is necessary to the use, enjoyment, and maintenance of defendant's said franchise that defendant shall have and retain the exclusive use and enjoyment of all the property mentioned and described in plaintiff's mortgage set out in said bill of complaint which relates to the power to bring water from said Santiam River to said Salem."

That court overruled the plea, and decree was rendered for the plaintiff ordering a sale of all the mortgaged property upon failure to pay the sum found due within a reasonable time. Sale was accordingly made by the commissioner appointed for the purpose, and the manufacturing company brought this case here on appeal.

The assignments of error made in this court are as follows:

"The court below erred —

"1st. In holding that the mortgage was valid as to the franchise created by said section five of the act.

"2d. In entering a decree for the sale of said franchise.

"3d. In determining said question in the affirmative.

"4th. In holding that said corporation had power to divest itself of its corporate franchise by mortgage, sale, or otherwise, without the consent of the Legislature of Oregon."

The mortgage commences its granting clause, descriptive of the property conveyed, by saying that the said corporation "doth hereby grant, bargain, sell, assign, transfer, set over, and convey unto the party of the second part" — meaning the the bank — "its assigns, successors, and representatives, all the following real property lying and being situate in the county of Marion, and State of Oregon, more particularly described as follows, to wit:" Then follows a minute description by metes and bounds and courses and distances of the realty upon which the mill property of the party of the first part now stands. "The design hereof being to convey the entire parcel of realty, together with the tenements and buildings, together with all and singular the machinery of every kind used therein or thereabout. Also the power to bring water from the Santiam River to any place or places in or near Salem, the same to be brought as far as practicable through the channels or the val-

Digitized by Google

ley of Mill creek, and for such purposes may enter upon lands, and also said creek, and do all things proper and suitable for a safe and economical conveyance of water, as aforesaid; also the exclusive right to the hydraulic powers and privileges created by the water from the Santiam River; also all the rights and powers of the said party of the first part in and to the water rights, powers, and privileges obtained under its charter or articles of incorporation, including all rights and property of kindred character acquired by said party of the first part in any way or from any person since the incorporation aforesaid. Also all that tract or parcel of realty upon which the party of the first part has now in operation a sash factory" — giving a full description of it — "together with all the rights of way now owned by said party of the first part, as appurtenant to or necessary to the use or enjoyment of said rights, privileges, and easements in the water aforesaid, together with all and singular the tenements, hereditaments, and appurtenances thereunto belonging or in anywise appertaining," &c.

The decree of the court finds "that the defendant corporation, the Willamette Woolen Manufacturing Company, did have full authority and power to make and execute the mortgage now here sought to be foreclosed, and that it conferred upon the plaintiff corporation, by said mortgage, a lien upon all its right and power, under said Territorial act, to take water from the Santiam River in upon its franchise touching the taking, carrying, and using of said water, and all the rights, privileges, and uses incident thereto," and orders a sale of the property as mortgaged unless the defendant company pay the sum of $15,606.51 within thirty days from the date of the decree.

The right of the corporation to make a mortgage which should cover everything described in this mortgage under ordinary acts of incorporation, or the provisions usually found in such acts, might be an interesting question. It also admits of doubt whether the mortgagor corporation in this case intended, by the use of the general language found in this instrument describing what was conveyed, to transfer all of

Digitized by Google

the powers, the privileges, and the franchises conferred upon it by its charter. It was undoubtedly desirable, in making this mortgage, that if it became necessary to sell under it, the purchaser, in getting the realty, the houses, the mills, the manufacturing machinery, the conduits through which the water-power came to operate upon that machinery, and all the tangible property necessary to the use of that water-power, should also get the privilege of using it; and so far as the privilege of using that particular water appropriated to these mills was a franchise or special grant to the corporation, it was intended to be conveyed in the mortgage. For all the powers which it was necessary to exercise in the use of this water as a manufacturing motive power, the Woolen Company intended to create a lien upon the property it mortgaged.

But there were franchises created by the act of incorporation which would be of no value to the purchaser, which, in the nature of things, could not be transferred to it, and which were not intended to be transferred to it. Obviously among these was the right to exist as a corporation. The sale under the decree of foreclosure did not annihilate the Willamette Woolen Manufacturing Company so that it no longer had any existence. Nor was its power to make contracts, to sue and be sued, to have a common seal, to buy other lands and sell them, to make by-laws, and to do many other things which an incorporated body can do, and which are described in the second section of its charter, ended with such sale. Nor is it all clear that, if it had sold outright the property which it mortgaged to this company, it would not have still had the right to take other water from the Santiam River and conduct it to other mills and other places for the purposes of manufacture, provided it did not interfere with or limit the water and the use of the water which it had sold.

It is, however, unnecessary to examine these matters very critically. The charter itself seems to have given unlimited power to the company to sell everything it had, including its exclusive right to the hydraulic powers and privileges created by the water which it takes from the Santiam River. Such is the express language of the sixth section of the charter.

Digitized by Google

Describing what it is that is granted to this corporation with regard to the water and its use, and, in the same language, what it may do in the way of disposing of it, it says, "said corporation shall have the exclusive right to the hydraulic powers and privileges created by the water which it takes from the Santiam River, and may use, rent, or sell the same, or any portion thereof, as it may deem expedient."

There seems to be here no limitation upon the power of the corporation to dispose of whatever it acquired under the statute which called it into being. Describing in the same sentence that it shall have "the exclusive right to the hydraulic powers and privileges created by the water which it takes from the Santiam River," it declares that it "may use, rent, or sell the same," which means all of it; and to show that it does mean all of it, there is added after the words "sell the same," the further clause, "or any portion thereof, as it may deem expedient."

It is hardly necessary to say that this right to sell in these general and strong terms, or to rent or to use it, must include the power to mortgage it. A mortgage is in effect a sale with a power of defeasance, which may ultimately end in an absolute transfer of the title. This language is in its nature inconsistent with a limitation upon the power of the company to transfer its rights and privileges. If there is anything peculiar in the word franchise it must include, in any definition that can be given it, this word "privileges;" especially when the statute speaks of "the exclusive right to the hydraulic powers and privileges."

As we have already said, it would be unprofitable to go into an inquiry of how far the corporation could have transferred these exclusive rights and privileges to anybody else, and how far it could have divested itself of them, and of its power to use them if no such language had been in the charter. But the supreme legislative power, which had the right to make this corporation, and to which it would be subject more or less in its exercise of the powers conferred upon it, has also said, as it had a right to say, that it may sell these privileges, may part with them, and may transfer them to other persons, and we

Digitized by Google

think this language is sufficient warrant for anything actually conveyed by the mortgage and by the decree of the court. The decree is, therefore,

Affirmed.

THE HARRISBURG.

APPEAL FROM THE CIRCUIT COURT OF THE UNITED STATES FOR THE EASTERN DISTRICT OF PENNSYLVANIA.

Argued April 7, 1886. — Decided November 15, 1886.

In the absence of an act of Congress or a statute of a State giving a right of action therefor, a suit in admiralty cannot be maintained in the courts of the United States to recover damages for the death of a human being on the high seas, or on waters navigable from the sea, which is caused by negligence.

If a suit *in rem* can be maintained in admiralty against an offending vessel for the recovery of damages for the death of a human being on the high seas, or on waters navigable from the sea, which is caused by negligence, when an action at law is given therefor by statute in the State where the wrong was done or where the vessel belonged, (which is not decided,) it must be commenced within the period prescribed by the State statute for the beginning of process there; the time within which the suit should be commenced operating as a limitation of the liability created by statute, and not of the remedy only.

The following is the case, as stated by the court.

This is a suit *in rem* begun in the District Court of the United States for the Eastern District of Pennsylvania, on the 25th of February, 1882, against the Steamer Harrisburg, by the widow and child of Silas E. Rickards, deceased, to recover damages for his death caused by the negligence of the steamer in a collision with the schooner Marietta Tilton, on the 16th of May, 1877, about one hundred yards from the Cross Rip Light Ship, in a sound of the sea embraced between the coast of Massachusetts and the Islands of Martha's Vineyard and Nantucket, parts of the State of Massachusetts. The steamer was engaged at the time of the collision in the coasting trade, and belonged to the port of Philadelphia, where she

Digitized by Google

was duly enrolled according to the laws of the United States. The deceased was first officer of the schooner, and a resident of Delaware, where his widow and child also resided when the suit was begun.

The statutes of Pennsylvania in force at the time of the collision provided that, "whenever death shall be occasioned by unlawful violence or negligence, and no suit for damages be brought by the party injured, during his or her life," "the husband, widow, children, or parents of the deceased, and no other relative," "may maintain an action for and recover damages for the death thus occasioned." "The action shall be brought within one year after the death, and not thereafter." Brightly's Purdon's Dig., 11th ed., 1267, §§ 3, 4, 5; Act of April 15, 1851, § 18; Act of April 6, 1855, §§ 1, 2.

By a statute of Massachusetts relating to railroad corporations, it was provided that "if, by reason of the negligence or carelessness of a corporation, or of the unfitness or gross negligence of its servants or agents while engaged in its business, the life of any person, being in the exercise of due diligence, . . . is lost, the corporation shall be punished by a fine not exceeding five thousand nor less than five hundred dollars, to be recovered by indictment and paid to the executor or administrator for the use of the widow and children." . . . "Indictments against corporations for loss of life shall be prosecuted within one year from the injury causing the death." Mass. Gen. Stats. 1860, c. 63, §§ 97–99; Stat. 1874, c. 372, § 163.

No innocent parties had acquired rights to or in the steamer between the date of the collision and the bringing of the suit.

Upon this state of facts the Circuit Court gave judgment against the steamer in the sum of $5100, for the following reasons:

"1. In the admiralty courts of the United States the death of a human being upon the high seas or waters navigable from the sea, caused by negligence, may be complained of as an injury, and the wrong redressed under the general maritime law.

"2. The right of the libellants does not depend upon the

Digitized by Google

statute law of either the States of Massachusetts or Pennsylvania, and the limitation of one year in the statutes of these States does not bar this proceeding.

"3. Although an action in the State courts of either Massachusetts or Pennsylvania would be barred by the limitation expressed in the statutes of those States, the admiralty is not bound thereby, and in this case will not follow the period of limitation therein provided and prescribed. The drowning complained of was caused by the improper navigation, negligence, and fault of the said steamer, producing the collision aforesaid, and the libellants are entitled to recover.

"4. As there are no innocent rights to be affected by the present proceedings, and no inconvenience will result to the respondents from the delay attending it, the action, if not governed by the statutes aforesaid, is not barred by the libellant's laches." 15 Fed. Rep. 610.

From that decree this appeal was taken.

Mr. Thomas Hart, Jr., for appellant.

Mr. Henry Flanders for appellees.

It is not controverted by counsel for appellant that a marine tort is within admiralty jurisdiction; or that one who suffers loss by it is entitled to compensation: it is only denied that if the injury causes death, the cause of action survives in admiralty to the widow and children. This contention is supposed to be founded on the common law. But the common law rule grew out of the feudal system, and is founded on the idea that the private wrong is merged in the public offence. Nevertheless, even the common law did not wholly deny redress to the widow and child. It allowed an appeal of murder, which was not abolished until 1818, 59. Geo. III. c. 46, § 1. *Ex parte Gordon*, 104 U. S. 515 is understood to be an intimation to the bar that, as the common law rule has been rejected by nearly all enlightened states, it will be rejected by this court when opportunity offers. Lord Campbell questioned the common law doctrine when it was ruled by Lord Ellenborough in *Baker v. Bolton*, 1 Camp. 493. And see 9 & 10 Vict. c. 93.

Digitized by Google

About the same time the Scotch courts in *Drummond* or *Brown* v. *McGregor*, Fac. Coll. 1812–1814, 232, in an action brought by the widow and children of a person killed while travelling on the top of a long coach, which was overturned by a post-chaise, found the proprietors of the two vehicles liable conjointly to the widow in the sum of £200, and to each child in the sum of £130. The case was affirmed on appeal, on the authority of *Black* v. *Cadell*, decided in 1804. And in *Patterson* v. *Wallace*, 1 Macqueen, 748, it was not controverted that recovery could be had by a widow and children for loss sustained by the death of the husband and father.

International Law is in accord with this doctrine. (*a*) Grotius says: "He that kills a man unjustly is bound to physicians and surgeons, if any be made use of, and to make such reparation to those whom the deceased person was obliged *in duty* to maintain, such as parents, wife, and children, as the hope of that maintenance (regard being had to the age of the deceased) amounts to." Book 2, c. 17. (*b*) Rutherford, in his "Institutes on Natural Law," in remarking upon the supposed distinction between the life of a freeman and a slave, says: "If we observe that the life of the slave can no otherwise be looked upon as the master's property, than as he had an interest in it, we shall find that there is no reason for this distinction, since as far as the relations of a free man had an interest in his life, the person who murdered him is obliged to make them reparation. So that in either case, in settling the damages, the life of the deceased is estimated according to the interest which those who survive him might have in it." Book 1, c. 17, § 9. (*c*) Domat, in his work on the Civil Law, says: "If that which has been thrown out causes the death of a person, the person who did it . . . will be liable to make good the damage that is done." Book 11, Title VIII., § 1, Art. IV. (*d*) Puffendorf says: "The unjust slayer was obliged to defray the charges of physicians and chirurgeons, and to give to those persons whom the deceased was, by a full and perfect *duty*, bound to maintain, as wife, children, and parents, so much as the hope of their maintenance shall be valued at." Law of Nature, Book 3, c. 1, § 7. (*e*) And Bell, in his great

Digitized by Google

work entitled, "Principles of the Law of Scotland," § 2029, says: "The law takes cognizance of the loss and suffering of the family of a person killed, and gives assythment, both as indemnification and as *solatium*. This was formerly taxed by the Barons of Exchequer, but in more modern times it is matter for the jurisdiction of the Court of Session. . . . The right of action is with the wife and family of the deceased; the division being like that of the goods in communion."

The decisions of the admiralty courts of the United States are in accord with these principles. *The Sea Gull*, Chase's Dec. 145; *The Towanda*, 34 Leg. Int. 394; *The E. B. Ward, Jr.* 17 Fed. Rep. 456; *The David Reeves*, 5 Hughes, 89; *The Charles Morgan*, 2 Flippin, 274; *The Sylvan Glen*, 5 Fed. Rep. 335; *The Manhasset*, 18 Fed. Rep. 918.

The case of *Hubgh* v. *New Orleans & Carollton Railroad*, 6 La. Ann. 495; *S. C.* 54 Am. Dec. 565, and the case of *Herman* v. *New Orleans & Carollton Railroad*, 11 La. Ann. 5, also require a passing comment. The action in each case was based on Article 2294 of the Louisiana Civil Code, and the decision turned on the construction and interpretation of that article. The article was copied from the Code Napoléon, and was identical with the corresponding article in that code. The French *Cour de Cassation* had held that it gave redress to the personal representatives of a deceased for the wrongful loss of his life. The court in *Hubgh* v. *New Orleans & Carollton Railroad* held otherwise. The question was again discussed in *Hermann* v. *New Orleans & Carollton Railroad*, and in this, as in the former case, there was a great parade of authorities "of learned length and thundering sound," but on the principle of *stare decisis* the prior decision was maintained. The court, however, said: "Were the question *res nova*, we should feel great difficulty in arriving at a satisfactory conclusion." But whether the *Cour de Cassation*, or the Louisiana Court was right, or whether, in the discussion Partida or Pothier was to be considered the better authority, is not important. The error of the court was corrected by the wisdom of the Legislature, and the local law of Louisiana was put in harmony with the law of admiralty.

Digitized by Google

The State statutes of limitation are not applicable to proceedings in admiralty. The result of the authorities is stated by this court in *The Key City*, 14 Wall. 660.

Mr. Chief Justice Waite, after making the foregoing statement of the case, delivered the opinion of the court.

The question to be decided presents itself in three aspects, which may be stated as follows:

1. Can a suit in admiralty be maintained in the courts of the United States to recover damages for the death of a human being on the high seas, or waters navigable from the sea, caused by negligence, in the absence of an act of Congress, or a statute of a State, giving a right of action therefor?

2. If not, can a suit *in rem* be maintained in admiralty against an offending vessel for the recovery of such damages when an action at law has been given therefor by statute in the State where the wrong was done, or where the vessel belonged?

3. If it can, will the admiralty courts permit such a recovery in a suit begun nearly five years after the death, when the statute which gives the right of action provides that the suit shall be brought within one year?

It was held by this court, on full consideration, in *Insurance Company* v. *Brame*, 95 U. S. 756, "that by the common law no civil action lies for an injury which results in death." See also *Dennick* v. *Railroad Co.*, 103 U. S. 11, 21. Such also is the judgment of the English courts, where an action of the kind could not be maintained until Lord Campbell's Act, 9 and 10 Vict. c. 93. It was so recited in that act, and so said by Lord Blackburn in *Seward* v. *The Vera Cruz*, 10 App. Cas. 59, decided by the House of Lords in 1884. Many of the cases bearing on this question are cited in the opinion in *Insurance Co.* v. *Brame*. Others will be found referred to in an elaborate note to *Carey* v. *Berkshire Railroad*, 1 Cush. 475, in 48 Am. Dec. 616, 633. The only American cases in the common law courts against the rule, to which our attention has been called, are, *Cross* v. *Guthery*, 2 Root, 90; *S. C.* 1 Am. Dec. 61; *Ford*

Digitized by Google

. *Monroe*, 20 Wend. 210; *James* v. *Christy*, 18 Missouri, 162; nd *Sullivan* v. *Union Pacific Railroad*, 3 Dillon, 334. *Cross* . *Guthery*, a Connecticut case, was decided in 1794, and can-ot be reconciled with *Goodsell* v. *Hartford & New Haven Railroad*, 33 Conn. 55, where it is said: "It is a singular fact, hat by the common law the greatest injury which one man an inflict on another, the taking of his life, is without a pri-ate remedy." *Ford* v. *Munroe*, a New York case, was sub-tantially overruled by the Court of Appeals of that State in *Green* v. *Hudson River Railroad*, 2 Keyes, 294; and *Sullivan* . *Union Pacific Railroad*, decided in 1874 by the Circuit ourt of the United States for the District of Nebraska, is irectly in conflict with *Insurance Co.* v. *Brame*, decided here n 1878.

We know of no English case in which it has been authori-atively decided that the rule in admiralty differs at all in this articular from that at common law. Indeed, in *The Vera Cruz*, *supra*, it was decided that even since Lord Campbell's ct a suit *in rem* could not be maintained for such a wrong. pinions were delivered in that case by the Lord Chancellor Selborne), Lord Blackburn, and Lord Watson. In each of hese opinions it was assumed that no such action would lie ithout the statute, and the only question discussed was hether the statute had changed the rule.

In view, then, of the fact that in England, the source of our ystem of law, and from a very early period one of the princi-al maritime nations of the world, no suit in admiralty can be aintained for the redress of such a wrong, we proceed to nquire whether, under the general maritime law as adminis-ered in the courts of the United States, a contrary rule has een or ought to be established.

In *Plummer* v. *Webb*, 1 Ware, 75, decided in 1825, Judge Ware held, in the District Court of the United States for the District of Maine, in an admiralty suit *in personam*, that "the ncient doctrine of the common law, founded on the principles f the feudal system, that a private wrong is merged in a felony, s not applicable to the civil polity of this country, and has ot been adopted in this State" (Maine), and that "a libel may

Digitized by Google

be maintained by a father, in the admiralty, for consequential damages resulting from an assault and battery of his minor child," "after the death of the child, though the death was occasioned by the severity of the battery;" but the suit was dismissed, because upon the evidence it did not appear that the father had in fact been damaged. The case was afterwards before Mr. Justice Story on appeal, and is reported in 4 Mason, 380, but the question now involved was not considered, as the court found that the cause of action set forth in the libel and proved was not maritime in its nature.

We find no other reported case in which this subject was at all discussed until *Cutting* v. *Seabury*, 1 Sprague, 522, decided by Judge Sprague in the Massachusetts district in 1860. In that case, which was *in personam*, the judge said that "the weight of authority in the common law courts seems to be against the action, but natural equity and the general principles of law are in favor of it," and that he could not consider it "as settled that no action can be maintained for the death of a human being." The libel was dismissed, however, because on the facts it appeared that no cause of action existed even if in a proper case a recovery could be had. The same eminent judge had, however, held as early as 1849, in *Crapo* v. *Allen*, 1 Sprague, 185, that rights of action in admiralty for mere personal torts did not survive the death of the person injured.

Next followed the case of *The Sea Gull*, Chase's Dec. 145, decided by Chief Justice Chase in the Maryland district in 1867. That was a suit *in rem* by a husband to recover damages for the death of his wife caused by the negligence of the steamer in a collision in the Chesapeake Bay, and a recovery was had, the Chief Justice remarking that "there are cases, indeed, in which it has been held that in a suit at law no redress can be had by the surviving representative for injuries occasioned by the death of one through the wrong of another; but these are all common law cases, and the common law has its peculiar rules in relation to this subject, traceable to the feudal system and its forfeitures," and "it better becomes the humane and liberal character of proceedings in admiralty to give than to withhold the remedy, when not required to withhold it by es-

Digitized by Google

ablished and inflexible rules." In his opinion he refers to the ading English case of *Baker* v. *Bolton*, 1 Camp. 493, where ne common law rule was recognized and followed by Lord llenborough in 1808, and to *Carey* v. *Berkshire Railroad*, Cush. 475; *S. C.* 48 Am. Dec. 616, to the same effect, de-ded by the Supreme Court of Massachusetts in 1848, and nen says that "in other States the English precedent has ot been followed." For this he cites as authority *Ford* *Munroe*, *supra*, decided in 1838, but which, as we have een, had been overruled by *Green* v. *Hudson River Rail-oad* in 1866, only a short time before the opinion of the hief Justice was delivered, and *James* v. *Christy*, 18 Mis-ouri, 162, decided by the Supreme Court of Missouri in 853. The case of *The Highland Light*, Chase's Dec. 150, was efore Chief Justice Chase in Maryland about the same time ith *The Sea Gull*, and while adhering to his ruling in that ase, and remarking that "the admiralty may be styled, not nproperly, the human providence which watches over the ghts and interests of those 'who go down to the sea in ships nd do their business on the great waters,'" he referred to a laryland statute giving a right of action in such cases, and nen dismissed the libel because on the facts no liability was stablished against the vessel as an offending thing.

Afterwards, in 1873, Mr. Justice Blatchford, then the judge f the District Court for the Southern District of New York, ustained a libel by an administrator of an infant child who ook passage on the steamer City of Brussels with his mother t Liverpool, to be carried to New York, and while on the oyage was poisoned by the carelessness of the officers of the essel and died on board. *The City of Brussels*, 6 Ben. 370. The decision was placed on the ground of a breach of the con-ract of carriage.

The next case in which this jurisdiction was considered is hat of *The Towanda*, 34 Leg. Int. (Philadelphia) 394; *S. C.* nder the name of *Coggins* v. *Helmsley*, 5 Cent. Law Jour. 418, lecided by Judge McKennan in the Circuit Court for the East-rn District of Pennsylvania in 1877, and before the judgment f this court in *Insurance Co.* v. *Brame*, *supra*. In that case

Digitized by Google

the ruling of Chief Justice Chase in *The Sea Gull* was approved, and the same authorities were cited, with the addition of *Sullivan* v. *Union Pacific Railroad*, *supra*.

In *The Charles Morgan*, 2 Flip. 274, before Judge Swing, in the Southern District of Ohio, on the 24th of October, 1878, the subject was again considered. That was a suit *in rem*, by the wife of a passenger on a vessel, to recover damages for the death of her husband; and in deciding upon the sufficiency of a plea to the jurisdiction, the judge, after quoting a remark of Mr. Justice Clifford in *The Steamboat Co.* v. *Chase*, 16 Wall. 532, that "difficulties, it must be conceded, will attend the solution of this question, but it is not necessary to decide it in this case," retained the libel because, "as the case at bar will probably go the Supreme Court of the United States, it will be better for all parties that the appeal should be taken after a trial upon its merits." Our decision in *Insurance Co.* v. *Brame* was announced on the 21st of January, 1878, but was evidently not brought to the attention of the judge, because, while citing quite a number of cases to show that the weight of authority was in favor of the English rule, he makes no reference to it. Indeed, it is probable that the volume of the reports in which it appears had not been generally distributed when his opinion was filed.

It thus appears that prior to the decision in *Insurance Co.* v. *Brame* the admiralty judges in the United States did not rely for their jurisdiction on any rule of the maritime law different from that of the common law, but on their opinion that the rule of the English common law was not founded in reason, and had not become firmly established in the jurisprudence of this country. Since that decision the question has been several times before the Circuit and District Courts for consideration. In *The David Reeves*, 5 Hughes, 89, Judge Morris, of the Maryland district, considering himself bound by the authority of *The Sea Gull*, which arose in his district, and had been decided by the Chief Justice in the Circuit Court, maintained jurisdiction of a suit *in rem* by a mother for the death of her son in a collision that occurred in the Chesapeake Bay. He conceded, however, that this was contrary to the

Digitized by Google

ɔmmon law and to the admiralty decisions in England, but, the question had never been passed on in this court, he elded to the authority of the Circuit Court decision in his vn district.

The case of *Holmes* v. *Oregon and California Railway*, Sawyer, 262; *S. C.* 5 Fed. Rep. 75, was decided by Judge eady, in the Oregon district, on the 28th of February, 1880, d he held that a suit *in personam* could be prosecuted in lmiralty against the owner of a ferry-boat engaged in carry-g passengers across the Wallamet River, between East Port-nd and Portland, for the death of a passenger caused by the egligence of the owner. He conceded that no such action ould lie at common law, but, as in his opinion the civil law as different, he would not admit that in admiralty, "which not governed by the rules of the common law," the suit uld not be maintained. His decision was, however, actually t on the Oregon statute, which gave an action at law for mages in such a case, and the death occurred within the risdiction of the State. Judge Sawyer had previously de-ded, in *Armstrong* v. *Beadle*, 5 Sawyer, 484, in the Circuit ourt for the District of California, that an action at law der a similar statute of California would not lie for a death hich occurred on the high seas and outside of the territorial nits of the State. In *The Clatsop Chief*, 7 Sawyer, 274; *C.* 8 Fed. Rep. 163, Judge Deady sustained an action *in m* against an offending vessel for a death caused by negli-nce in the Columbia River and within the State of Oregon. In *The Long Island North Shore Passenger and Freight ans. Co.*, 5 Fed. Rep. 599, which was a suit for the benefit the act of Congress limiting the liability of the owners of ssels, Judge Choate, of the Southern District of New York, cided that in New York, where there is a statute giving a ght of action in cases of death caused by negligence, claims r damages of that character might be included among the bilities of the owner of the offending vessel. In that case e injury which caused the death occurred within the limits the State. In the opinion it is said (p. 608): "It has been iously doubted whether the rule of the common law, that a

Digitized by Google

cause of action for an injury to the person dies with the person, is also the rule of the maritime law. There is some authority for the proposition that it is not, and that in admiralty a suit for damage in such a case survives. *The Sea Gull*, 2 L. T. R. 15; *S. C.* Chase's Dec. 145; *Cutting* v. *Seabury*, 1 Sprague, 522; *The Guldfaxe*, 19 L. T. R. 748; *S. C.* L. R. 2 Ad. & Ecc. 325; *The Epsilon*, 6 Ben. 379, 381. But, however it may be in respect to the original jurisdiction of admiralty courts, I see no valid reason why the right of a person to whom, under the municipal law governing the place of the transaction and the parties to it, the title to the chose in action survives, or a new right to sue is given for damages resulting from a tort, the admiralty courts, in the exercise of their jurisdiction *in personam* over marine torts, should not recognize and enforce the right so given." This case was decided on the 12th of February, 1881, and on the 21st of the same month Judge Brown, of the Eastern District of Michigan, in *The Garland*, 5 Fed. Rep. 924, held that a suit *in rem* could be maintained by a father for the loss of the services of his two sons, killed in a collision in the Detroit River. In his opinion he said: "Were this an original question, . . . I should feel compelled to hold that this libel could not be maintained. But other courts of admiralty in this country have furnished so many precedents for a contrary ruling, I do not feel at liberty to disregard them, although I am at loss to understand why a rule of liability differing from that of the common law should obtain in these courts." His decision was, however, finally put on a statute of Michigan which gave an action at law for such damages.

In *The Sylvan Glen*, 9 Fed. Rep. 335, Judge Benedict, of the Eastern District of New York, dismissed a suit *in rem* on the ground that the statute of New York giving an action for damages in such cases created no maritime lien. This case was decided on the 4th of October, 1881. At November term, 1882, of the Circuit Court for the Eastern District of Louisiana, Judge Billings decided, in *The E. B. Ward, Jr.*, 4 Woods, 145; *S. C.* 16 Fed. Rep. 255, that a suit *in rem* could not be maintained for damages for the death of a person in a

Digitized by Google

collision on the high seas through the fault of a vessel having its home port in New Orleans, as the statute of Louisiana did not apply to cases where the wrongful act which caused the death occurred outside of the State. Afterwards, in June, 1883, Judge Pardee, of the Circuit Court for the same district, decided otherwise. *The E. B. Ward, Jr.*, 17 Fed. Rep. 456. In his opinion he said, p. 459: "Upon the whole case, considering the natural equity and reason of the matter, and the weight of authority as determined by the late adjudicated cases in the admiralty courts of the United States, I am inclined to hold that the ancient common law rule, '*actio personalis moritur cum persona*,' if it ever prevailed in the admiralty law of this country, has been so modified by the statutory enactments of the various States and the progress of the age, that now the admiralty courts 'are permitted to estimate the damages which a particular person has sustained by the wrongful killing of another,' and enforce an adequate remedy. At all events, as the question is an open one, it is best to resolve the doubts in favor of what all the judges consider to be natural equity and justice.'" He also was of opinion that, as the offending vessel was wholly owned by citizens of Louisiana, and the port of New Orleans was her home port, the Louisiana statute applied to her, and that the court of admiralty could enforce such a right of action in a proceeding *in rem*. See also *The E. B. Ward, Jr.*, 23 Fed. Rep. 900.

The case of *The Manhasset*, 18 Fed. Rep. 918, was decided by Judge Hughes, of the Eastern Virginia District, in January, 1884, and in that it was held that a suit *in rem* could not be maintained by the administratrix against a vessel, under the statute of Virginia which gave an action for damages caused by the death of a person, even though the tortious act was committed within the territorial limits of the State, but that the widow and child of the deceased man had a right of action, by a libel *in rem*, under the general maritime law, which they could maintain in their own names and for their own benefit. In so deciding the judge said: "The decision of Chief Justice Chase in the case of *The Sea Gull*, *supra*, establishes the validity of such a libel in this circuit. I would main-

Digitized by Google

tain its validity independently of that precedent. Such a right of action is a maritime right, conferred by the general law maritime; (Domat, Civil Law, pt. 1, bk. 2, tit. 8, § 1, art. 4; Grotius, lib. 2, c. 17, § 13; Ruth. Inst. 206; Bell, Prin. Sc. Laws, p. 748, § 2029; Ersk. Inst., bk. 4, tit. 4, § 105;) and is not limited as to time by the twelve months' limitation of the State statute."

The last American case to which our attention has been called is that of *The Columbia*, 27 Fed. Rep. 900, decided by Judge Brown, of the Southern District of New York, during the present year. In giving his opinion, after referring to the fact that, as he understood, the question was then pending in this court, the judge said: "Awaiting the result of the determination of that court, and without referring to the common law authorities, I shall hold in this case, as seems to me most consonant with equity and justice, that the pecuniary loss sustained by persons who have a legal right to support from the deceased, furnishes a ground of reclamation against the wrong-doer which should be recognized and compensated in admiralty."

In *Monaghan* v. *Horn*, *in re The Garland*, 7 Canada Sup. Ct. 409, the Supreme Court of Canada held that a mother could not sue in her own name in admiralty for the loss of the life of her son, on the ground that no such action would lie without the aid of a statute, and the statute of the Province of Ontario, where the wrong was done, and which was substantially the same as Lord Campbell's act, provided that the action should be brought in the name of the administrator of the deceased person. No authoritative judgment was given as to the right of an administrator to sue in admiralty under that act. This was in 1882, before *The Vera Cruz*, *supra*, in the House of Lords.

Such being the state of judicial decisions, we come now to consider the question on principle. It is no doubt true that the Scotch law "takes cognizance of the loss and suffering of the family of a person killed," and gives a right of action therefor under some circumstances. Bell's Prin. Laws of Scot., 7th ed., p. 934, § 2029; *Cadell* v. *Black*, 5 Paton, 567; *Weems* v. *Mathieson*, 4 Macqueen, 215. Such also is the law of France.

Digitized by Google

28 Merlin, Répertoire, 442, *verbo* Réparation Civile, § iv; *Rolland* v. *Gosse*, 19 Sirey (Cour de Cassation), 269. It is said also that such was the civil law, but this is denied by the Supreme Court of Louisiana in *Hubgh* v. *The New Orleans & Carollton Railroad*, 6 La. Ann. 495; *S. C.* 54 Am. Dec. 565, where Chief Justice Eustis considers the subject in an elaborate opinion after full argument. A reargument of the same question was allowed in *Hermann* v. *New Orleans & Carollton Railroad*, 11 La. Ann. 5, and the same conclusion reached after another full argument. See also Grueber's Lex Aquilia, 17. But however this may be, we know of no country that has adopted a different rule on this subject for the sea from that which it maintains on the land, and the maritime law, as accepted and received by maritime nations generally, leaves the matter untouched. It is not mentioned in the laws of Oleron, of Wisbuy, or of the Hanse Towns, 1 Pet. Adm. Dec. Appx.; nor in the Marine Ordinance of Louis XIV., 2 Pet. Adm. Dec. Appx.; and the understanding of the leading text writers in this country has been that no such action will lie in the absence of a statute, giving a remedy at law for the wrong. Benedict Adm., 2d ed., § 309; 2 Parsons' Ship. & Adm. 350; Henry, Adm. Jur. 74. The argument everywhere in support of such suits in admiralty has been, not that the maritime law, as actually administered in common law countries, is different from the common law in this particular, but that the common law is not founded on good reason, and is contrary to "natural equity and the general principles of law." Since, however, it is now established that in the courts of the United States no action at law can be maintained for such a wrong in the absence of a statute giving the right, and it has not been shown that the maritime law, as accepted and received by maritime nations generally, has established a different rule for the government of the courts of admiralty from those which govern courts of law in matters of this kind, we are forced to the conclusion that no such action will lie in the courts of the United States under the general maritime law. The rights of persons in this particular under the maritime law of this country are not different from those under the

Digitized by Google

common law, and as it is the duty of courts to declare the law, not to make it, we cannot change this rule.

This brings us to the second branch of the question, which is, whether, with the statutes of Massachusetts and Pennsylvania above referred to in force at the time of the collision, a suit *in rem* could be maintained against the offending vessel if brought in time. About this we express no opinion, as we are entirely satisfied that this suit was begun too late. The statutes create a new legal liability, with the right to a suit for its enforcement, provided the suit is brought within twelve months, and not otherwise. The time within which the suit must be brought operates as a limitation of the liability itself as created, and not of the remedy alone. It is a condition attached to the right to sue at all. No one will pretend that the suit in Pennsylvania, or the indictment in Massachusetts, could be maintained if brought or found after the expiration of the year, and it would seem to be clear that, if the admiralty adopts the statute as a rule of right to be administered within its own jurisdiction, it must take the right subject to the limitations which have been made a part of its existence. It matters not that no rights of innocent parties have attached during the delay. Time has been made of the essence of the right, and the right is lost if the time is disregarded. The liability and the remedy are created by the same statutes, and the limitations of the remedy are, therefore, to be treated as limitations of the right. No question arises in this case as to the power of a court of admiralty to allow an equitable excuse for delay in suing, because no excuse of any kind has been shown. As to this, it only appears that the wrong was done in May, 1877, and that the suit was not brought until February, 1882, while the law required it to be brought within a year.

The decree of the Circuit Court is reversed, and the cause remanded, with instructions to dismiss the libel.

Digitized by Google

CROW v. OXFORD.

ERROR TO THE CIRCUIT COURT OF THE UNITED STATES FOR THE DISTRICT OF KANSAS.

Submitted October 25, 1886. — Decided November 29, 1886.

In a suit on bonds of the same issue as those adjudged to be invalid, in *McClure* v. *Township of Oxford*, 94 U. S. 429, it was sought to uphold the bonds as issued under the general act of Kansas, of March 2d, 1872, c. 68, the bonds purporting, by their face, to have been issued under the special act of March 1st, 1872, c. 158. As the general act required certain proceedings to be taken before the bonds could be lawfully issued, and the town records showed that those proceedings were not taken, and that all that was done was done under the special act, the possibility that the bonds were issued under the general act was excluded, and the recitals in the bonds could not aid the plaintiff.

The case distinguished from *Commissioners* v. *January*, 94 U. S., 202, and *Anderson County* v. *Beal*, 113 U. S. 227.

The certificate of the auditor of the State, endorsed on each bond, that it was "regularly and legally issued," purporting to have been made in accordance with the general act, could not aid the plaintiff, because the bonds were not such as the auditor was authorized by that act to register and certify.

The case distinguished, in that respect, from *Lewis* v. *Commissioners*, 105 U. S. 739.

The case is stated in the opinion of the court.

Mr. S. E. Brown for plaintiff in error.

Mr. J. Wade McDonald for defendant in error.

Mr. Justice Blatchford delivered the opinion of the court.

This suit was brought in the Circuit Court of the United States for the District of Kansas, by Moses R. Crow against the Township of Oxford, in the County of Sumner, and State of Kansas, to recover the amount of ten bonds, of $500 each, issued by that township, and 140 coupons, of $25 each, cut from those bonds, being in all $8500. It was tried before the court, without a jury, a special finding of facts was made, and

Digitized by Google

a judgment was rendered for the defendant. The plaintiff has sued out a writ of error.

The defendant, on the 15th of April, 1872, made twenty bonds for $500 each. Coupons cut from some of those bonds were the subject of the suit of *McClure* v. *Township of Oxford*, 94 U. S. 429. The bonds and coupons involved in the present suit are all of the forms of the bond and coupon set out in the report of the McClure case, and each bond has endorsed on it, of the date of April 25th, 1872, a certificate duly signed by, and attested by the seal of office of the auditor of the State of Kansas, the certificate being in the form of that contained in the report of the McClure case.

The bonds were made for the purpose of aiding in the construction of a bridge across the Arkansas River, at the town of Oxford, in the township of Oxford; and were issued and delivered in payment for eighty five shares, of $100 each, of the stock of the Oxford Bridge Company, a corporation which erected the bridge, for which the township subscribed, and which it has ever since owned and held. The township paid interest on the bonds up to April 15th, 1877. It received dividends on the stock, amounting to about $650 per annum, from October, 1872, till June, 1876. The following proceedings were had and taken by the trustee, treasurer, and clerk of the township, on the following dates, as shown by the public records of the township:

"MARCH 8TH, 1872.

"Township board met.

"Present: George T. Walton, trustee, and John H. Folks, clerk.

"The fact being known to the clerk that an Act authorizing a majority of the township board to issue bonds for $10,000, and to subscribe stock in the Oxford Bridge Company, after giving notice thereof, and the voters of Oxford township voting thereon, was passed and approved on the 1st day of March, 1872, and believing that, — owing to the danger of a June freshet, injuring or preventing work and increasing the cost of said bridge, and believing the law only required 20 days' notice, it was ordered that such notice be given imme-

Digitized by Google

iately, which notice was given by written notices posted on lark's store, on the post-office at Stanton's store, and at the chool-house in Oxford, believed to be three of the most public laces in the township.

"GEORGE T. WALTON, *Trustee.*
JOHN H. FOLKS, *Clerk.*"

"MARCH 24TH, 1872.

"At a special meeting of the board of Oxford township, held his day — George T. Walton, trustee, and John H. Folks resent — a copy of the — Commonwealth was presented, in hich the law relating to the bridge bonds was published, in hich it was made necessary to give 30 days' notice thereon. was ordered that said election be held on the 8th day of pril, 1872, and additional notices were appended to the riginal notice posted as above stated, so continuing the time ntil the said 8th day of April.

"GEORGE T. WALTON, *Trustee.*
JOHN H. FOLKS, *Clerk.*"

"APRIL 8TH, 1872.

"At a special election held in pursuance of notices and of the ct of March 1st, 1872, authorizing the trustee, treasurer, and erk, or any two of them, of the township of Oxford, county f Sumner, and State of Kansas, to subscribe stock in the xford Bridge Company to the amount of $10,000, to aid in e construction of a bridge across the Arkansas River, at xford, in said county and State, and to issue bonds of said wnship in payment thereof: George T. Walton, Edward lay, Sr., and James Thompson, judges; and James O. Carenter and W. H. Knapp, clerks. Whole number of electors oting, 140; for the bridge and bonds, 126; against the bridge nd bonds, 14. Walton to return poll-books.

"GEORGE T. WALTON, *Trustee.*
JOHN H. FOLKS, *Clerk.*"

"APRIL 10TH, 1872.

"At a meeting of the trustee and clerk of Oxford township, take into consideration the subscribing of stock in the Oxford ridge Company — present, George T. Walton, trustee, and

Digitized by Google

John H. Folks, clerk — it was ordered, that the said George T. Walton, trustee, and John H. Folks, clerk, do subscribe to the capital stock of the Oxford Bridge Company for such amount of capital stock as the ten thousand-dollar bonds may purchase, not to be less than eighty three shares of said stock, and the said George T. Walton and John H. Folks are further authorized to vote the number of votes said township shall be entitled to, at any meeting of stockholders of said bridge company, during their continuance in office, in pursuance of law. Also ordered, that a copy of said law be sealed in this book.

"GEORGE T. WALTON, *Trustee.*
JOHN H. FOLKS, *Clerk.*"

"APRIL 12TH, 1872.

"At a meeting of the board of Oxford township, George T. Walton, trustee, T. E. Clark, treasurer, and John H. Folks, clerk, were present, and subscribed the said bonds to the Oxford Bridge & Ferry Company, and participated in the stockholders' meeting of said company, for and on behalf of the said township; and George T. Walton, T. E. Clark, and John H. Folks were elected directors of said Oxford Bridge & Ferry Company. Said township board authorized William J. Hobson to procure the printing of suitable bonds, and also authorized said William J. Hobson to contract the sale of said bridge bonds at not less than 83 cents, and such higher amount as he may be able to procure; and it was further agreed by said William J. Hobson, in behalf of C. Baker & Co., that, if he shall not be able to sell said bonds for 83 cents or over, the said C. Baker & Co. will take said bonds in payment for the township stock, at 83 cents on the dollar, and make a good and sufficient bond to Oxford township, conditioned that said company will build said bridge, in all respects, in conformity to contract this day signed by the said C. Baker & Co. and the directors of said Oxford Bridge & Ferry Company, said bond to be delivered to the township board of Oxford township, and the bridge bonds to be delivered to said William J. Hob son as soon as may be after said bonds are printed.

"GEORGE T. WALTON, *Trustee.*
JOHN H. FOLKS, *Clerk.*"

Digitized by Google

No other proceedings were had or taken by or before the wnship board in respect to issuing the bonds, except that, on pril 8th, 1872, an election was held in the township on the uestion, with the result set forth on the face of the bonds. he bridge was erected by the corporation, and was maintained a toll bridge until it was destroyed by water on June 9th, 76.

The plaintiff owns and holds the bonds and coupons sued , having purchased them before their maturity, for value, ithout actual notice of any defence to them or of any defect infirmity in the proceedings for issuing them.

The petition of the plaintiff alleged that the bonds were sued in pursuance of an election held in the township in conrmity with an act of the Legislature of Kansas, passed arch 2d, 1872, c. 68.

A special act of the Legislature of Kansas, approved March t, 1872, c. 158, entitled as set forth on the face of the onds, authorized the trustee, treasurer, and clerk of Oxford wnship, (or any two of them,) to issue the bonds of the townip, to the amount of $10,000, for the purpose of aiding in ilding such bridge. It required that the bonds should be in ms not less than $500, payable in ten years from the date of suing, with interest at the rate of ten per cent. per annum, ayable semi-annually, in the City of New York; that interest oupons should be attached, signed by the trustee and attested y the clerk; that the bonds should contain a statement of e purpose for which they were issued, and the result of the ote of the inhabitants of the township on the question of issuig the bonds; that before any of the bonds should be issued, e question of issuing them should be submitted to the legal oters of the township, at an election for that purpose; that e time and place of holding the election should be designated y the trustee, treasurer, and clerk, (or any two of them,) "by iving at least thirty days' notice, by posting written or printed otices thereof in three of the most public places in said townhip; and that if, at the election, a majority of the votes should e for the bridge and bonds, the bonds should be issued." ection 7 of the act was as follows: "This Act shall take

Digitized by Google

effect from and after its publication in the *Kansas Weekly Commonwealth.*" It was published in the *Kansas Weekly Commonwealth*, March 21st, 1872.

The act passed March 2d, 1872, c. 68, referred to in the petition as the act in conformity with which the election was held in pursuance of which the bonds were issued, was an act approved March 2d, 1872, § 24 of which provided that it should "take effect and be in force from and after its publication in the *Kansas Weekly Commonwealth.*" It was published in the *Kansas Weekly Commonwealth*, March 7th, 1872. It bore the title set forth in the auditor's certificate endorsed on the bonds, and was the act therein referred to. It was a general law applicable to all counties, cities, and townships. It embraced bridges, railroads, and water-power. It authorized the issuing of bonds to build bridges, and also as donations, and to pay for stock in aid of railroads and bridges. It graded the amount of bonded debt by taxable property. It allowed bonds of not less than $100, required them to be payable in the City of New York, in not less than five nor more than 30 years from their date, with interest not to exceed 10 per cent. per annum, payable semi-annually, on coupons, the bonds, if issued by a township, to be signed by the township trustee and attested by the township clerk. The bonds could not be issued unless ordered by a vote of the qualified electors of the township. To procure such vote, a petition was required, signed by at least one fifth of the voters of the township, to be presented to the trustee, clerk, and treasurer, asking for a vote; and they were to call an election to be held within 30 days thereafter, and to give notice of it by publication, for at least three consecutive weeks, in each newspaper published in the township, and, if none were published, by posting up written or printed notices in at least five public places in each voting precinct in the township, for at least 20 days preceding the election, the notice to set forth the time and place of holding the election, the bridge proposed to be built, and whether the aid was to be by donation or taking stock.

The question of the validity of the bonds involved in the McClure case was there passed upon by this court. No ques-

Digitized by Google

ion was there presented as to their validity under the act of March 2d, 1872, or as to their having been issued under that ct, and not under the act of March 1st, 1872. It was there eld, that, as the act of March 1st, 1872, did not go into effect ill it was published, and it was not published till March 21st, 872, and required 30 days' notice of the election, and as the onds were dated April 15th, 1872, and stated that the election as held April 8th, 1872, and gave the title of the act, and he date of its approval, their invalidity appeared on their face, n connection with the terms of the act, because 30 days had ot elapsed between the time the law took effect and the day f the election.

It is contended for the plaintiff in the present case, that, as e act of March 2d, 1872, took effect on March 7th, 1872, the ay before the commencement of the proceedings for an elec-on, and there was an interval of full 30 days between March h, 1872, and April 8th, 1872, the day of the election, there as legislative authority under the act of March 2d, 1872, for l that was done. It is urged that in the McClure case no eference was made, in the record or in the arguments of coun-l, to the latter act, and that the question, as to the validity f the bonds under that act, is not controlled by the decision the McClure case. The whole point of the contention in vor of the validity of the bonds is based on the proposition, at the bonds were in fact issued under the authority of, and compliance with, the provisions of the act of March 2d, 872, instead of the act of March 1st, 1872.

The plaintiff, being referred by the bonds to the act of arch 1st, 1872, as the statute under which they were issued, as bound, as was said in the McClure case, to take notice of e statute and of all its requirements. If, finding the bonds valid under that statute, as he is held by law to have one, he claims the right to refer to the act of March 2d, 1872, s the source of authority, because that act was in force from arch 7th, 1872, he was bound to take notice of the require-ents of that act. Looking at them, he was met by the fact at that act required that the proceedings should be initiated y a petition of voters to the trustee, clerk, and treasurer of

Digitized by Google

the township, and be followed by the publication of the notice of election for three consecutive weeks in each newspaper, if any, published in the township, and, if none were published, then by the posting of written or printed notices in at least five public places in each voting precinct in the township, for at least twenty days preceding the election. These proceedings were all variant from those to be had under the act of March 1st, 1872, which did not require any prior petition of voters, nor any newspaper publication of the notice, but only a posting of notices, and those only in three public places in the township, and not in five public places in each voting precinct in the township. Looking at the public records of the township, he was met by the following facts: The proceedings made no reference to the act of March 2d, 1872, or to any petition of voters, but stated that they were taken under the act of March 1st, 1872, and that the officers gave thirty days' notice of election by posting written notices in only three public places in the township. Even though the plaintiff purchased the bond and coupons, as the finding of facts says, "before their maturity, for value, without actual notice of any defence to them, or of any defect or infirmity in the proceedings for issuing them," he was, in the absence of such recitals in the bonds as would protect him, bound by the information open to him in the official records of the officers whose names were signed to the bonds. The recitals in the bonds could not avail him, because, as to the only act recited, that of March 1st, 1872, that act was not in force long enough before the election to allow the required notice to be given; and, as to the act of March 2d, 1872, the records, which showed proceedings not in conformity with it, and the bonds, by the absence of all reference to it, and by their recitals as to the act of March 1st, 1872, excluded the possibility that the town officers issued the bonds, or intended to issue them, under the authority of, or in pursuance of, the act of March 2d, 1872. The statement in the bonds that they were issued "in pursuance of a vote of the qualified electors of said township, had an election held therein on the eighth day of April, A.D. 1872, which said election resulted in a majority of 112 in favor of

Digitized by Google

suing said bonds, in a total vote of 140," can refer only to an ection held under the act of March 1st, 1872, before recited the bond by its title and date, which was an illegal election r want of due notice; and the records showed that the elec-on was held under that act.

The case of *Anderson County* v. *Beal*, 113 U. S. 227, is relied by the plaintiff, but does not aid him. In that case, al-ough the bonds recited the wrong act, the records of the unty officers who issued the bonds did not show any want compliance with the later act, but showed a substantial mpliance with it, and in fact the proceedings were had and ere intended to be had under it. The reference in the bonds the earlier act as the source of authority was thus a mere erical error. In the case at bar, the reference in the bonds the act of March 1st, 1872, was not a clerical error, and e proceedings were intended to be had under that act, and e records show a failure to comply with the act of March 2d, 72, and an attempt to comply only with the act of March t, 1872. In the Anderson County case, legislative authority ving been given for the issue of bonds by a statute under hich the authorities in fact acted, the recital in the bonds, at the bonds were issued in pursuance of the vote of the ectors, was effective to cover any irregularity as to notice, hich did not appear of record, but was sought to be proved *Aunde*. In the present case, no such doctrine is applicable.

In *Commissioners* v. *January*, 94 U. S. 202, an act was cited in the bonds which had been repealed by a later act. he order for the election was made while the earlier act was force. The election was held after its repeal, and after the ew act went into force, but there was no new order of elec-on. Otherwise, all the proceedings after the new act went to force were in conformity with it. It was held that a cital in the bonds, that they were issued "in pursuance of, d in accordance with, the vote of a majority of the quali-ed electors of the county," "at a regular election, held on" day named, estopped the county from raising the objection f the want of an order under the new act, although the old ct, and not the new act, was recited in the bonds, as the

Digitized by Google

statute authority. We think that case is distinguished from the present one by the fact, that in it all the proceedings after the new law took effect were in conformity with it, while in the case at bar, none of the proceedings were in conformity with the act of March 2d, 1872.

Another question is presented in the case before us. Section 14 of the act of March 2d, 1872, provides that the holder of bonds issued under it shall, within 30 days after their delivery, present them to the auditor of the State for registration, and that he shall, on being satisfied that the bonds have been issued according to the provisions of the act, and that the signatures thereto of the officers signing the same are genuine, register them in a book, "and shall, under his seal of office, certify upon such bonds the fact that they have been regularly and legally issued; that the signatures thereto are genuine; and that such bonds have been registered in his office according to law." As each of the bonds in suit has endorsed on it a certificate under the hand and seal of office of the auditor of the State of Kansas, dated April 25th, 1872, certifying that it "has been regularly and legally issued; that the signatures thereto are genuine; and that such bond has been duly registered" in his office, in accordance with the act of March 2d, 1872, giving its title, it is contended, for the defendant, that this certificate concludes all questions as to the regularity and legality of the issuing of the bonds.

In *McClure* v. *Township of Oxford*, although the record set forth at length the certificate of the auditor on the bonds, and the brief of the plaintiff in error contended that such certificate was a final and conclusive determination that the bonds were regularly and legally issued, according to the provisions of the act of March 1st, 1872, this court, in its opinion, made no reference to that point. It was argued in that case, for the defendant in error, that the act of March 2d, 1872, as to registration, did not apply to the bonds, as bonds issued under the act of March 1st, 1872, and that, if it did, the registration could not, as a recital, aid the want of authority disclosed by the face of the bond.

But now it is contended that the provision for registration

Digitized by Google

the act of March 2d, 1872, settles the question, that the onds were bonds issued under that act, and were "regularly nd legally issued," according to the provisions of that act. he case of *Lewis* v. *Commissioners*, 105 U. S. 739, is cited sustaining that view. But we do not so regard it. In at case, § 14 of the Kansas act of March 2d, 1872, was nder consideration in regard to the bonds of a county in ansas, issued, in fact, under that act, each of which had ndorsed on it a certificate by the State auditor, that it had een "regularly and legally issued," and that it had been regtered in his office according to law. A defence was set up gainst a *bona fide* holder of the bonds, that they had been sued in violation of a condition contained in the popular ote, and were fraudulently parted with by the person in hose hands they were put, to be deposited with the State easurer in escrow, to await a compliance with the condition. his court held, as to the effect of the registration, that the termination by the auditor involved an investigation as to ery *fact* essential to the validity of the bonds; that the *bona de* purchaser was not bound, under the circumstances disosed in that case, to find out whether the auditor had ascerined all the facts; and that the auditor was authorized by e statute to inquire whether the bonds were, as a matter of *ct*, of the class which, under the act, should have passed rough the hands of the State treasurer, (it being required the act that some should do so, and others not,) and, also, hether the conditions on which they were deliverable had een performed. But there is nothing in the decision which rries the doctrine further than that the auditor is authorized ascertain whether the *facts* exist which the statute requires ould exist, to make a valid issue of bonds. That this is so shown by the case of *Dixon County* v. *Field*, 111 U. S. 83. that case, there was an innocent holder of bonds, of a unty in Nebraska, and on each bond was endorsed a certifite of the State auditor that the bond was "regularly and gally issued." As against an objection that the bonds were sued in violation of a restriction in the Constitution of the ate as to the amount of bonds to be issued, it was held by

Digitized by Google

this court, under a registration statute like that in the present case, that no conclusive effect was given by the statute to the registration or to the certificate; that the certificate was no more comprehensive or efficacious than the statement in the bond; that such statement did not extend to or cover matters of law; and that "a certificate reciting the actual facts, and that thereby the bonds were conformable to the law, when, judicially speaking, they are not, will not make them so, nor can it work an estoppel upon the county to claim the protection of the law."

As the recitals in the bonds here are of no avail to the plaintiff, as before shown, so the certificate of the auditor does not aid him. The bonds on their face excluded the possibility of their having been issued under the act of March 2d, 1872, and as the public records showed that the proceedings were not taken under that act, and as the auditor was authorized by § 14 of that act only to register bonds issued under that act, and as these bonds did not fall within the purview of bonds authorized to be registered by him under § 15 of that act, it follows that the auditor had no right to decide, as matter of law, that the bonds were bonds of the kind which he was authorized by the act of March 2d, 1872, to register and certify, when, as a matter of law, they were not.

Judgment affirmed.

HAPGOOD *v.* HEWITT.

APPEAL FROM THE CIRCUIT COURT OF THE UNITED STATES FOR THE DISTRICT OF INDIANA.

Argued November 10, 11, 1886. — Decided November 29, 1886.

In a suit in equity by the trustees of a dissolved Missouri corporation to compel an employé of the corporation to convey to the plaintiffs the title to letters-patent obtained by him for an invention made while he was in their employ, it not appearing, from the facts set forth in the bill, that there was any agreement between the employé and the corporation, that

Digitized by Google

it was to have the title to the invention, or to any patent he might obtain for it, it was held, on demurrer, that the bill could not be sustained.

lthough the dissolved corporation assigned its right in the premises to an Illinois corporation organized by the stockholders of the former, whatever implied license the former had to use the invention was confined to it, and was not assignable.

he employé could bring no suit for infringement against the Missouri corporation, for it was dissolved; nor any suit in equity against its trustees for an infringement, for they were not alleged to be using the invention; and a suit at law against the trustees, or the stockholders, of the Missouri corporation, for infringement by it, could not be enjoined, because the theory of the bill was that there was a perfect defence to such a suit.

The case is stated in the opinion of the court.

Mr. Everett W. Pattison, (*Mr. Newton Crane* was with im on the brief,) for appellants, cited: *Hiern* v. *Mill*, 13 Ves. 14; *Powell* v. *Spaulding*, 3 Green, (Iowa,) 443; *Course* v. *tead*, 4 Dall. 22; *McClurg* v. *Kingsland*, 1 How. 202; *Conental Windmill Co.* v. *Empire Windmill Co.*, 8 Blatchford, 95; *Gower* v. *Andrew*, 59 Cal. 119; *Grumley* v. *Webb*, 44 issouri, 444; *Brooks* v. *Byam*, 2 Story, 525; *Wilson* v. *Stolly*, McLean, 1; *Goodyear* v. *Congress Rubber Co.*, 3 Blatchrd, 449; *Goff* v. *Oberteuffer*, 3 Phil. 71; *Hartford* v. *Chipan*, 21 Conn. 488; *Barber* v. *Barber*, 21 How. 582; *Whitg* v. *Graves*, 3 Ban. & A. 222; *Wilkens* v. *Spafford*, Ib. 274.

Mr. E. E. Wood and *Mr. Edward Boyd*, for appellee, subitted on their brief, citing: *McClurg* v. *Kingsland*, 1 How. 2; *Oliver* v. *Rumford Chemical Works*, 109 U. S. 75; *Troy on and Nail Factory* v. *Corning*, 14 How. 193; *Lightner Boston & Albany Railroad*, 1 Lowell, 338.

Mr. Justice Blatchford delivered the opinion of the court.

This is a suit in equity brought in the Circuit Court of th nited States for the District of Indiana, by Charles H. Hapod, James H. Hesse, and John Packer, trustees of Hapgood Company, a dissolved Missouri corporation, and the Hapod Plough Company, an Illinois corporation, against Horace Hewitt. The main object of the suit is to obtain from

Digitized by Google

Hewitt the transfer of letters-patent granted to him for an invention. The defendant interposed a general demurrer to the bill, for want of equity. The Circuit Court sustained the demurrer and dismissed the bill, 11 Bissell, 184, and the trustees have appealed to this court.

The material allegations of the bill are as follows: The Missouri corporation was in existence from before August 1st, 1873, to January 1st, 1880, when it was dissolved. At the latter date the three trustees constituted its board of directors, and Hapgood was president. By virtue of the laws of Missouri, Hapgood and the other two persons became trustees of the corporation, with power to settle its affairs and recover the debts and property belonging to it. Hapgood was the president of the corporation during its entire existence, and had the control and management of its business. All the officers and employés were under his direction. He had power to hire and discharge all agents and employés of every grade, to determine the classes and kinds of goods that should be manufactured, and the general way in which the business should be conducted. The corporation employed a large number of manual laborers, and various employés of higher grades, among them a superintendent, a secretary, a foreman, and a travelling salesman, all of whom had charge of different departments, but were under the control and direction of the president as chief executive officer. The duties of the superintendent were to have general charge of the manufacturing department, subject to the discretion of the president, and to devise and get up such new devices, arrangements, and improvements in the ploughs manufactured as should adapt them to the market, and as should be needed from time to time to suit the wants of customers. Shortly before August 1st, 1873, Hewitt represented to the corporation that he was a man of large experience in mechanical pursuits; that he had been for several years immediately preceding engaged with Avery & Sons, plough manufacturers in Louisville, and had been since 1868 familiar with the manufacturing of ploughs and agricultural implements; that he had been instrumental in devising and getting up the best ploughs manufactured by Avery & Sons;

Digitized by Google

hat the most valuable improvements in the ploughs manufac-
ured by them had been devised by him and adopted at his
uggestion and instigation; that since 1869 he had given his
ndivided attention to the manufacture of ploughs, and under-
tood thoroughly the different kinds of ploughs in the market,
nd the classes of ploughs needed for the trade; and that he
ould and would give to any manufacturer who should secure
is services the benefit of his experience in devising and mak-
ng improvements in the ploughs manufactured. In conse-
uence of these representations and relying upon them, the cor-
oration employed Hewitt to devote his time and services to
etting up, improving, and perfecting ploughs and other goods,
nd to introducing the same; and, that he might be more
ully identified with the corporation, he purchased one share
f its stock, and was elected vice-president. At some time in
874, Hewitt increased his interest in the company by purchas-
ng one half of the shares owned by the president. As a part
f the same transaction, it was agreed between Hewitt and the
orporation, that, from that date, Hewitt should fill the posi-
ion of superintendent of the manufacturing department, and
s such, not only exercise a general supervision over that de-
artment, subject to the president, but also devote his time
nd services to devising improvements in, and getting up and
erfecting, ploughs adapted to the general trade of the corpo-
ation. He accepted the position and held it until the fall of
877, when his connection with the corporation ceased. He
greed, in such new position, to use his best efforts, and devote
is knowledge and skill, in devising and making improvements
n the ploughs manufactured by the corporation, and in getting
p and perfecting ploughs and other agricultural implements
dapted to its trade. In view of the expected value of his
ervices in this latter direction, the corporation was induced to
ay him, and did pay him, a salary of $3000 a year. It was
nanufacturing a plough known as a sulky or riding plough, so
rranged that the plough was carried on a frame supported by
heels, and that the driver of the horses rode on the frame.
Down to the year 1876, this sulky plough had a wooden frame.
During that year, it was thought desirable by the officers of

Digitized by Google

the corporation that a change should be made by the substitution of an iron frame for the wooden one. The officers, including Hewitt, had frequent conversations during the winter of 1875–6 with reference to such change. In those conversations, and in personal conversations with Hewitt, the president stated that he was anxious to retain in the iron sulky all the essential features of the wooden sulky, so far as was consistent with the use of an iron frame, and suggested other features which he thought it important to adopt in the new plough, and Black, a salesman, urged the importance of having an iron axle of an arched form. As the result of these conversations and deliberations, Hewitt was, early in the summer of 1876, directed by the president to proceed at once to devise and build an iron sulky plough according to the suggestions so made, that is, that he should retain in the new plough all the valuable features of the wooden sulky, which the corporation had been manufacturing, should construct the plough of wrought and malleable iron, should adopt the other features suggested by the president and the arch suggested by Black, and should add such additional features as might seem advantageous to him, Hewitt. He was directed to proceed with the work without delay, so that the corporation might be ready to manufacture the new plough for the season of 1877. In accordance with those directions, Hewitt devised and constructed a sulky plough of wrought and malleable iron, and, after some delays, about the 1st of April, 1877, produced a plough satisfactory to the president. During all the time that he was engaged in devising and constructing the new plough, he was in the employ of the corporation, and drawing a salary of $3000 a year. The time during which he was so engaged was the regular working hours in the factory. The men who did the manual labor on the new plough were all employés of, and paid by, the corporation; and all the materials used in its construction were bought and paid for by the corporation. The work, as it progressed, was under the general superintendence of Hewitt, but the work in the respective departments was also under the special superintendence of the respective foremen of those departments, who were also paid by the corporation.

Digitized by Google

During the whole time of the construction of the plough, it was understood by all the parties engaged therein, and by those at whose instance its construction was commenced, that it was being devised and constructed for the use and benefit of the corporation, and as a model for the future construction of sulky ploughs by it. After the plough was completed, and had been accepted by the president as satisfactory, the latter directed Hewitt to go to Chicago and have the necessary malleable castings made for the construction of ploughs after the model. Hewitt did so, obtaining at Chicago castings, moulds, and other things necessary for the future building of ploughs after the model. During the time so spent, he was drawing his regular salary; and all his expenses, as well as the price of the models, castings, and other things obtained by him, were paid by the corporation. During the time Hewitt remained in its employ, he never made any claim of property in any of the devices and improvements made or suggested by him in the new plough, and never stated or claimed that he was entitled to a patent on any of said improvements, or that he had any rights adverse to the corporation in any of said improvements or devices, and never, during the term of his employment, asserted any right to a patent in his own name for such improvements or devices, or any of them. After his connection with the corporation had ceased, and after he had made an arrangement with the president, whereby the latter bought back all his (Hewitt's) stock in the corporation, and after the corporation had been for many months, with the knowledge of Hewitt, engaged in the manufacture of such ploughs, Hewitt, on January 14th, 1878, applied for a patent on the improvements in the plough, and, on the 26th of March, 1878, a patent was granted to him, covering certain parts of the plough, being devices which had been theretofore used by the corporation, with his knowledge and consent. After this patent was issued, he, for the first time, claimed, as he has since claimed, that he had and has an exclusive right to manufacture such parts of the plough as are covered by the patent, and has threatened to enforce his rights under the patent as against the corporation, its representatives, successors, and assigns, and to hold them liable in damages for any infringement of the same.

Digitized by Google

The bill also alleges that, in devising and constructing the plough, Hewitt was only performing his duty as an employé of the corporation, and carrying out his contract with it; that he was doing only what he was hired and paid to do; that the result of his labors belonged to the corporation; that it became, in equity and good conscience, the true and rightful owner of the right to manufacture the plough; that, if there is any part thereof which is patentable, the patent belonged to the corporation as equitable assignee of Hewitt; and that he was and is bound, in equity and good conscience, to make an assignment of the patent to the corporation or to its trustees.

The bill also alleges, that, upon the dissolution of the corporation of Hapgood & Company, the stockholders thereof organized another corporation, under the laws of Illinois, under the name of the Hapgood Plough Company, one of the plaintiffs; that the Hapgood Plough Company succeeded to the business of the prior corporation, and became by assignment from it the owner of all the latter's assets, whether legal or equitable, including the rights in the patent issued to Hewitt, which such prior corporation had or was entitled to, whether legal or equitable, and its right to manufacture a sulky plough in accordance with the model plough made by Hewitt, including all the devices covered or claimed to be covered by the patent; and that all the rights in the premises which the prior corporation had have been fully transferred to and vested in the new corporation. The bill then alleges a refusal by Hewitt to assign the patent to the plaintiffs, and that he claims to hold it adversely to them.

The prayer of the bill is for a decree directing the defendant to make an assignment of the patent, or of such interest as he may have therein, and of all his rights thereunder, to the Hapgood Plough Company, assignee of Hapgood & Company, or to the trustees of Hapgood & Company, in trust for the Hapgood Plough Company, vesting the title to the patent, or to the defendant's rights thereunder, in the Hapgood Plough Company, or in said trustees in trust for that corporation, and that he be enjoined and restrained from maintaining any action at law or in equity for any infringement of the patent

Digitized by Google

y Hapgood & Company, or for the use by that corporation f any of the devices or improvements covered by the patent. The decision of the Circuit Court, 11 Bissell, 184, was laced on the ground (1) that Hewitt was not expressly reuired, by his contract, to exercise his inventive faculties for e benefit of his employer, and there was nothing in the bill om which it could be fairly inferred that he was required or xpected to do so; (2) that, whatever right the employer had the invention by the terms of Hewitt's contract of employent, was a naked license to make and sell the patented imrovement as a part of its business, which right, if it existed, as a mere personal one, and not transferable, and was exnguished with the dissolution of the corporation.

We are of opinion that the views taken of the case by the ircuit Court were correct. There is nothing set forth in the ill as to any agreement between the corporation and Hewitt, at the former was to have the title to his inventions or to ny patent that he might obtain for them. The utmost that an be made out of the allegations is, that the corporation was have a license or right to use the inventions in making loughs. It is not averred that anything passed between the arties as to a patent. We are not referred to any case which ustains the view, that, on such facts as are alleged in the bill, e title to the invention or to a patent for it passed. In *IcClurg* v. *Kingsland*, 1 How. 202, the facts were in some espects like those in the present case, but the decision only ent to the point that the facts justified the presumption of a cense to the employer to use the invention, as a defence by im to a suit for the infringement of the patent taken out by e employé.

The Circuit Court cases referred to do not support the laintiffs' suit. In *Continental Windmill Co.* v. *Empire Vindmill Co.*, 8 Blatchford, 295, there was an agreement that e employé should receive $500 for any patentable improvement he might make. In *Whiting* v. *Graves*, 3 Ban. & A. 222, was held that an employment to invent machinery for use a particular factory, would operate as a license to the emloyer to use the machinery invented, but would not confer

Digitized by Google

on the employer any legal title to the invention or to a patent for it. In *Wilkens* v. *Spafford*, 3 Ban. & A. 274, the contract was that the employer should have the exclusive benefit of the inventive faculties of the employé, and of such inventions as he should make during the term of service.

Whatever license resulted to the Missouri corporation, from the facts of the case, to use the invention, was one confined to that corporation, and not assignable by it. *Troy Iron & Nail Factory* v. *Corning*, 14 How. 193, 216; *Oliver* v. *Rumford Chemical Works*, 109 U. S. 75, 82. The Missouri corporation was dissolved. Its stockholders organized a new corporation under the laws of Illinois, which may naturally have succeeded to the business of the prior corporation, but the express averment of the bill is, that it took by assignment the rights it claims in this suit. Those rights, so far as any title to the invention or patent is concerned, never existed in the assignor. As to any implied license to the assignor, it could not pass to the assignee.

As to so much of the prayer of the bill as asks that Hewitt be enjoined from maintaining any action at law or in equity for any alleged infringement of the patent by the prior corporation, or for its use of any of the devices or improvements covered by the patent, which is all there is left of the prayer of the bill, any suit to be brought would not be a suit against the corporation, for it is dissolved; and could not be a suit in equity against its trustees, for they are not alleged to be using the invention. It could only be a suit at law against the trustees or the stockholders of the old corporation, for infringement by it while it existed. The theory of the bill is, that there is a perfect defence to such a suit. In such a case a court of equity, certainly a Circuit Court of the United States, will not interfere to enjoin even a pending suit at law, much less the bringing of one in the future. *Grand Chute* v. *Winegar*, 15 Wall. 373; 1 High on Injunctions, §§ 89 to 93, and cases there cited.

Decree affirmed.

Digitized by Google

STORY v. BLACK.

ERROR TO THE SUPREME COURT OF THE TERRITORY OF MONTANA.

Submitted November 11, 1886. — Decided November 15, 1886.

hen a jury is waived in a territorial court in the trial of an action at law, the case cannot be brought up for review by writ of error; but must, under the Act of April 7, 1874, c. 80, 18 Stat. 27, come, if at all, by appeal, as provided in that act.

This was an action to try title to real estate. After issue oined it came on for trial "before the court, a trial by jury aving been expressly waived by the parties." In the course f the trial plaintiff's counsel took several exceptions to evience offered on defendant's behalf, all of which were duly oted. The judge then, after hearing the evidence, made pecial findings of fact, and found conclusions of law thereon; nd plaintiff's counsel thereupon excepted to each finding of act, except one which was specified, and to each of the conlusions of law, on the ground that the same were defective nd did not cover the material issues in the action, and that he court erred in its conclusions of law upon the findings. Plaintiff's counsel also asked for certain specified findings, and noved for a new trial for reasons given in the motion; and, he motion being denied, excepted to the order denying it. On this record the case was taken on appeal to the Supreme Court of the Territory. The judgment below was there affirmed, and this writ of error was sued out to review that action of the Supreme Court of the Territory.

Mr. J. Hubley Ashton and *Mr. Nathaniel Wilson* for plaintiff in error.

Although a jury was waived in this case by the parties, and the issues of fact therein were tried by the court, under the authority of the Statute of Montana, the case was a case "of trial by jury" under that statute, and within the meaning of the second section of the Act of 1874, and, there-

Digitized by Google

fore, properly comes here by writ of error. The words, in the first section, "cases of trial by jury," receive interpretation from the proviso in the first section of the act, and they are substantially equivalent to the words, "cases cognizable at common law," as used in that proviso.

Certainly, it would seem, the Act of 1874 did not intend to provide for a writ of error in a case cognizable in equity, where, under the requirement of the Statute of the Territory, the issues of fact were tried by a jury; and yet, it would appear, as we respectfully suggest, that such a case must come here by writ of error, and not appeal, if the absolute and universal test as to the proper appellate proceeding, in a territorial case, be the fact of whether or not there was a trial by jury.

It would seem, as we desire to submit, under the Act of 1874, that regard must be had to the subject-matter of and the remedy sought in a case from the court of a Territory, whose legislature recognizes, as the Statute of Montana recognizes, the essential distinction between law and equity; and that if they are purely legal, and cognizable solely at law, and the Territorial Statute required the trial of the case by jury, unless the parties waived a jury trial, the case is one "of trial by jury," within the meaning of that phrase in the Act of 1874, although, in fact, a jury trial was waived and the issues of fact were tried by the court.

By the Montana Code of Civil Procedure, in actions for the recovery of specific real property, and other common law cases, a jury trial must be had unless expressly waived in the manner specified in the Statute, §§ 241, 269.

Mr. Edwin W. Toole and *Mr. Joseph K. Toole* for defendants in error.

Mr. Chief Justice Waite delivered the opinion of the court.

This is a writ of error to the Supreme Court of the Territory of Montana to bring up for review the judgment in a suit where there was not a trial by jury. Under the Act of April 7, 1874, c. 80, § 2, 18 Stat. 27, the case should have

Digitized by Google

been brought up by appeal, and the writ of error is therefore dismissed. *Hecht* v. *Boughton*, 105 U. S. 235; *United States* v. *Railroad Co.*, 105 U. S. 263; *Woolf* v. *Hamilton*, 108 U. S. 15. The question is no longer open in this court. The statutory rule is jurisdictional.

CONTINENTAL INSURANCE COMPANY *v.* RHOADS.

ERROR TO THE CIRCUIT COURT OF THE UNITED STATES FOR THE EASTERN DISTRICT OF PENNSYLVANIA.

Argued November 9, 10, 1886. — Decided November 29, 1886.

A declaration in an action at law in a Circuit Court of the United States by an administrator against an Insurance Company, which alleges that the intestate was a citizen of the State in which the action is brought, and that letters of administration were granted plaintiff in that State, and that the company is a citizen of another State, without any allegation respecting the citizenship of the administrator, fails to show a citizenship in the plaintiff to give the Circuit Court jurisdiction, and cannot be amended in that respect in this court: but the court below may, on the case being remanded, in its discretion, allow this to be done.

This was an action at law against the plaintiff in error, defendant below, brought by the defendant in error as administratrix of Maris Rhoads, deceased, to recover on a policy of life insurance. The allegations in the declaration, material to the point decided by the court, were the following:

"Ann Eliza Rhoads, administratrix, &c., of Maris Rhoads, late a citizen of the State of Pennsylvania, deceased, complains of the Continental Life Insurance Company of Hartford, Connecticut, a foreign corporation, incorporated under the laws of the State of Connecticut, and a citizen thereof, who has been summoned in this writ to answer the plaintiff in a plea of trespass on the case, &c., for that whereas heretofore, to wit, on the twenty-ninth day of August, A.D. 1877, and in the lifetime of the said Maris Rhoads, who is now deceased, and in the district aforesaid, the aforesaid corporation, defendant,

Digitized by Google

made and delivered to the said Maris Rhoads a certain policy of insurance, which the plaintiff now brings into court, and which is in the words and figures following, to wit: . . .

"And the plaintiff further saith that the said Maris Rhoads afterwards, to wit, on the second day of December, A.D. 1880, died, and that in his lifetime and down to the time of his death he, the said Maris Rhoads, performed and fulfilled and did not violate any of the conditions and agreements of the said policy of insurance, according to the true intent and meaning thereof, all of which the said company, defendant, had notice.

"And the plaintiff further says that afterwards, to wit, on the thirtieth day of December, A.D. 1880, letters of administration were duly granted upon the estate of the said Maris Rhoads, deceased, to the said Ann Eliza Rhoads by the register of wills of Delaware county, in the State of Pennsylvania, which said letters of administration the plaintiff now brings here into court." . . .

These were all the allegations respecting the citizenship of the parties. A trial was had, and verdict for plaintiff, and judgment on the verdict; and a bill of exceptions was allowed. Defendant sued out this writ of error, and among others, made the following assignments of error:

4. Because it does not affirmatively appear from the record that the court below had jurisdiction of the case.

5. Because it does not appear sufficiently from the record that the court below had jurisdiction of the case.

6. Because it appears from the record that the court below had no jurisdiction of the case.

The defendant in error offered to file in this court, as a basis for a motion to amend, the following affidavit entitled as of the cause in the court below:

STATE OF PENNSYLVANIA,
COUNTY OF DELAWARE, } ss:

Ann Eliza Rhoads, the above named plaintiff, being duly affirmed, says that she is the widow and administratrix of Maris Rhoads, who died on the second day of December, A.D. 1880. That at the time of his death she resided with him in

Digitized by Google

Springfield township, Delaware county, Pennsylvania, where she still resides; and that she was at the time of the commencement of the above suit or action, and still is, a citizen of the State of Pennsylvania.

Affirmed and subscribed February 8th, A.D. 1886, before me.

[SEAL] A. P. OTTEY, Notary Public.

ANN ELIZA RHOADS.

Mr. S. C. Perkins for plaintiff in error.

Mr. Robert T. Cornwell for defendant in error. *Mr. F. C. Hooton* was with him on the brief.

MR. CHIEF JUSTICE WAITE delivered the opinion of the court.

One of the errors assigned on this record is that the Circuit Court had no jurisdiction. It was settled at a very early day that the facts on which the jurisdiction of the Circuit Courts rest must, in some form, appear on the face of the record of all suits prosecuted before them. *Turner* v. *Bank of North America*, 4 Dall. 8; *Bushnell* v. *Kennedy*, 9 Wall. 387; *Hornthall* v. *Collector*, 9 Wall. 560; *Ex parte Smith*, 94 U. S. 455; *Robertson*, v. *Cease*, 97 U. S. 646; *Grace* v. *American Central Ins. Co.*, 109 U. S. 278, 283; *Börs* v. *Preston*, 111 U. S. 252, 255; *Mansfield, Coldwater and Lake Michigan Railway* v. *Swan*, 111 U. S. 379, 382; *Hancock* v. *Holbrook*, 112 U. S. 229. And it is error for a court to proceed without its jurisdiction is shown. *Grace* v. *American Central Insurance Co.*, *supra; Thayer* v. *Life Association*, 112 U. S. 717; *Mansfield, &c., Railway* v. *Swan, supra.*

It is conceded that the jurisdiction in this case depends alone on the citizenship of the parties, and that there is not in the declaration any averment in express terms of the citizenship of the plaintiff. It does appear that the defendant was, at the commencement of the suit, a citizen of Connecti-

Digitized by Google

cut, and that the intestate, Maris Rhoads, was at the time of his death a citizen of Pennsylvania, but there is nothing to show the citizenship of the plaintiff, and the jurisdiction depends on her citizenship, and not on that of her intestate. *Amory* v. *Amory*, 95 U. S. 186. It is true that the record does show that letters of administration were granted to her in Pennsylvania, but that does not make her a citizen of that State. It may be that by the law of Pennsylvania the personal representative of a deceased citizen of Pennsylvania is, in contemplation of law, resident within the State, and at all times amenable to the jurisdiction of the proper courts of that State, but that does not necessarily imply citizenship of the State. He must be there for the purposes of his administration, but that is all. And, besides, the jurisdiction must appear positively. It is not enough that it may be inferred argumentatively. *Brown* v. *Keene*, 8 Pet. 112; *Robertson* v. *Cease*, *supra*. If the plaintiff was actually a citizen of Pennsylvania when the suit was begun, the record cannot be amended here so as to show that fact, but the court below may, in its discretion, allow it to be done when the case gets back. *Morgan* v. *Gay*, 19 Wall. 81; *Robertson* v. *Cease*, *supra*.

It is not necessary to consider any of the other assignments of error.

The judgment of the Circuit Court is reversed and the cause remanded for further proceedings.

EAST TENNESSEE, VIRGINIA & GEORGIA RAILROAD *v.* GRAYSON.

APPEAL FROM THE CIRCUIT COURT OF THE UNITED STATES FOR THE NORTHERN DISTRICT OF ALABAMA.

Submitted November 8, 1886. — Decided November 29, 1886.

A, a citizen of Alabama, filed a bill in equity in a court of Alabama against the Memphis and Charleston Railroad, a Corporation of Tennessee, Alabama and Mississippi, and the East Tennessee, Virginia and Georgia

Digitized by Google

Railroad, a Corporation of Tennessee and of Georgia. The bill alleged that complainant was a stockholder in the Memphis and Charleston Company, that a lease of the road of that company had been made to the other company for a term of years not yet expired, that the lease was not within the corporate power of either company, and that an arrangement had been made between the two companies, and was about to be carried into effect, for the surrender and cancellation of the lease on the payment by the lessor of a large sum of money to the lessee, which was to be raised by the sale of a large amount of new stock at a very low rate; and it prayed for an injunction to restrain the lessee from operating the road, and the lessor from paying the sum of money or any sum for the cancellation, and from issuing the new stock. On the petition of the lessee the suit was removed to the Circuit Court of the United States on the ground that the lessee was a citizen of Tennessee, and the complainant a citizen of Alabama, and that there was a controversy wholly between citizens of different States, which could be fully determined between them. The Circuit Court, on motion, remanded the cause. This court, on appeal, affirms that judgment.

This was an appeal from the judgment of a Circuit Court, emanding a cause which had been removed from a State Court. This case is stated in the opinion of the court.

Mr. William M. Baxter for appellant.

Mr. Henry E. Davis, *Mr. F. P. Ward*, and *Mr. R. W. Walker* for appellee.

Mr. Chief Justice Waite delivered the opinion of the court.

This is an appeal from an order remanding a suit in equity which had been removed from the chancery court of the astern division of the State of Alabama. The bill was filed y John W. Grayson, a citizen of Alabama, and a stockholder f the Memphis and Charleston Railroad Company, "in his own ehalf, and in behalf of all other stockholders . . . who nay come in and contribute to the expenses," against the Memhis and Charleston Railroad Company, a corporation existing nder the laws of the States of Tennessee, Alabama, and Mississippi, and the East Tennessee, Virginia and Georgia Raiload Company, a corporation existing under the laws of Tenessee and Georgia. The bill was filed August 31, 1882, and

Digitized by Google

alleged that on the second of June, 1877, the Memphis and Charleston Company executed what purported to be a lease of its railroad and appurtenances to the East Tennessee, Virginia and Georgia Company for a period of twenty years from July 1, 1877; that this lease was modified in some particulars December 2, 1879; that neither the lease nor the modification were within the corporate power or authority of either of the parties thereto; that, notwithstanding this, the East Tennessee, Virginia and Georgia Company had taken possession of and was operating the leased railroad; that Grayson, the complainant, was not present, either in person or by proxy, at any meeting of the stockholders of the Memphis and Charleston Company, if any there ever had been, when the lease was authorized or approved; that he had never consented thereto, and his rights as a stockholder "are in nowise affected by any such action of a stockholders' meeting at which he was not present, in which he did not participate, and in which his stock was not represented — such action being *ultra vires* and without legal authority;" that at a meeting of the stockholders of the Memphis and Charleston Company, on the 22d of August, 1882, a resolution was adopted authorizing the directors to appoint a committee to meet the East Tennessee, Virginia and Georgia Company and arrange for a cancellation of the lease, it being understood that the last named company would surrender its rights as lessee on payment of $400,000; that the resolution was adopted under the influence of the belief that upon the payment of this amount the lease would be abrogated; that at the same meeting a further resolution was adopted authorizing the issue of five millions of dollars of additional stock, to be sold at eight cents on the dollar to raise the amount to be paid the East Tennessee, Virginia and Georgia Company, in case the proposed arrangement was carried out; that Grayson, the complainant, voted against both these resolutions; that, on a fair settlement of the accounts between the two companies for the operations of the East Tennessee, Virginia and Georgia Company during the time it had been in possession under the lease, a large sum would be found due to the Memphis and Charleston Company; and that the directors of the Memphis

Digitized by Google

nd Charleston Company will not, and Grayson, the complain-
nt, cannot, bring a suit in the name of the company to have
he lease set aside. The prayer of the bill is for a cancellation
f the lease, for an account, and for an injunction to restrain
he East Tennessee, Virginia and Georgia Company from
perating the road, and the Memphis and Charleston Company
rom paying $400,000 or any other sum for the cancellation of
he lease, and from issuing the new stock to raise the money
o make the payment.

On the 4th of September, 1882, the East Tennessee, Vir-
inia and Georgia Company filed a petition for the removal
f the suit to the Circuit Court of the United States, on the
round that the company is a citizen of Tennessee and Gray-
on a citizen of Alabama, and "there is a controversy which is
holly between citizens of different States, and which can be
lly determined between them, to wit, a controversy between
he said petitioner and the said John W. Grayson." The Cir-
uit Court, on motion, remanded the cause, and that order is
ow here for review.

We are unable to distinguish this case from that of *New
ersey Central Railroad* v. *Mills*, 113 U. S. 249. It is
rought by a stockholder of the Memphis and Charleston
ailroad Company, in behalf of himself and any other stock-
olders who will contribute to the expenses, to set aside a
ase made by that corporation to the East Tennessee, Vir-
inia and Georgia Railroad Company, in excess of its corpo-
ate powers, and to restrain the Memphis and Charleston
ompany from carrying into effect a resolution of its stock-
olders authorizing a settlement with the East Tennessee,
irginia and Georgia Company, by the payment of $400,000,
o secure a cancellation of the lease. The bill was filed by
ne of the minority stockholders nine days after the resolution
n favor of the settlement was passed, and one of its objects is
o defeat this action of the majority. Under these circum-
ances it is clear that the Memphis and Charleston Company
not a mere formal party, or a party in the same interest
ith Grayson, but is rightly and necessarily a defendant.
he corporation, as a corporation, has determined, by a vote

Digitized by Google

of its stockholders, to pay $400,000, which it proposes to raise by a ruinous sale of stock, to get rid of a lease that Grayson insists is void and ought to be annulled without any payment whatever, and the lessee brought to an account.

Neither is there a separate controversy in the case between the complainant and the East Tennessee, Virginia and Georgia Company. The principal purpose of the suit is to set aside the lease for want of authority to make it. For that purpose both the lessor and lessee are necessary parties. Grayson is not suing for the Memphis and Charleston Company, but for himself. It is true a decree in his favor may be for the advantage of the Memphis and Charleston Company, but he does not represent the company in its corporate capacity, and has no authority to do so. As a stockholder he seeks protection from the illegal acts of his own company as well as the other. According to the allegations of the bill, it may fairly be inferred that a majority of the stockholders of the Memphis and Charleston Company have combined with the East Tennessee, Virginia and Georgia Company to sacrifice the rights of the minority, and this suit is in behalf of the minority to protect themselves against this unlawful and fraudulent combination. Left to themselves, the two companies will settle on a basis that will be ruinous to the interests of Grayson and those in like situation with himself. This he seeks to prevent.

In the argument it is suggested that this case differs from that of the *New Jersey Central Railroad* v. *Mills* in the fact that in that case the two corporations joined in an answer insisting on the validity of the lease, and in this nothing of the kind has been done. But here the allegations of the bill, which, for the purposes of the present inquiry, must be considered as confessed, are to the effect that the two companies are acting in harmony upon the question of validity, and that, unless restrained, the Memphis and Charleston Company will make a settlement which will be greatly to the injury of its minority stockholders, of whom this complainant is one. This is certainly the equivalent of the joint answer in the other case.

The order remanding the case is affirmed.

Digitized by Google

CUNARD STEAMSHIP COMPANY *v.* CAREY.

ERROR TO THE CIRCUIT COURT OF THE UNITED STATES FOR THE SOUTHERN DISTRICT OF NEW YORK.

Argued November 8, 1886. — Decided November 15, 1886.

While A, a longshoreman in the employ of a Steamship Company, was engaged in his regular work, a tub filled with coal fell upon him and injured him seriously. The fall was caused by the breaking of a rope which suspended the tub. A sued the Company to recover damages, claiming that the injury was caused by the negligence of B in not providing a proper rope to hold the tub after notice of the insufficiency and weakness of the one which broke, and that B was an agent of the Company, for whose acts or omissions it was responsible. The Company defended, setting up (1) contributory negligence in A; and (2) that B was a fellow-servant of A, for whose acts or omissions the Company was not responsible. The judge who presided at the trial refused to direct a verdict for the Company, and referred the question of contributory negligence to the jury; and also referred to them the question as to what the authority of B was. There were various exceptions by the Company to the charge, and to refusals to charge. A verdict was rendered in favor of A, and judgment entered on the verdict. This court affirms that judgment by a divided court.

Case to recover for personal injuries received by plaintiff below (defendant in error) while in the service of defendant, and in the performance of his ordinary duties. The evidence was sent up with the exceptions. There was conflicting testimony on some points, but the following material facts appeared to be conceded as established, in the briefs both of plaintiff's and defendant's counsel.

Carey, the plaintiff below, had been in the employ of the Steamship Company for two years as longshoreman, and on the evening of November 3d, 1880, was sent, with others, into the hold of its steamship Batavia to assist in shifting coal from that place to the steerage deck above. The particular work assigned to him was that of hooking full tubs to the hoisting apparatus, for the purpose of having them raised, and of unhooking empty tubs when they had descended; and his duty required him to be stationed at the edge of the hatch, on the

Digitized by Google

in shore side of the ship, or that nearest the dock, where all of the coal was which the men were engaged in shifting.

Two falls were in use on the hoisting apparatus, each operating a tub, one of which ascended while the other descended; and a man named Henretty was stationed in the hold, on the opposite side of the hatch to Carey, whose duties were similar to those of Carey. Each attended to the tub ascending and descending on his side of the hatch.

The rope in the falls was a spliced rope, and was part of the usual hoisting apparatus operated by steam power, and ran through various blocks attached to a derrick to a drum worked by an engine on a scow at the ship's side.

The superintendent of the dock, Storey, was not present at any time on that evening. The next person in rank to him was Patrick Craven. His relations with the company were thus described by himself when testifying as a witness in the case for defendant. "*Q.* What were your duties on that dock? *A.* To take on men and put them to work and discharge the men when I got done with them. *Q.* Did you hire men? *A.* Yes, sir; I hired all the men. *Q.* What were your duties with regard to the apparatus on the dock? *A.* To see that everything was all right for the men." About five o'clock that afternoon Craven directed Robert Graham (who was employed by the Company to take charge of rigging up the ships) to rig the falls for the purpose of hoisting up coal. Graham selected a fall from Company's storehouse, and work began.

About eight o'clock Craven, not feeling well, quit work, and at nine o'clock he left the dock. The apparatus for hoisting worked well up to the time he quit work, and when he left the dock he had had no information that anything was wrong. When he left, he left Gerraghty, the coal foreman, in charge, also an employé of the Company.

Gerraghty's relations with the Company were thus described by Craven in his testimony. "*Q.* In your absence who takes your place in discharging men if it is necessary, seeing to the condition of the falls and things on the dock? *A.* Christy Gerraghty would take the discharging and hiring of men if I was to be absent, and Robert Graham would take charge of

Digitized by Google

the falls. *Q.* Suppose you were both absent? *A.* I couldn't tell who it would be then. *Plaintiff's Counsel:* I understand that in the absence of Graham and Craven, Gerraghty would have full charge? *The Witness:* Yes, sir; Christ. Gerraghty would have charge then. *Q.* Both of the men and of the gear? (No answer.) *Defendant's Counsel:* *Q.* Did Christy Gerraghty have any power to hire and discharge men independently of you? *A.* No, sir. *Q.* No matter whether you were there or not? *A.* Well, if I wasn't there, he would have the power."

Gerraghty was called as a witness on defendant's behalf, and on this point testified as follows: "In chief — *Q.* As boss of the coal gang, what were your duties on the Cunard dock in November, 1880? *A.* To look after the men and get coal removed from one hold into the other. *Q.* Did you have anything to do with the apparatus that was used in such work? *A.* No, sir. *Q.* Did you have anything to do with buying it? *A.* No, sir. *Q.* Or keeping it in order? *A.* No, sir." "*Cross-Q.* Having charge of the gang it would be your duty to go around and see that the men were doing their duty? *A.* Yes, sir. *Q.* And see that the apparatus was all right? *A.* That I very seldom looked after — the apparatus. *Q.* You did that night? *A.* Not until my attention was called to it. *Q.* What did you go down on the scow for? *A.* I was called down there. *Q.* Who called you? *A.* I couldn't say. *Q.* Did the man who called you state what was required of you; what was wanted of you down there? *A.* I was down in the ship's hold at the time, and some of the men overhead that was wheeling or dumping, I don't know which, perhaps one of the men that might be picking up slack coal, told me I was wanted down on the scow to look at the fall. I got up and went down on the scow then. *Q.* You do remember now a little bit what it was that called you out of the hold? *A.* Yes, sir; when it comes to that I do. *Q.* You went over on the scow? *A.* Yes, sir. *Q.* Who did you see when you first got there? *A.* I couldn't exactly say which of the three men I first seen when I got in there. *Q.* Who first spoke to you? *A.* I think it was O'Brien; I am

Digitized by Google

not positive of that either; whether it was Mr. O'Brien or Jo. Redmond. *Q.* Do you recollect, without stating, what it was that was first said to you when you first got down on the scow? *A.* I think the first thing that was said to me was to look at this fall. *Q.* And you looked at it, did you? *A.* Yes, sir. *Q.* What did you do that for? *A.* To see what was the matter with it, of course. *Q.* You thought it was your duty to, didn't you? *A.* I considered it was my duty then to do it when I was sent for. *Q.* There was nobody else there that you knew of whose duty it would be to look after that fall at that time but yourself, was there? *A.* No, sir. *Q.* What part of the fall did O'Brien tell you to look at? *A.* The part which he told me to look at was on the outside of the scow at the time, and he hauled it in, and I looked at it then, and I saw the turns were worked out of the fall."

O'Brien, also an employé of the Company, was stationed that night in the scow alongside the ship. He was a witness for plaintiff, and thus described his relations with the other employés. "*Q.* How long had you been in the employ of the Cunard Steamship Company? *A.* Somewhere over a year; about a year, or somewhere about that. *Q.* During that time who was your foreman, your immediate foreman; did you have the same one at every job or different ones? *A.* The same as we had that night. *Q.* Generally speaking, did you always have the same foreman? *A.* We had Mr. Craven. *Q.* Who was he? *A.* He was the foreman and stevedore on the dock—all over. . . . *Q.* Who gave you directions from time to time in your avocation there? *A.* Sometimes Mr. Craven would give us directions, and sometimes Mr. Gerraghty would give us directions; sometimes another foreman that is there used to give us directions, owing to what work we were at. *Q.* Did Mr. Storey ever give you directions? *A.* Sometimes, yes, sir; very seldom, because he used to deliver it to his foreman. *Q.* Sometimes you got directions from Mr. Craven, I understand you? *A.* Yes, sir. *Q.* And who else? *A.* Mr. Gerraghty and another foreman that used to be there used to give us directions. *Q.* Was this other foreman there on the third of November? *A.* He was in the day there; yes, sir. *Q.*

Digitized by Google

ou mean this other foreman you have mentioned whose name u have not given? *A.* Was he there that day? *Q.* Yes, sir. He was there in the daytime, but not that night. . . . *y the Court:* *Q.* Supposing an accident had happened to the um, that it had been deranged, in your natural course of siness what would you do? *A.* I would have to notify my reman. *Plaintiff's Counsel:* *Q.* And who was that? *A.* at was Christy Gerraghty; we acknowledge him as such ways. *Q.* You received your orders directly from him? That night, yes, sir. *Q.* And all your communications to superior officer were to him? *A.* That night, yes, sir. *Q.* nd that, I understand you, was the usual course of business? Yes, sir. *Recross:* *Q.* Do you mean to say that you always plied to Mr. Gerraghty? *A.* No, sir. *Q.* You applied to hers there? *A.* To other foreman; he is superior and he is der sometimes; according to what we are doing."

About eight o'clock on that evening, O'Brien's attention was tracted to the worn condition of the rope. When Gerraghty me down upon the scow, O'Brien spoke to him about it. erraghty directed him to look out for the rope, and if the rns should come out again, to take it off and put them in. Brien continued to operate the rope without doing anything it. At about half-past nine Gerraghty's attention was again lled to it. He then took the fall off the drum, and put some rns in it, threw that part of it into water to steep it; and en work was resumed with it. Shortly afterwards the rope oke and the tub of coal it was hoisting fell upon Carey, who as in the hatchway beneath, and injured him seriously. He d been directed not to stand there while a load was ascend-g, because there was danger from falling lumps of coal which ight be jostled from the tubs in their ascent.

After the evidence was in, defendant's counsel moved the urt to direct a verdict for the defendant, on the grounds—rst, contributory negligence of the plaintiff; second, that the idence failed to establish negligence on the part of the de-ndant; and, third, that the injury was caused solely by the egligence of a fellow-servant of the plaintiff. The court enied the motion and defendant's counsel excepted.

Digitized by Google

Defendant's counsel then asked the court to make the following several instructions, each of which was refused, and to each of which refusal an exception was duly taken. The refusals as to the third and sixth requests were that the judge would not instruct the jury in the language requested, or otherwise than as the request was included in the language of the charge. As to the other requests it was absolute.

"First. That in the management and operation of the hoisting apparatus Gerraghty and O'Brien were the fellow servants of the plaintiff."

"Second. That if there was negligence on the part of O'Brien, and also of Gerraghty, in the operation of the hoisting apparatus and the use of the fall which parted, and the plaintiff's injury resulted from such negligence, or that of either of them, they being his fellow servants, he cannot recover against the defendant, whether the plaintiff was guilty of contributory negligence or not."

"Third. That O'Brien was a fellow servant of the plaintiff, and if the injury was occasioned solely by his negligence, the plaintiff cannot recover."

"Fourth. That Christy Gerraghty was, in the operation of the apparatus, a fellow servant of the plaintiff, and if the injury was occasioned solely by his carelessness in operating the apparatus, the plaintiff cannot recover."

"Fifth. That if the fall was sufficient in itself and adequate for the work when delivered to the workmen, and the injury occurred through their negligent use of it, the plaintiff cannot recover."

"Sixth. That the duty of the company to its employés is discharged when its agents, whose business it is to supply the apparatus, exercise due care in the purchase thereof, and keeping it in a reasonably safe condition for use."

"Seventh. That if when Gerraghty had put the turns in the rope and wet it, it was then in an apparently good condition and fit for use, provided it was kept from becoming untwisted, and if Gerraghty directed O'Brien to keep watch of the rope, and if the turns came out again to stop and put them in again; and if thereafter the splice of the rope drew out in consequence

Digitized by Google

f the turns coming out again, O'Brien having failed to see hat they were so coming out, and by reason of such drawing f the splice the plaintiff received his injury, such injury was he result of negligence of a fellow servant, and the plaintiff annot recover."

"Eighth. That if the plaintiff had been warned by Craven ot to be under the hatch when a draught was coming up, nd if the plaintiff was under the hatch when the tub in ques-ion fell on him, he cannot recover."

The following are the material parts of the charge of the ourt, the parts excepted to being in italics and numbered (1), 2), &c.

"The first point in the case is whether Carey contributed to he injury by any negligence of his own; for if he, by his own egligence, directly contributed to the injury, although it was aused by the negligence of another, he cannot recover. If e could, by the exercise of ordinary care on his part, have voided the injury he cannot recover.

"I am requested to charge you, and do so, that if the plaintiff hat is, Carey) in his work failed to exercise the care and aution which a prudent man would exercise under the same ircumstances, and but for which failure he would not have een injured, he cannot recover, notwithstanding the defend-nt was negligent.

"The negligence which it is claimed existed on his part was he standing under the hatchway when the tubs were ascend-ng and descending, and which it is said he had been warned ot to do, because it was a dangerous place. (1) *I do not nderstand that the defendant's superintendent, Mr. Craven, arned the workmen not to stand in the hatchway because there as danger of falling tubs, but because there was danger of alling lumps of coal, which might be jostled from the tubs n their ascent;* and the plaintiff insists that he was not nder the hatchway, but on the edge of it, and just in the lace where the exigencies of his work compelled him to e, and in a safe place, unless it should become unsafe by he negligence of the defendant, which the caution of the laintiff was powerless to guard against.

Digitized by Google

"If the plaintiff is sent to work in a place where serious calamities might naturally be expected to arise, and where dangerous accidents might be naturally expected to happen, then he is called upon either not to go there or to exercise extra precaution, or else to bear unrewarded the consequences. (2) *But if he was in a safe place from any such injury unless that injury should be effected by the unforeseen and not naturally to be anticipated negligence of the defendant, then he is called upon to exercise only ordinary care.* And the plaintiff claims from the testimony of Christopher Gerraghty that the plaintiff was in no fault in standing where he did, the point being that at this time of the execution of the work, when the coal had almost all been taken from the hold, as the tub descended it became necessary to guide it to the workmen who were shovelling in the wing of the hold, and that Carey reached out his hand or stepped forward under the hatchway, took hold of the tub by the edge, and guided it to or attempted to guide it to where the shovellers were at work.

* * * * * *

"The next and important point in the case is whether the injury was caused by the negligence of the defendant in providing an unsafe rope or in using the rope after it had become manifestly unsafe, by its agents, to whom the duty of selecting safe appliances and controlling the use of and rejecting unsafe ones had been intrusted.

"As a general rule, the law does not impose upon employers a liability for injuries to servants which happen by the negligence of co-servants engaged in the common employment in which the injured party is engaged, although the negligent servant may be of a grade superior to that of the injured person, or his foreman in the common business.

"But the law also requires that employers shall personally exercise ordinary care in regard to the safety of the machinery and tackle which the workmen must use, and are responsible when an injury happens by the use of unsafe machinery, which the employer knew, or by the exercise of ordinary care would have known, was unsafe, and the employé did not know of the

Digitized by Google

fect from his inability to examine or know about the achinery.

"The employer is not an insurer or guarantor of safety; he *is required to exercise the care which prudence requires in oviding the servants with machinery reasonably and adeately safe for use by the latter.* And the employer is not und to furnish the safest or best apparatus for the use of his orkmen, nor apparatus of any particular character, nor is he liged to maintain it up to its maximum strength. But, as I d you, he is obliged to exercise the care which prudence quires in providing the servant with machinery reasonably d adequately safe for use by the latter; and (4) *when the ployer is a corporation, which acts through agents, it is ponsible for the negligence of those agents who are intrusted th the duty of selecting the machinery and of exercising, after s selected, a controlling and governing supervision and rejecn when the selected machinery becomes unsafe, and they know, ought, in the exercise of ordinary care to know, of its unfety.*

'*For example, in the case at bar it is manifest that Mr. Craven, o says that he was the manager of the defendant's coal business that dock, with the power of hiring and discharging men, and th the duty of seeing that the falls and appliances of this racter upon the dock were right, is an agent of the character ich I have described.*

* * * * * *

'It may, furthermore, in my opinion, be considered as a fact t the rope was a spliced rope, and that the injury happened the untwisting and drawing apart of the portion of the rope ich was spliced. In my opinion, gentlemen, it is so manitly the preponderance of the evidence that this was a spliced e, and that the injury happened by the parting of the porn which was spliced, that I do not think it is desirable to ance the testimony before you upon that point.

'The plaintiff takes two positions: First, that the rope was afe when selected from the storeroom; secondly, that if e when selected, it became thereafter unsafe, and was care-

Digitized by Google

lessly permitted by Gerraghty to remain in a dangerous position.

* * * * * *

"I conceive that the important feature in the case is the one to which I am now coming, and that is: That the plaintiff says that if the rope was a good rope in the first place it soon became unsafe, and that its unsafety was known, or ought to have been known, by the agent, Gerraghty, to whom, in the absence of Craven, was intrusted the governing and controlling, supervising and rejection of unsafe machinery. . . . In examining this point, it is necessary to ascertain what Gerraghty's authority was.

* * * * * *

"The only information that we have as to Gerraghty's powers in the absence of Craven, comes from Craven and from Gerraghty himself. In Craven's presence Gerraghty is a mere foreman, with no power of discharging men or rejecting machinery. That is obvious. But what is he in Craven's absence? Craven says: "In the absence of myself and Storey, Gerraghty would have the right to hire and discharge men and look after the falls and things on the dock." Gerraghty says: "If I had thought it was necessary to put in a new rope I should have done it." (5) *That is the only testimony upon the subject, and therefore, gentlemen, there is no need of your balancing testimony, but simply to find out, from what these two persons say, what the authority of Gerraghty was.* Well, now assuming, to use a terse expression, that he "stood in the shoes" of Craven, and that Craven was absent, let us go forward and find out what his conduct was — negligent or otherwise. If, gentlemen, he was no more than he was when Craven was present, then his knowledge is not the knowledge of the company.

* * * * * *

"Now, gentlemen, the plaintiff says it is manifest, from the testimony of O'Brien and Redmond, that the rope was in bad condition, and was in danger of untwisting, and that Gerraghty did not appreciate the danger, and was satisfied with simply twisting the turns, replacing the rope, and going

Digitized by Google

way; that the calamity which followed showed that the pe was in a dangerous condition by reason of untwisting or bility to untwist; and, next, that if Gerraghty's testimony true, and he left the rope, simply saying to O'Brien if it come untwisted put the turns in, and did not return to atch it, and the calamity happened, that is Gerraghty's neg-ct; that the sphere of Gerraghty's duties that evening was narrow one; that he had only to occupy himself on the ow and on the steerage deck and in the hold of the eamer; that this was not the case of an agent who is com-lled to go away to a distance and to leave the work in arge of some one else; that the important duty of the hour as to see that the rope did not untwist, and that when he ent away upon the vessel and did not return, content to trust the matter to an ordinary workman, and the calamity ppened through the workman's neglect, it is the fault of erraghty, because he had no business that night to abandon e oversight of the rope in the condition in which it was hen he saw it.

"The defendant says, on the other hand, that untwisting of liced ropes is a common occurrence in the course of this siness; that there is no danger from untwisting if precau-ons are taken to retwist, and that when Gerraghty told 'Brien to look out for the rope and retwist it, he had trusted a simple matter to O'Brien, which did not demand e exercise of much thought, and that Gerraghty had then one all that was his duty to do.

"These are the two theories or sets of arguments which the unsel present to you, and (6) *if you think that the rope was a good condition when it went upon the fall and thereafter came in a bad condition, which Gerraghty, then being in the oes of Craven, and, in the absence of Craven, knew, and hich he ought to have attended to himself and which he did t attend to, and the accident happened in consequence of his gligence, then the plaintiff has made out his case.* (7) *If, on the her hand, you think that Gerraghty did all that was his duty do, and that this was a simple matter and a matter which quired no care and which it was a safe thing to intrust to the*

Digitized by Google

hands of O'Brien, if he did intrust it to his hands, then another conclusion will naturally follow — that is, that he was not guilty of negligence."

In connection with exception (1) defendant's counsel requested the judge further to instruct the jury that "it was immaterial what the danger was, if the direction was that they were not to stand under the hatch." The judge refused to so charge, and counsel excepted.

Exception (3) was stated to have "reference solely to the word 'adequately' in said portion of said charge."

Exception (4) was taken "to the portion of the charge wherein the judge instructed the jury that 'Craven was an agent of the defendant, intrusted with the duty of selecting the machinery, and of exercising, after it is selected, a controlling and governing supervision, and rejection when the selected machinery becomes unsafe, and knew, or ought, in the exercise of ordinary care, to know of its unsafety.'"

Counsel for defendant further requested the judge to charge the jury: That the jury cannot draw the conclusion that from the appearance of the rope when O'Brien noticed it, it was insecure at the time when it was furnished, and that the plaintiff's claim in that respect is unfounded. But the judge refused to so charge the jury, to which refusal counsel for defendant excepted.

The jury returned a verdict against the Company for $15,000. Judgment was entered on the verdict, to review which this writ of error was sued out.

Mr. Frank D. Sturges and *Mr. R. D. Benedict* for plaintiff in error.

I. It was the duty of the court to direct the jury to return a verdict for the defendant on the ground that the plaintiff was guilty of contributory negligence. *Railroad Co.* v. *Jones*, 95 U. S. 439; *Schofield* v. *Chicago, &c., Railroad*, 114 U. S. 615; *Pleasants* v. *Fant*, 22 Wall. 116; *Randall* v. *Baltimore & Ohio Railroad*, 109 U. S. 478; *Shanny* v. *Androscoggin Mills*, 66 Maine, 420; *Memphis, &c., Railroad* v. *Thomas*, 51 Missis-

Digitized by Google

ppi, 637; *Lyon* v. *Detroit, &c., Railroad*, 31 Mich. 429; *Brown* *Byroads*, 47 Ind. 435; *Felch* v. *Allen*, 98 Mass. 572; *Kre-nowski* v. *Northern Pacific Railroad*, 18 Fed. Rep. 229, 235; *nglish* v. *Chicago, &c., Railroad*, 24 Fed. Rep. 906, 910; *Cun-ingham* v. *Chicago, &c., Railroad*, 5 McCrary, 465, 472.

II. The court should also have directed a verdict for the efendant because the evidence failed to establish negligence the part of the defendant. *Hough* v. *Railway Co.*, 100 . S. 213; *Baker* v. *Allegheny Railroad*, 95 Penn. St. 211; *Iarsh* v. *Chickering*, 101 N. Y. 393, 400; *Armour* v. *Hahn*, 11 U. S. 313.

III. The court should have directed a verdict for the de-ndant on the ground that the injury was occasioned through e negligence of a fellow-servant, for which the defendant is ot liable. *Chicago, &c., Railway* v. *Ross*, 112 U. S. 377; *uckley* v. *Gould & Curry Mining Co.*, 14 Fed. Rep. 833, nd note; *Wood* v. *New Bedford Coal Co.*, 121 Mass. 252; *rown* v. *The Winona, &c., Railroad*, 27 Minn. 162; *Hoth* v. *eters*, 55 Wis. 405; *Keystone Bridge* v. *Newbury*, 96 Penn. . 246; *McDermott* v. *Boston*, 133 Mass. 349; *McDonald* v. *agle, &c., M'fg Co.*, 67 Georgia, 761; *Yager* v. *Receivers*, 4 ughes, 192; *Quinn* v. *The New Jersey Lighterage Co.*, 23 ed. Rep. 363; *Hough* v. *Railway Co., supra. Crispin* v. *abbitt*, 81 N. Y. 516; *Peterson* v. *The White Breast Coal o.*, 50 Iowa, 673; *Mullen* v. *Steamship Co.*, 9 Philadelphia, 5; *Lawler* v. *Androscoggin Railroad*, 62 Maine, 463; *Collins* *Steinhart*, 51 Cal. 116; *Marshall* v. *Schricker*, 63 Missouri, 08.

Mr. Hermon H. Shook (*Mr. William C. Trull* was with m on the brief) for defendant in error.

I. Carey was guilty of no contributory negligence. The w on this point was correctly stated by the court below in charge. *Hough* v. *Railway Co.*, 100 U. S. 213; *Railroad o.* v. *Jones*, 95 U.S. 439; *Goodfellow* v. *Boston, &c., Railroad*, 96 Mass. 461; *Quirk* v. *Holt*, 99 Mass. 164; *Mayo* v. *Boston* *Maine Railroad*, 104 Mass. 137; *Wheeloch* v. *Boston & Al-*

Digitized by Google

bany Railroad, 105 Mass. 203; *Bevey* v. *Central Railway*, 40 Iowa, 564; *Brydon* v. *Stewart*, 2 Macqueen, 30; *Northern Pacific Railroad* v. *Herbert*, 116 U. S. 642, 656; *Lock* v. *Sioux City &c.* v. *Railroad*, 46 Iowa, 109; *Gates* v. *Railroad*, 39 Iowa, 45; *Wabash Railway* v. *McDaniels*, 107 U. S. 454.

II. This accident comes within the well settled rule that the very nature of an accident may of itself, and through the presumptions it carries, supply the requisite proof of negligence. In support of this rule see Wharton on Negligence, § 441; Shearman and Redfield on Negligence, § 13; *Stokes* v. *Saltonstall*, 13 Pet. 181; *Transportation Co.* v. *Downer*, 11 Wall. 129; *Russell M'fg Co.* v. *Steamboat Co.*, 50 N. Y. 121; *Wyckoff* v. *Ferry Co.*, 52 N. Y. 32, 36; *Platt* v. *Hibbard*, 7 Cow. 497, 500, 501; *Mullen* v. *St. John*, 57 N. Y. 567; *Byrne* v. *Boadle*, 2 H. & C. 722; *Scott* v. *Dock Co.*, 3 H. & C. 596; *Feital* v. *Middlesex Railroad*, 109 Mass. 398; *McMahon* v. *Davidson*, 12 Minn. 357; *Atchison, &c., Railroad* v. *Bales*, 16 Kansas, 252; *Kendall* v. *Boston*, 118 Mass. 234; *McKee* v. *Bidwell*, 74 Penn. St. 218; *Devlin* v. *Gallagher*, 6 Daly, 494; *Cornell* v. *Railroad*, 38 Iowa, 120.

It is contended that it was the duty of O'Brien, the man stationed at the drum, to watch the rope and see that the turns did not come out, or if they did, to put them in again. Conceding, for the purpose of the argument, that such was the case, then we contend that he represented the master, as it was the master's duty to keep the rope in repair, a duty which could not be delegated to any servant of any rank or grade so as to exonerate the master. *Northern Pacific Railroad* v. *Herbert*, 116 U. S. 642; *Shanny* v. *Androscoggin Mills*, 66 Maine, 420; *Fuller* v. *Jewett*, 80 N. Y. 46; *Sheehan* v. *Railroad*, 91 N. Y. 334.

Where the master furnishes defective or inadequate machinery for use in the prosecution of his business, he is not excused by the negligence of a servant in using the machinery, from liability to a co-servant, which could not have happened had the machinery been suitable for the use to which it was applied. *Grand Trunk Railway* v. *Cumming*, 106 U. S. 700; *Cone* v. *Railroad*, 81 N. Y. 206; *Ellis* v. *Railroad*, 95 N. Y. 546; *Stringham* v. *Stewart*, 100 N. Y. 516.

Digitized by Google

Statement of Facts.

Mr. Chief Justice Waite announced that the judgment of he court below was

Affirmed by a Divided Court.

NEWHALL v. LE BRETON.

PPEAL FROM THE CIRCUIT COURT OF THE UNITED STATES FOR THE DISTRICT OF CALIFORNIA.

Argued November 2, 1886. — Decided November 29, 1886.

he evidence in this case, if admissible, establishes as a fact that the defendant was entitled to reimburse himself in full out of the trust estate before satisfying the demand of the plaintiff.

This action was commenced in the Superior Court of the tate of California for the city and county of San Francisco, nd removed thence to the Circuit Court of the United States. 'he material allegations in the complaint were the following:

"The plaintiff complains of the defendants and shows that n or about the first day of October, A.D. 1870, Juana M. Estuillo, José Ramon Estudillo, José Antonio Estudillo, José Vicente Estudillo, Luis D. Estudillo, Jesus Maria Estudillo, Magalena E. Nugent, and John Nugent were indebted to the efendant, Le Roy, in the sum of three hundred and ninety even thousand eight hundred and forty nine dollars ($397,-49.00), and the said parties were indebted to W. H. Patterson n the sum of thirteen thousand dollars ($13,000.00), and to . M. Wilson and A. P. Crittenden in the sum of thirteen housand dollars ($13,000), and to John B. Felton in the um of twenty three thousand dollars ($23,000.00), making in ll the sum of forty nine thousand dollars ($49,000.00), and the aid forty nine thousand dollars added to the said sum due the efendant, Le Roy, made the sum of four hundred and forty six housand eight hundred and forty nine dollars ($446,849.00), old coin of the United States, and the said Estudillos and Nuents agreed on said day to give to defendant, Le Roy, a deed

Digitized by Google

for certain tracts or parcels of land and other property, and to pay to the parties to whom they were indebted the said sums, with interest thereon at one and a quarter per cent. per month until paid, and to give a deed of trust for certain property to secure the payment thereof to the defendant, Le Roy; and the plaintiff further shows that, in conformity with said agreement, the said parties did execute and deliver to the defendant, Theodore Le Roy, a deed, as follows."

The deed, after reciting that the party of the first part was indebted to the party of the second part in the sum of $446,849, and after granting and conveying the described tracts, provided for several trusts, among which were the following:

"Third. To sell the same or any parts or parcels thereof for cash or for part cash and on credit at public or private sale, with or without notice to the said parties of the first part, it being understood that said Le Roy may sell, discount, and dispose of all or any notes, mortgages, or securities taken for deferred payments, at his discretion; also to lease the same in parcels or as a whole.

"Fourth. To pay off the said indebtedness hereinabove specified, with the interest thereon, and all sums which may hereafter be advanced by the said party of the second part to the said parties of the first part, or any or either of them, or at the request of any or either of them; also all taxes, liens, or other incumbrances, costs of lawsuits, and counsel fees, and other expenses of litigation spent in and about the protection of the title of the said property, it being understood that all advances made by the said party of the second part to the said parties of the first part, or any or either of them, shall bear interest from the date of the advance at the rate of one and one quarter per cent. per month.

"Fifth. To retain as commissions two and one half per cent. of the gross amounts of all sales made by the said party of the second part."

"Eighth. The said party of the second part shall receive commissions on all sales at the rate of two and one half per centum on the dollar, such commissions, however, not to be deducted or charged until all payments above mentioned are made."

Digitized by Google

Statement of Facts.

The complaint then alleged that the amounts due Patterson, Vilson, Crittenden, and Felton were included in the $446,849; hat Le Roy by accepting the deed became a trustee for them; hat defendant entered into possession of the property; that udgment had been rendered for a sale of the trust estate to atisfy the trust debts; that the property had been sold and a art of it purchased by defendant; that Patterson, Wilson, and 'rittenden had assigned their interests to plaintiff; that plaintiff ad demanded of defendant an account and settlement, and a onveyance of a portion of the property, or a payment of he amount due him; and that defendant had refused to convey o him or to recognize his rights. The prayer of the bill was that the defendant may be compelled to account for all sums eceived under the said deed of trust, and that he may be ecreed to hold all land purchased by him in trust for the laintiff, and that he be decreed to convey to plaintiff his just roportion thereof, and for such other and further relief as may e necessary, and costs of suit."

The answer admitted the execution and delivery of the deed; enied that any amount due Patterson, Wilson, Crittenden, and 'elton, or either of them, was included in the $446,849; enied that defendant was a trustee for either of them; denied ntry into any except a portion of the property, and averred hat the rest was held adversely; admitted suit, judgment, and ale, and that defendant had become a purchaser of a portion, ut not of all the tracts alleged in complaint; denied knowldge of the assignments to plaintiff; admitted demand for acount and refusal, and then made the following averment:

"When the trust deed was drawn, the said sum of forty nine housand dollars was included in the sum secured by said trust eed, which was to be paid only after this defendant should e reimbursed the whole amount due and to become due him or the principal then due at the date of the trust deed, with he interest thereon and all subsequent advances and expenses ith the interest thereon, and the said forty nine thousand ollars was not agreed by any one to be paid in any other way r in any other event, and it was because of this arrangement hat while it was provided in the said trust deed, in the fifth

Digitized by Google

article thereof, that this defendant should be entitled 'to retain as commission two and one half per cent. on the gross amount of all sales made by the said party of the second part' (this defendant), it was provided in the eighth article that the said commissions should not be deducted or charged until all payments above mentioned are made, it being intended thereby to provide that the said forty nine thousand dollars and interest should be paid after the amount due to this defendant for principal, advances, expenses, and interest thereon were paid, and before any commissions were paid to him. And afterwards, on or about the 27th day of September, 1871, the said John B. Felton brought to this defendant the draft of a letter which he desired to have written, addressed and signed by him in duplicate, one whereof was to be delivered and the other to be retained by this defendant, with a statement underwritten, signed by said Felton, certifying to its correctness. And this defendant had the said letter written in duplicate and addressed to the said J. B. Felton, S. M. Wilson, and W. H. Patterson, and signed by this defendant, and delivered the same to said John B. Felton, and one of them he retained, and to the other of them he, in his own hand, added a statement of its correctness, dated and signed by him and returned to this defendant, and which he has ever since retained as the evidence of the agreement existing in respect to said forty nine thousand dollars, and is in the words and figures following:

'San Francisco, September 27th, 1871.

'To Messrs. J. B. Felton, S. M. Wilson, and W. H. Patterson.

'Gentlemen: I hereby certify that you are entitled to the following sums payable out of a certain deed of trust made to me the first day of October, A.D. 1870, by Juana M. Estudillo, José Ramon Estudillo, José Antonio Estudillo, José Vicente Estudillo, Luis D. Estudillo, Jesus Maria Estudillo, Magdalena E. Nugent, and John Nugent — that is to say:

'J. B. Felton, Esq., to the sum of twenty five thousand dollars; S. M. Wilson, Esq., to the sum of twelve thousand dollars; W. H. Patterson, Esq., to the sum of twelve thousand dollars.

Digitized by Google

'These sums are to be paid, principal and interest, from the ate of said deed as soon as I shall be entirely reimbursed, rincipal, interest, advances, and expenses.

'Respectfully, yours, &c.,

LE ROY, TH.
JOHN B. FELTON.

'September 27th, 1871.'

"This is the true understanding about the above interests, as ill fully appear by the original thereof now in this defendant's ossession ready to be produced as the court shall direct."

The answer then set forth facts tending to show a knowldge of these facts in Patterson and Crittenden; denied that here had ever been any other trust, and averred that defendnt had not been reimbursed his advances, expenses, &c., but hat a large sum was still due him, and denied that he held ny money or property in trust for plaintiff.

A trial was had, and it was decreed that the bill be disnissed, from which appeal was taken. The defendant below aving deceased, the appellee Le Breton was appointed adminisrator of his estate, and appeared. The case was argued in this ourt both on the law and the facts.

Mr. Henry Beard and *Mr. Charles H. Armes*, for appellant, ited: *Hidden* v. *Jordan*, 21 Cal. 92; *Case* v. *Codding*, 38 Cal. 191; *Bayles* v. *Baxter*, 22 Cal. 575; *Millard* v. *Hathaway*, 27 Cal. 118; *Currey* v. *Allen*, 34 Cal. 254; *Jenkins* v. *Frink*, 30 Cal. 586; *Burhans* v. *Van Zandt*, 7 N. Y. 523; *Rothwell* v. *Dewees*, 2 Black, 613; *Flagg* v. *Mann*, 2 Sumner, 86, 523; *Kreutz* v. *Livingston*, 15 Cal. 344; *Gunter* v. *Jones*, Cal. 643; *King* v. *Remington*, Sup. Ct. Minnesota, 1886, not et reported, and cases therein cited.

Mr. Evans S. Pillsbury, for appellees, cited: *Dutton v. Warschauer*, 21 Cal. 609, 623; *Kreutz* v. *Livingston*, 15 Cal. 44; *Grattan* v. *Wiggins*, 23 Cal. 16; *White* v. *Carpenter*, 2 Paige, 217, 239; *Cunningham* v. *Hawkins*, 27 Cal. 603; *Troll v. Carter*, 15 West Va. 567; *Taylor* v. *McClain*, 60 Cal. 651;

Digitized by Google

Nat. Bk. v. *Ins. Co.*, 104 U. S. 54; *Taylor* v. *McClain*, 64 Cal. 513; *Knatchbull* v. *Hallett*, L. R. 13 Ch. Div. 696; *Bayles* v. *Baxter*, 22 Cal. 575; *Wright* v. *Ross*, 36 Cal. 414; *Millard* v. *Hathaway*, 27 Cal. 119; *Hoyt* v. *Martenso*, 16 N. Y. 231; *Roberts* v. *Ware*, 40 Cal. 634; *Twin Lick Oil Co.* v. *Marbury*, 91 U. S. 587; *Bostford* v. *Burr*, 2 Johns. Ch. 405; *Plymouth* v. *Hickman*, 2 Vern. 167; *Roe* v. *Popham*, Doug. 251; *Gibson* v. *Jeyes*, 6 Ves. 266, 270, 280; *Walker* v. *Walker*, 2 Atk. 98; *Lake* v. *Lake*, Ambler, 126; *Bellasis* v. *Compton*, 2 Vern. 294; *Howell* v. *Ransom*, 11 Paige, 538, 540, 542; *Page* v. *Page*, 8 N. H. 187; *Jennings* v. *McConnel*, 17 Ill. 148; *Jackson* v. *Feller*, 2 Wend. 465; *Ford* v. *Harrington*, 16 N. Y. 285, 289; *Wood* v. *Downes*, 18 Ves. 126; *Evans* v. *Ellis*, 5 Denio, 640, 643; *Jones* v. *Tripp*, Jacob, 322; *Cane* v. *Allen*, 2 Dow, 289; *Montesquieu* v. *Sandys*, 18 Ves. 302; *Edwards* v. *Meyrick*, 2 Hare, 60, 68.

Mr. Justice Harlan delivered the opinion of the court.

The amount secured to be paid by the deed of trust executed on the 1st day of October, 1870, by Juana M. Estudillo and others to Theodore Le Roy, was $446,849 in gold coin of the United States. Whether that sum included the $49,000 which is alleged to be due to Patterson, Wilson, Crittenden, and Felton for legal services rendered, cannot be determined by anything in the deed itself. The plaintiff, who sues as assignee of the claims of said attorneys, is compelled to resort to parol evidence to show that the parties to the deed intended to provide for the payment of the $49,000 out of the proceeds of the sale of the trust property, and to that end included it in the aggregate of $446,849. If that evidence was competent, it was the right of the defendant to show by parol evidence that the intention of the parties was to apply the proceeds of sale to the reimbursement of Le Roy, for all advances and payments made and expenses incurred by him, before anything was paid on the claims of the attorneys. Looking at all the evidence, we are satisfied that these propositions are sustained, namely: 1. That the $49,000 was embraced in the

Digitized by Google

446,849; 2. The former sum was not to be paid until Le Roy as reimbursed the entire amount due and to become due to m on account of principal, interest, advances, and expenses. hat the sales of the trust property fell short of meeting these tter demands by a large amount, is clearly established by e record of the suit in which the accounts of the trustee ere audited and settled, and by other evidence in this cause. Upon the whole case we think the decree was right, and it is

Affirmed.

NEW ORLEANS *v.* HOUSTON.

PPEAL FROM THE CIRCUIT COURT OF THE UNITED STATES FOR THE EASTERN DISTRICT OF LOUISIANA.

Argued November 17, 18, 1886. — Decided December 6, 1886.

ne service of process in this case having been upon the mayor of New Orleans, and the city having appeared and answered, the municipality is properly in court.

ne effect of article 167 of the Constitution of Louisiana of 1879 is to revive the charter of the Louisiana State Lottery Company of 1868, except as to the clause conferring upon it the exclusive privilege of establishing a lottery and dealing in lottery tickets, notwithstanding its repeal in 1879; and also to recognize the charter thus modified as a contract binding on the State for the period therein specified.

one v. *Mississippi*, 101 U. S. 814, distinguished.

grant in the Constitution of a State of a privilege to a corporation is not subject to repeal or change by the legislature of the State.

n assessment of a tax upon the shares of shareholders in a corporation appearing upon the books of the company, which the company is required to pay irrespective of any dividends or profits payable to the shareholder, out of which it might repay itself, is substantially a tax upon the corporation itself.

nited States v. *Railroad Co.*, 17 Wall. 322, and *National Bank* v. *Commonwealth*, 9 Wall. 353, distinguished.

The case is stated in the opinion of the court.

Mr. Walter H. Rogers and *Mr. J. Ward Gurley, Jr.*, for appellants.

Digitized by Google

Mr. John A. Campbell for appellees.

MR. JUSTICE MATTHEWS delivered the opinion of the court.

On the 27th of January, 1881, the Louisiana State Lottery Company, alleging itself to be a corporation under the laws of the State of Louisiana, filed its bill in chancery against the City of New Orleans and the tax assessors for the Parish of Orleans, the object and prayer of which were to obtain a perpetual injunction restraining the defendants from the assessment and collection of certain taxes about to be enforced against the complainant by the seizure and sale of its property. On final hearing there was a decree in conformity with the prayer of the bill, from which the defendants below prosecute the present appeal.

The allegations of the bill are in substance, that by an act of the Legislature of the State of Louisiana, passed in 1868, being Act No. 25 of that year, the Louisiana State Lottery Company was established and organized as a corporation: — that, among other immunities and franchises granted by said act, it was provided in article 5 that the company "shall pay the State of Louisiana the sum of forty thousand dollars per annum, which sum shall be payable quarterly in advance, from and after the 1st day of January, 1869, to the State Auditor, who shall deposit the same in the treasury of the State, and which shall be credited to the educational fund; and said corporation shall be exempt from all other taxes and licenses of any kind whatever from the State, parish, or municipal authorities": — that in the year 1871 legal proceedings were instituted by the City of New Orleans against the said company, in the Superior District Court for the Parish of Orleans, for the purpose of enforcing on behalf of said city certain taxes alleged to have been assessed against it, notwithstanding said exemption contained in its charter, the City of New Orleans claiming therein that said exemption was void: — that such proceedings were had thereon that on final hearing in the Supreme Court of Louisiana a judgment was rendered in favor of the lottery company, declaring said exemption to be valid and the said

Digitized by Google

axes illegal: — that the said company claims that the provision n its said charter exempting it from taxes as aforesaid beyond he sum of $40,000, payable annually, is a contract between he State of Louisiana and itself, and has been expressly con-rmed and recognized as such by the present Constitution of he State of Louisiana, adopted in 1879, in article 167, all the rovisions of which, it is alleged in the bill, the complainants ave complied with.

The bill further alleges that, notwithstanding the provisions f the said charter, and in defiance of the judgment of the upreme Court of Louisiana, and contrary to the Constitution f the State, the defendants "are about to levy and assess a tax pon the capital stock and other property of your orator, and he other defendants hereinbefore named have threatened and ré about to take proceedings against your orator for the col-ection of said illegal tax, which is illegal because prohibited y the Constitution of the United States as violative of the aid contract between your orator and the State of Louisiana"; hat the said officers of the State pretended to justify their ction under the provisions of Act No. 77 of the Legislature of ouisiana of 1880, which the complainant avers to be null and oid and of no effect, so far as it may be construed to author-e the proceedings of the defendants. The bill alleges that the omplainant has always promptly paid the amount called for y its charter to the State Treasurer, and in advance, and owes othing to the State on that account; and accordingly prays or an injunction to restrain the defendants from further ttempts to enforce the collection of the tax complained of.

To this bill a joint and several answer was filed by all of he defendants. That answer admits the incorporation of the ouisiana State Lottery Company, as alleged in the bill, and hat its charter constitutes a valid contract between the State f Louisiana and the company. It admits that the defendants re about to levy a tax upon the capital stock and upon other roperty of the complainant, but denies that such proceedings re illegal; and claims that Act No. 77 of the year 1880, assed by the Louisiana Legislature, is in no respect null and oid.

Digitized by Google

On final hearing a decree was passed wherein "the court decrees and declares that the act of the Legislature (No. 77 of the acts of 1880), so far as it imposes a tax upon the capital stock of the complainant, or upon the shares of the stock held by the shareholders of the complainant, is in conflict with article 5, § 1, of complainant's charter, found in Act No. 25 of the acts of 1868, and therefore impairs the obligation of a contract and is void. The court further decrees and declares, that, under the provisions of said charter as adopted as a contract by the Constitution of 1879, the capital of the complainant, both in the aggregate and as held by its shareholders, is exempted from all taxation of every kind, excepting the annual payment of forty thousand dollars. The court further decrees that the defendants herein be enjoined and restrained in manner and form and to the extent prayed for in the bill of complaint herein."

It is objected to this decree, in the first place, on behalf of the City of New Orleans, that that municipality was not properly in court by due service of process, but the objection does not seem to be well founded in fact. There was service of process upon the mayor, which is conceded to be the statutory method of serving process in such cases, and the city actually appeared by attorney and answered.

The principal question, however, arises upon the terms of article 167 of the Constitution of the State of 1879. That clause is as follows: "The General Assembly shall have authority to grant lottery charters or privileges; *provided* each charter or privilege shall pay not less than forty thousand dollars per annum in money into the treasury of the State; *and provided further*, that all charters shall cease and expire on the first of January, eighteen hundred and ninety-five, from which time all lotteries are prohibited in the State. The forty thousand dollars per annum now provided by law to be paid by the Louisiana State Lottery Company, according to the provisions of its charter granted in the year 1868, shall belong to the Charity Hospital of New Orleans, and the charter of said company is recognized as a contract binding on the State for the period therein specified, except its monopoly

Digitized by Google

ause, which is hereby abrogated; and all laws contrary to ie provisions of this article are hereby declared null and void; *rovided* said company shall file a written renunciation of all s monopoly features in the office of the Secretary of State ithin sixty days after the ratification of this Constitution."

It appears that by an act of the Legislature of Louisiana, hich took effect on the 31st of March, 1879, Act No. 25 of ie year 1868, which incorporated and established the Louisiia State Lottery Company, and all other laws on the same ibject-matter, were repealed, and the Louisiana State Lottery ompany was thereby abolished and prohibited from drawing ny and all lotteries or selling lottery tickets, either in its cororate capacity, or through its officers, members, stockholders, r agents, either directly or indirectly. That act also made it penal offence to draw any lottery or have any connection or iterest in or with the drawing of any lottery in the State, or sell or offer to sell any lottery tickets, or to set up or proiote any lottery in the State. This statute took effect before ie adoption of the Constitution of 1879, and was in force hen the latter went into operation in December, 1879.

It is now contended, on the part of the appellants, that rticle 167 of the Constitution of the State does not have the ffect to revive the original charter of the Louisiana State ottery Company as though it had never been repealed, but evives it only so far as under that clause the General Assemly was authorized to grant lottery charters or privileges in ie future; that this constitutional authority to grant new ottery charters or privileges does not warrant the Legislature stipulating, by way of contract, that the minimum license ix of $40,000 per annum shall be in lieu of all other taxes pon the property, and operate to exempt the company, so far s taxation is concerned, from the effect of other clauses of ie Constitution; that, by other provisions of the Constitiion, particularly article 207, no property can be exempt from axation except public property, places of religious worship or urial, charitable institutions, buildings and property used xclusively for colleges and other school purposes, real and ersonal estate of public libraries, household property to the

Digitized by Google

value of $500, and for the period of ten years from the adoption of the Constitution the capital, machinery, and other property employed in certain enumerated manufactories, wherein not less than five hands are employed in any one factory.

It is argued that the whole proper effect to be given to the provisions of article 167 of the Constitution is to secure to the Louisiana State Lottery Company such a charter as the General Assembly was authorized thereby to grant to any other lottery company, and to modify it as though it had been actually granted by the General Assembly under that clause. This intent is inferred from the language of the Constitution, which specifically forbids the future existence of the "monopoly clause" of the charter of the company, and requires it to file a written renunciation of this feature with the Secretary of State within sixty days after the ratification of the Constitution; the object in view being, as it is contended, obviously, to place the Louisiana State Lottery Company under its charter as granted in the year 1868, but subject to and modified by the provisions of the Constitution of 1879, on an equal footing merely with other and new lottery companies, to which by the terms of the Constitution the General Assembly was authorized to grant charters; and the conclusion deduced is, that, as under that Constitution the General Assembly had no authority to grant a charter for a lottery company which should contain the exemption relied upon as the ground of relief in the present suit, the exemption so relied on was repealed by the Constitution.

The argument seems to be, that if the Louisiana State Lottery Company is exempt from taxation beyond the annual sum of $40,000, and other companies to be chartered under the Constitution of 1879 are not and cannot be, the monopoly secured to the former by its original charter is perpetuated and not abrogated, as it was the express purpose of the Constitution to accomplish, for the reason that such a discrimination effectually and in advance prevents all possible competition.

The charter of the Louisiana State Lottery Company, being Act No. 25 of the year 1868, establishes a corporation for the

Digitized by Google

urpose of carrying on the business of a lottery, with a capital tock of $1,000,000. By the 4th section of the 8th article it as provided that the corporation should continue during the erm of twenty five years from January 1, 1869, for which me, it was added, it "shall have the sole and exclusive privi-ge of establishing and authorizing a lottery or series of lot-eries, and selling and disposing of lottery tickets, policy com-ination devices, and certificates and fractional parts thereof." nd by § 5 of the same article it was provided "that the said orporation shall also have the sole right and privilege, during e whole term of its existence as hereinbefore provided for, dispose of by lottery, or series of lotteries, any lands, im-roved or unimproved, which said corporation may become ossessed of by purchase or otherwise."

The exclusive right conferred by these provisions became e subject of judicial consideration by the Supreme Court of ouisiana in the case of *Louisiana State Lottery Co.* v. *Richoux*, ecided in November, 1871, and reported in 23 La. Ann. 743. y the decision in that case the exclusive right claimed by the ouisiana State Lottery Company to establish lotteries and to ll lottery tickets in the State, was adjudged in its favor by n injunction restraining the defendants from vending lottery ckets of other companies, in violation of the exclusive right laimed by the plaintiffs. The validity of the exemption of e lottery company from taxation in excess of the annual m of $40,000, as stipulated in article 5, § 1, of its charter, as upheld by a decision of the same court in the case of *ouisiana State Lottery Co.* v. *New Orleans*, 24 La. Ann. 86. he exemption was attacked in that case on the ground that was in violation of the State Constitution then in force, be-use it infringed the principle of equality and uniformity in e matter of imposing taxes, the Legislature being prohibited om exempting from taxation any species of property except ch as was actually used for charitable, educational, or reli-ious purposes, and for the additional reason that it granted rtain rights to the plaintiff which were denied to other tizens of the State. In reference to these objections the upreme Court of Louisiana said: "It may be said that the

Digitized by Google

power of a State Legislature to impose what is known as a commutation tax is a well recognized power, not only in our own jurisprudence, but generally. 11 Ann. 733; 9 Wall. 50; 17 Ill. 291; 30 Ind. 146. In the act under consideration the Legislature has deemed it advisable to grant to the lottery company an exemption from all other taxation except that of paying $40,000 per annum to the State for public education. On the commutation principle, we think the act is not violative of the Constitution. It is not clear that the city has any ground to object to this exemption by the State of the company it claims the right to require the payment of licenses from, the city being a municipal corporation and deriving its right to levy licenses from the State, and in this instance the right is withheld." The City of New Orleans was accordingly enjoined from further attempts to collect from the lottery company any municipal taxes or licenses.

It was in view of these decisions of the Supreme Court of the State, that the present Constitution was framed and adopted. Article 167 of that instrument expressly recognizes the charter of the Louisiana State Lottery Company, as granted in the year 1868, as existing with the force both of law and of contract, with the exceptions mentioned. It specifies that "the $40,000 per annum *now provided by law* to be paid by the Louisiana State Lottery Company, according to the provisions of its charter, granted in the year 1868, shall belong to the Charity Hospital of New Orleans;" but the only law which provided for the payment of $40,000 per annum was the charter of the company, and this clause diverts it from the educational fund, to which it had been appropriated by the terms of the charter, to the uses of the Charity Hospital of New Orleans. The article of the Constitution then proceeds to say: "And the charter of said company is recognized *as a contract* binding on the State for the period therein specified, except its monopoly clause, which is hereby abrogated." The monopoly clause hereby excepted and abrogated can be no other than that already referred to as contained in §§ 4 and 5 of article 8, by which was conferred upon the corporation the sole and exclusive privilege of establishing and authorizing a

Digitized by Google

lottery or series of lotteries, and selling and disposing of lottery tickets, &c. These are the only clauses in the charter granting any exclusive rights, and, therefore, the only ones which can be properly styled monopoly clauses.

The constitutional article then proceeds to say that "all laws contrary to the provisions of this article are hereby declared null and void." This clause operates as a repeal of so much of Act No. 44, approved March 27, 1879, as repeals the charter of the Louisiana State Lottery Company, and prohibits it from drawing lotteries and selling lottery tickets. That it did operate to that extent, but no further, was the express decision of the Supreme Court of Louisiana in the case of *Carcass* v. *Judge of First District Court*, 32 La. Ann. 719. It was held in that case that those portions of Act No. 44 which define the offences of drawing lotteries and selling lottery tickets, and providing punishment therefor, by all persons other than the Louisiana State Lottery Company, were not affected by the Constitution of 1879. The court in its opinion says: "Construing the act of 1879 and the article of the Constitution together, so as to give full effect to each and all the parts of both, and blending them together, we consider that the law of Louisiana on the subject of the vending of lottery tickets simply is: The sale of lottery tickets in this State is absolutely prohibited *unless* by organizations chartered by the State, which, *before* dealing in that kind of speculation, shall have paid an annual license of not less than forty thousand dollars to the State. There shall exist no monopoly for the sale of such tickets or doing of such business. Individuals violating the law by selling lottery tickets or dealing in the lottery business, *without having previously obtained a charter and paid the required license in the manner provided by law, shall be prosecuted and punished by fine and imprisonment.* The Louisiana State Lottery Company, previously in existence, shall continue its operations on abdicating all its pretensions to a monopoly, and on complying with the requirements touching the payment of the license."

The effect, therefore, of article 167 of the Constitution of Louisiana is to revive the charter of the Louisiana State

Digitized by Google

Lottery Company granted in the year 1868, notwithstanding its repeal by Act No. 44 of the year 1879, except as to the clause which confers upon it the exclusive privilege of establishing a lottery and dealing in lottery tickets, and to recognize the charter thus modified as a contract binding on the State for the period therein specified. This renews and establishes the obligation of the corporation under § 1, article 5 of its charter, to pay to the State the annual sum of $40,000, in consideration of which it is declared to be "exempt from all other taxes and licenses of any kind whatever, whether from State, parish, or municipal authorities."

In answer to the argument of counsel that this places the Louisiana State Lottery Company, under the Constitution of 1879, on a better footing than any other lottery company chartered by the General Assembly thereafter, for the reason that no such exemption can be granted to the latter, it is sufficient to say, that, if this consequence be admitted, the monopoly, which is supposed to be thus created in favor of the Louisiana State Lottery Company, is not one derived under any clause of its charter as granted in the year 1868, but is one created by the Constitution itself, although, merely by way of inference, by this mode of interpretation.

It is further contended, however, on the part of the appellants, that if the charter of the Louisiana State Lottery Company is recognized as a contract by article 167 of the Constitution, it is not such a contract as is protected by the Constitution of the United States against future legislation by the State impairing its obligation, for the reason that its subject-matter is embraced within the scope of the police power of the State, the exercise of which cannot be effectually bound by contract. And thus the case is thought to be brought within the principle established by this court in the case of *Stone* v. *Mississippi*, 101 U. S. 814, 820. In its opinion in that case the court said: "The contracts which the Constitution protects are those that relate to property rights, not governmental. It is not always easy to tell on which side of the line which separates governmental from property rights a particular case is to be put, but in respect to lotteries there can

Digitized by Google

e no difficulty. They are not, in the legal acceptation of he term, *mala in se*, but, as we have just seen, may properly e made *mala prohibita*. . . . Certainly the right to sup- ress them is governmental, to be exercised at all times by hose in power at their discretion. Any one, therefore, who ccepts a lottery charter does so with the implied understand- ng that the people in their sovereign capacity, and through heir properly constituted agencies, may resume it at any time hen the public good shall require, whether it be paid for or ot. All that one can get by such a charter is a suspension f certain governmental rights in his favor, subject to with- rawal at will. He has in legal effect nothing more than a cense to enjoy the privilege, on the terms named, for the pecified time, unless it be sooner abrogated by the sovereign ower of the State. It is a permit, good as against existing ws, but subject to future legislative and constitutional con- rol or withdrawal."

This language must be construed in reference to the circum- ances of the case in respect to which it was used. That was case of an act of the Legislature of Mississippi granting a harter to a lottery company abrogated by a provision in the onstitution of the State subsequently adopted. The con- erse is the present case. The grant of the charter to the ouisiana State Lottery Company is contained in the Consti- ution, and the question is whether the Legislature, acting nder that Constitution, can contravene it. That is a ques- on which needs no answer; its statement is sufficient. It is ndoubtedly true that no rights of contract are or can be ested under this constitutional provision which a subsequent onstitution might not destroy without impairing the obliga- on of a contract, within the sense of the Constitution of the nited States, for the reason assigned in the case of *Stone* v. *Mississippi*. But an ordinary act of legislation cannot have hat effect, because the constitutional provision has withdrawn rom the scope of the police power of the State, to be exer- sed by the General Assembly, the subject-matter of the ranting of lottery charters, so far as the Louisiana State Lot- ery Company is concerned, and any act of the Legislature

Digitized by Google

contrary to this prohibition is upon familiar principles null and void. The subject is not within the jurisdiction of the police power of the State, as it is permitted to be exercised by the Legislature under the Constitution of the State.

It is next contended, on the part of the appellants, that the exemption contained in the charter of the Louisiana State Lottery Company, as confirmed by the Constitution of the State, does not extend further than those taxes and licenses in excess of the annual sum of $40,000, which may be assessed upon the corporation itself; and it is said that the tax sought to be levied, and the assessment of which has been enjoined in the present case, is not a tax upon the corporation itself, but upon the shareholders on account of their shares in its capital stock held by them as individuals. The facts in regard to the character of the tax, and the mode of its assessment, do not clearly appear from the pleadings. In the bill it is alleged that the defendants "are about to levy and assess a tax upon the capital stock and other property of your orator," and "are about to take proceedings against your orator for the collection of said alleged tax . . . by serving a notice to that effect, to seize and sell the property rights and credits of your orator," and that these acts are done under the pretended authority of "the provisions of Act No. 77 of the Legislature of Louisiana of 1880, which said law," it is averred, "is null and void and of no effect, so far as your orator is concerned, inasmuch as by authorizing the levy of a tax upon the property of your orator, other than that provided for in the charter of your orator as aforesaid, said act violates the contract between your orator and the State of Louisiana by requiring of your orator other taxes than those provided for in said charter, and is repugnant to paragraph 2, section 10 of article 1 of the Constitution of the United States."

In the answer the defendants "admit that, at the time of the issuance of the preliminary injunction herein, the State assessors for the Parish of Orleans were about to levy a tax upon the capital stock of the complainant, and upon other of complainant's property;" and the State tax collector admits that he had served notice upon the company, that he was

Digitized by Google

about "to seize and sell the property rights and credits of complainant, and to take the legal measures to enforce the collection of the tax complained of." It is also admitted, on the part of the city of New Orleans, that it intended to compel payment of the taxes assessed as aforesaid on its behalf, and Act No. 77 of the Legislature of Louisiana of 1880 is set up as a justification. Section 48 of that act is as follows: "That no assessment shall hereafter be made under that name, as heretofore, of the capital stock of any national bank, State bank, banking company, banking firm, or banking association, or of any corporation, company, firm, or association, whose capital stock is represented by shares, but the actual shares shall be assessed to the shareholders who appear as such upon the books, regardless of any transfer not registered or entered upon the books; and it shall be the duty of the president, or other proper officer, to furnish to the tax collector a complete list of those who are borne upon the books as shareholders; and all the taxes so assessed shall be paid by the bank, company, firm, association, or corporation, which shall be entitled to collect the amounts from the shareholders or their transferees. All property owned by the bank, company, firm, association, or corporation, which is taxable under sections one and three of this act, shall be assessed directly to the bank, company, firm, association, or corporation, and the *pro rata* of such direct property taxes, and of all exempt property, proportioned to each share of capital stock, shall be deducted from the amount of taxes assessed to that share under this section. . . . Such assessments shall be made where the bank, etc., is located, and not elsewhere, whether the shareholders reside there or not. . . ."

It is well settled by the decisions of this court that the property of shareholders in their shares, and the property of the corporation in its capital stock, are distinct property interests, and, where that is the legislative intent clearly expressed, that both may be taxed. *Van Allen* v. *Assessors*, 3 Wall. 573; *The Delaware Railroad Tax*, 18 Wall. 206; *Farrington* v. *Tennessee*, 95 U. S. 679.

In *Tennessee* v. *Whitworth*, 117 U. S. 129, 136, the Chief

Digitized by Google

Justice delivering the opinion of the court, said: "In corporations four elements of taxable value are sometimes found: 1, franchises; 2, capital stock in the hands of the corporation; 3, corporate property; and, 4, shares of the capital stock in the hands of the individual stockholders. Each of these is, under some circumstances, an appropriate subject of taxation; and it is no doubt within the power of a State, when not restrained by constitutional limitations, to assess taxes upon them in a way to subject the corporation or the stockholders to double taxation. Double taxation is, however, never to be presumed. Justice requires that the burdens of government shall, as far as is practicable, be laid equally on all, and if property is taxed once in one way, it would ordinarily be wrong to tax it again in another way, when the burden of both taxes falls on the same person. Sometimes tax laws have that effect; but if they do, it is because the legislature has unmistakably so enacted. All presumptions are against such an imposition."

But the question of legislative intent is always open upon the language of the exemption. In the present case the corporation is exempted by its charter from all other taxes and licenses of any kind whatever in excess of the sum of $40,000 per annum, and yet by Act No. 77, though the assessment is not to be made upon its capital stock, but upon the shares of shareholders appearing upon its books, nevertheless, the tax so assessed is to be paid by the company, although it is entitled to collect the amount so paid from the shareholder on whose account it is payable; but this payment by the company is to be made irrespective of any dividends or profits payable to the shareholder out of which it might be repaid. That it is substantially a tax upon the corporation itself, is unequivocally shown by the subsequent clause, which authorizes a deduction from the amount of taxes assessed to each share of its proportion of the direct property taxes paid by the company as such under §§ 1 and 3, and of all exempt property belonging to the corporation. But as all the property of the Louisiana State Lottery Company is exempt from taxes after payment of the annual sum of $40,000, nothing remains to be charged as a tax upon the shareholder as distinct from the corporation

Digitized by Google

under the provisions of this section. Indeed, it is quite apparent from the language of the whole section, that, while nominally the taxes authorized are not to be assessed upon the capital stock of the corporation in the aggregate and as its property, yet in substance that is its effect. The taxes are assessed upon the actual shares as registered in the names of individual shareholders, but are to be paid by the corporation, so that while the form and mode of taxation is changed, its substance remains as though assessed against the corporation by name.

The case differs altogether from that of *United States* v. *Railroad Co.*, 17 Wall. 322, in which it was held that the tax provided for in the 122d section of the Internal Revenue Act of 1864, as amended, requiring railroad and other corporations to pay a tax upon interest and dividends payable by them, with the right to deduct the same from the amounts otherwise due to creditors and stockholders, was a tax upon the latter and not upon the corporation, because the corporation was made use of merely as a convenient means of collecting the tax. And it cannot be considered as ultimately a tax upon the shares, as the property of the shareholders, within the principle of the decision in *National Bank* v. *Commonwealth*, 9 Wall. 353. There the act of Congress expressly distinguished between the taxing of the bank and the taxing of its shareholders on account of their shares, and, as was held in that case, left it open to the State to collect the tax levied on the shares by imposing the duty of collecting it upon the corporation. That, we think, is prohibited in this case by the terms of the contract contained in the charter, which exempts the corporation from the payment of all taxes whatever in excess of the specified annual sum, whether levied on it or to be paid by it on any account whatever. A tax such as that sought to be imposed upon the company by the appellees, is a tax upon the corporation within the meaning or the prohibition of its charter, because it is compelled to become surety for taxes nominally imposed upon its stockholders, and is made liable primarily for their payment; a payment which, in the first instance, must be made out of the corporate property,

Digitized by Google

without other recourse than an action against individual stockholders to recover the amounts advanced on their account.

The fair inference is that the taxation of the Louisiana State Lottery Company is not within the purview of § 48 of Act No. 77 of the year 1880, and that it was not within the intention of the Legislature, as expressed in that act, to impose upon the company any other taxes than those provided for in its own charter; but, if otherwise, Act No. 77 is void, as a law impairing the obligation of a contract.

We find no error in the decree of the Circuit Court, and it is therefore

Affirmed.

HAMILTON *v.* VICKSBURG, SHREVEPORT & PACIFIC RAILROAD.

ERROR TO THE SUPREME COURT OF THE STATE OF LOUISIANA.

Argued November 10, 1886. — Decided December 6, 1886.

Whenever the exercise of a right, conferred by law for the benefit of the public, is attended with temporary inconvenience to private parties, in common with the public in general, they are not entitled to damages therefor.

A railroad company was authorized by the Legislature of Louisiana to construct a railroad across that State, and as part of such road to construct necessary bridges for crossing navigable streams. The act made no provision for the form or character of such structures. A bridge across a navigable stream was constructed with a draw. In process of time it became decayed, and defendant in error, having succeeded to the rights of the company, employed a contractor to construct a new bridge in its place, the work to be done at a time of the year when it would least obstruct navigation. The contractor complied with his contract as to the time; but owing to unusual rains the river continued navigable, and the work was unavoidably prolonged, thereby obstructing its navigation and preventing the vessels of plaintiff in error from passing beyond the bridge. *Held:* That this was a case of *damnum absque injuriâ.*

Escanaba Co. v. *Chicago*, 107 U. S. 678, and *Cardwell* v. *American Bridge Co.*, 113 U. S. 205, affirmed and applied.

The case is stated in the opinion of the court. The case in the court below will be found reported in 34 La. Ann. 973.

Digitized by Google

Mr. John T. Ludeling, for plaintiff in error, submitted on his brief, citing *Little Rock, &c., Railroad* v. *Brooks*, 39 Arkansas, 403, and cases there cited; *Ingraham* v. *Police Jury*, 20 La. Ann. 226; *Winnipeseogee Lake Co.* v. *Young*, 40 N. H. 420; *Atwater* v. *Schenck*, 9 Wis. 160; *The Peterhoff*, Blatchford, Prize Cases, 463; *Indianapolis & Cincinnati Railroad* v. *Stephens*, 28 Ind. 429; *Wright* v. *Hawkins*, 28 Texas, 452; *Neaderhouser* v. *State*, 28 Ind. 257; *McManus* v. *Carmichael*, 3 Iowa, 1; *Wood* v. *Fowler*, 26 Kansas, 682; *The Daniel Ball*, 10 Wall. 557; *Willamet Iron Bridge* v. *Hatch*, 19 Fed. Rep. 347; *Cardwell* v. *American Bridge Co.*, 113 U. S. 205.

Mr. George Hoadly, Jr., (*Mr. George Hoadly*, *Mr. Edgar M. Johnson*, and *Mr. Edward Colston* were on the brief,) cited *Willson* v. *Blackbird Creek Marsh Co.*, 2 Pet. 245; *Gilman* v. *Philadelphia*, 3 Wall. 713; *Pound* v. *Turck*, 95 U. S. 459; *Escanaba Co.* v. *Chicago*, 107 U. S. 678; *Cardwell* v. *American Bridge Co.*, 113 U. S. 205.

Mr. Justice Field delivered the opinion of the court.

The authority vested by its act of incorporation in the Vicksburg, Shreveport, and Texas Railroad Company to construct a railroad from a point opposite Vicksburg to the State line of Texas, empowered it to construct as part of the road all necessary bridges for the crossing of navigable streams, which might be on its line. It was so held by the Supreme Court of the State of Louisiana, and it would seem to be a self-evident proposition. What the form and character of the bridges should be, that is to say, of what height they should be erected; and of what materials constructed, and whether with or without draws, were matters for the regulation of the State, subject only to the paramount authority of Congress to prevent any unnecessary obstruction to the free navigation of the streams. Until Congress intervenes in such cases, and exercises its authority, the power of the State is plenary. When the State provides for the form and character of the structure, its directions will control, except as against the action of Con-

Digitized by Google

gress, whether the bridge be with or without draws, and irrespective of its effect upon navigation.

As has often been said by this court, bridges are merely connecting links of turnpikes, streets, and railroads; and the commerce over them may be much greater than that on the streams which they cross. A break in the line of railroad communication from the want of a bridge may produce much greater inconvenience to the public, than the obstruction to navigation caused by a bridge with proper draws. In such cases, the local authority can best determine which of the two modes of transportation should be favored, and how far either should be made subservient to the other. *Gilman* v. *Philadelphia*, 3 Wall. 713, 729.

In the case at bar, no specific directions as to the form and character of the bridges over the streams on the line of the railroad were prescribed by the legislature of the State. The authority of the company to construct them was only an implied one, from the fact that such structures were essential to the continuous connection of the line. Two conditions, however, must be deemed to be embraced within this implied power; one, that the bridges should be so constructed as to insure safety to the crossing of the trains, and be so kept at all times; and the other, that they should not interfere unnecessarily with the navigation of the streams.

The line of road crossed a small stream, one of the tributaries of the Ouachita river, called Bouff river, which was navigable for about six months in the year. This river has its rise in Arkansas, and by its connection with the Ouachita, which empties into Red river, its waters find their way to the Mississippi. Over this river, the company constructed a bridge with a draw sufficiently large to allow the passage of steamers. It was used for years without complaint from any one, so far as the record discloses. But in 1880, it was found, upon inspection, to be decayed and unsafe for the passage of trains. The defendant, which had succeeded to the property and interests of the Vicksburg, Shreveport and Texas Company, therefore determined to rebuild it. To carry out this purpose with as little inconvenience as practicable to vessels navigating the river, the

Digitized by Google

company contracted with an experienced builder to construct the bridge during the summer months, when the river was usually too low for navigation. The work could not be begun until the subsidence of the water in July. In order to expedite its construction, the company stipulated with the contractor to prepare the timbers at its workshops and transport them to the ground as soon as the state of water would permit the work to be commenced; and it carried out its stipulation in that respect. In the construction of the new bridge it became necessary to dismantle the draw of the old one, and to erect temporary supports while the timbers and draw of the new bridge were being put in place. To prevent the stoppage of its trains while this building was going on, the company constructed a temporary bridge adjoining the old one, for their transportation, expecting to have the new bridge completed before the winter rise, which usually began near the close of December, should render the river navigable. But, early in August, rains set in, and continued almost incessantly for months, rendering the river navigable in November, much earlier than usual. The work on the new bridge was thereby greatly impeded. To obviate this impediment, as far as possible, the company added to the contractor's force a gang of its own bridge laborers, who assisted by working at night and on Sundays.

The court below found that the company did everything in its power to accelerate the work on the new bridge, but it was not completed until December 20th following. The water in the river being increased by the unusual rains, there was sufficient depth on the 6th of November to carry the plaintiff's steamer with freight above the bridge. But the steamer could not pass owing to the temporary structure and the supports used in the erection of the new bridge. For the losses alleged to have been sustained from this obstruction between the 6th of November and the 20th of December, the plaintiff brought this action.

The District Court of Louisiana gave judgment for the plaintiff in the sum of one thousand dollars, from which both parties appealed to the Supreme Court of the State — the plaintiff because he did not recover as much as he claimed, and the

Digitized by Google

defendant because there was a recovery of any sum. The Supreme Court reversed the judgment, holding that the company was authorized by the charter of the original company, to which the defendant had succeeded, to construct a bridge over the river for the passage of its trains, and, when out of repair and decayed, to replace it with a new one; that the obstruction to navigation caused by the construction of the new bridge was unavoidable, and the company could not, therefore, be held responsible for any injury resulting therefrom; that it was a case in which the defendant was entitled to the protection of the rule of *damnum absque injuriâ*. It accordingly reversed the judgment, and ordered that the action be dismissed.

The plaintiff contends, that Congress had previously acted with respect to the navigation of this river and of all other navigable waters in Louisiana, and had thereby interdicted the placing of any obstruction in them, even of a temporary character, to the passage of vessels. He cites in support of this position the act of February 20th, 1811, enabling the people of the Territory of Orleans to form a constitution and State government, the third section of which enacted that the convention called to frame the Constitution should, by an ordinance irrevocable without the consent of the United States, provide, among other things, "that the river Mississippi and the navigable rivers and waters leading into the same or into the Gulf of Mexico, shall be common highways and forever free, as well to the inhabitants of the said State as to other citizens of the United States, without any tax, duty, impost, or toll therefor, imposed by the said State," 2 Stat. 642, and also the proviso to the act of April 8th, 1812, for the admission of Louisiana, which declares that it is upon a similar condition that the State is incorporated into the Union. 2 Stat. 701, § 1.

A similar provision is found in the acts admitting the States of California, Wisconsin, and Illinois into the Union, with respect to the navigable rivers and waters in them, the purport and meaning of which have been the subject of consideration by this court. *Escanaba Co.* v. *Chicago*, 107 U. S. 678,

Digitized by Google

and *Cardwell* v. *American Bridge Company*, 113 U. S. 205. In the latter case, we had before us the clause in the act admitting California, and we held that it did not impair the power which the State could exercise over its rivers, even if the clause had no existence. We there referred to previous decisions upon a similar enactment, and said "that if we treat the clause as divisible into two provisions, they must be construed together as having but one object, namely, to insure a highway equally open to all without preference to any, and unobstructed by duties or tolls, and thus prevent the use of the navigable streams by private parties to the exclusion of the public, and the exaction of any toll for their navigation; and that the clause contemplated no other restriction upon the power of the State in authorizing the construction of bridges over them, whenever such construction would promote the convenience of the public."

The objection to the authority conferred upon the company to construct the bridge, from the legislation of Congress, is, therefore, not tenable; and we agree with the ruling of the court below that, whenever the exercise of a right, conferred by law for the benefit of the public, is attended with temporary inconvenience to private parties, in common with the public in general, they are not entitled to any damages therefor. The obstruction caused to the navigation of the stream during the progress of the work on the new bridge, therefore, afforded no ground of action. The inconvenience was *damnum absque injuria*. *Bennett* v. *City of New Orleans*, 14 La. Ann. 120; *Barbin* v. *Police Jury of Avoyelles*, 15 La. Ann. 559.

Judgment affirmed.

Digitized by Google

SCHMIDT *v.* COBB.

APPEAL FROM THE CIRCUIT COURT OF THE UNITED STATES FOR THE NORTHERN DISTRICT OF IOWA.

Submitted October 12, 1886. — Decided October 25, 1886.

A commenced a proceeding in equity in a District Court of Iowa against B for violating the provisions of §§ 1540, 1542 of the Code of that State respecting the sale of intoxicating liquors, and the owning and keeping such liquors with intent to sell the same. B filed his petition, alleging that by these proceedings and by the construction given to the statute by the Supreme Court of Iowa in another case, he was deprived of his rights under the Constitution and laws of the United States, and praying for the removal of the cause to the Circuit Court of the United States; and it was so removed. In that court A filed an amended complaint, and B filed an amended petition for removal; each by leave of court. A moved that the cause be remanded to the State Court. The Circuit Court remanded it, from which order B appealed. This court affirms the decree of the court below by a divided court.

This was a process styled "a petition in equity," commenced by appellee September 4, 1884, in the District Court of Dubuque County, Iowa, under § 1543 of the Amended Code of Iowa, to recover a fine from appellants for violations of the provisions of §§ 1540 and 1542 of that Code. These sections are as follows:

"SEC. 1540. If any person not holding such permit [a permit to buy and sell intoxicating liquors for the purposes named in § 1527] by himself, his clerk, servant, or agent shall directly or indirectly or by any device, sell or in consideration of the purchase of any other property, give to any person any intoxicating liquors, he shall for the first offence be deemed guilty of a misdemeanor," &c.

"SEC. 1542. No person shall own or keep, or be in any way concerned, engaged or employed in owning or keeping any intoxicating liquors, with intent to sell the same within this state, or to permit the same to be sold therein in violation of the provisions hereof; and any person who shall so own or

Digitized by Google

keep, or be concerned, engaged, or employed in owning or keeping such liquors with any such intent shall be deemed for the first offence guilty of a misdemeanor," &c. The guilty person is then subjected to accumulating penalties, until they reach $300, and six months in the county jail.

"SEC. 1543. In cases of violation of the provisions of either of the three preceding sections, or of section fifteen hundred and twenty-five of this chapter, the building or erection of whatever kind, or the ground itself, in or upon which such unlawful manufacture or sale, or keeping, with intent to sell, use or give away, of any intoxicating liquor, is carried on, or continued, or exists, and the furniture, fixtures, vessels and contents, is hereby declared a nuisance, and shall be abated as hereinafter provided. And whoever shall erect or establish, or continue or use any building, erection or place, for any of the purposes prohibited in said sections, shall be deemed guilty of a nuisance and may be prosecuted and punished accordingly, and upon conviction shall pay a fine of not exceeding $1000 and costs of prosecution and stand committed until the fine and costs are paid, and the provisions of c. 47, title 25, of this code, shall not be applicable to persons committed under this section. Any citizen of the county, where such nuisance exists, or is kept or maintained, may maintain an action in equity to abate and perpetually enjoin the same, and any person violating the terms of any injunction granted in such proceedings, shall be punished as for contempt, by a fine of not less than five hundred nor more than one thousand dollars, or by imprisonment in the county jail not more than six months, or by both such fine and imprisonment, in the discretion of the court."

The petition in equity was as follows, being entitled as of September Term, 1884:

The plaintiff, agent of the Citizens' Law and Order League of Dubuque, complaining, shows to the court and avers as follows:

Par. 1st. That he is a citizen of Dubuque County, State of Iowa.

Par. 2d. That defendants, Schmidt Brothers, a firm com-

Digitized by Google

posed of Albert Schmidt and Titus Schmidt, at the city and county of Dubuque, at the Iowa Brewery so called, situated upon Couler Avenue, in said city, and upon lot number 5 in Brewery addition, as platted and recorded with Dubuque deeds, have established a saloon and place for the keeping and sale of intoxicating liquors, to wit, whiskey, wine, gin, and beer, in violation of law, and are now keeping, and employed and engaged in keeping, said intoxicating liquors in said saloon and place with the intent to sell the same, and with the intent to permit the same to be sold therein, contrary to the provisions of § 1542 of the Code of Iowa as amended and substituted by an act of the General Assembly of the State of Iowa, approved April 3d, 1884.

Par. 3d. That in the month of August, 1884, the said defendants, in the saloon and place aforesaid, did, by themselves, their clerk, agent, and servant, sell to divers and sundry persons intoxicating liquors, to wit, whiskey, wine, gin, and beer, contrary to the provisions of § 1540 of the Code of Iowa as amended and substituted by an act of the General Assembly of the State of Iowa, approved April 3d, 1884.

Par. 4th. That said defendants, at the saloon and place aforesaid, have heretofore, to wit, since the 15th day of July, 1884, by themselves, their clerk, agent, and servant, sold, and continue from day to day to sell, intoxicating liquors, to wit, whiskey, wine, gin, and beer, as a beverage, contrary to law.

Par. 5th. That said defendants are the owners of the premises aforesaid, and are the owners of certain whiskey, gin, wine, and beer kept and contained in certain kegs, bottles, and other vessels for illegal sale upon said premises as aforesaid, and are the owners of certain furniture and fixtures on the said premises used in said business.

Par. 6th. Whereby and by reason of the premises and in manner and form as aforesaid, the said defendants, Schmidt Bros., at the saloon and place aforesaid, have established and are now keeping and maintaining a nuisance, to the great injury of the plaintiff and other good citizens of said county, and to the detriment of the public peace and safety, and unless restrained by the order and decree of this court, will continue to

Digitized by Google

keep and maintain said nuisance at said place, in violation of law and to the public injury. Wherefore plaintiff prays that said saloon and place be adjudged and decreed to be a nuisance, and that the same be abated, and said defendants be enjoined by preliminary injunction from further keeping or maintaining said saloon and place for the illegal sale of intoxicating liquors, and also from keeping the said liquors with intent to sell the same contrary to law, and also from selling the same in said place contrary to law either by themselves or their clerk, agent, or servant, and that upon final hearing said injunction be made perpetual, and that plaintiff have such other and further relief as in equity he is entitled to, and also that he have judgment for costs.

At the same term respondents appeared, and on the 24th September, 1884, demurred to the petition, assigning the following reasons for demurrer. (1) The petition shows that plaintiff has no legal capacity to sue. (2) The petition shows no such interest in the plaintiff, in the event of the suit, as will enable him to maintain this action. (3) The petition nowhere alleges that said defendant has been, by a proper tribunal, convicted of the alleged nuisance sought to be enjoined. (4) The petition shows that this court has no jurisdiction of the cause of action set out in the petition. (5) The court has no jurisdiction of this action, because it is an attempt, in a court of chancery, to pass upon the guilt or innocence of the defendant under a penal and criminal statute, and it is by said action sought to deprive him of a jury trial upon the issue raised. (6) The section of the statute under which this action is brought is unconstitutional, null, and void, because it is an attempt to deprive the party accused of the offence herein of a jury trial. (7) The facts stated in the petition do not entitle the plaintiff to the relief demanded.

At September Term 1885, defendants presented the following petition for the removal of the cause to the Circuit Court of the United States, entitled in the cause:

1st. Your petitioner, the above named defendant, shows to the court that he is, and for five years last past has been, a citizen of the State of Iowa.

Digitized by Google

2d. That long prior to and ever since the fourth day of July, A.D. 1884, he was continuously engaged upon the premises mentioned in plaintiff's petition, in the business of keeping a saloon, under and in accordance with the laws of Iowa.

3d. That in the commencement and prosecution of said business he had and has involved property of great value, which will be rendered entirely worthless if the plaintiff succeeds against him in the present action, and being over twenty dollars in value.

4th. That there has been no trial or final hearing of this cause.

5th. That the twentieth General Assembly of the State of Iowa passed an enactment which petitioner prays may be considered in this case, which by its terms went into effect on the 4th day of July, A.D. 1884, being cc. 8 and 143, laws of the 20th General Assembly of the State of Iowa, amending and repealing sections of title XI, c. 6, Code of Iowa, relating to the sale of intoxicating liquors, which renders highly penal the prosecution of said saloon business, and which, if enforced, as threatened, as hereinafter stated, will destroy the property of defendant so used and deprive him unlawfully of said occupation.

6th. That under the provisions of said law defendant can be deprived of his property and punished with heavy penalties for being engaged in said saloon business without having the opportunity and right of a jury trial upon the questions involved, and without any trial whatever, except as pointed out by said act.

7th. That the Supreme Court of the State of Iowa, at March Term, 1885, in the case of *Littleton* v. *Fritz*, has declared said law in full force, and the persons in the situation of defendant can be prosecuted under it and be deprived of property and liberty without any right to a jury trial.

8th. That under said enactment and said decision the said plaintiff has begun and is prosecuting this suit.

9th. That by said proceedings under said enactment and said decision said defendant is deprived of the rights guaranteed him under the acts of Congress usually known as the

Digitized by Google

"Civil Rights" law, and under the Constitution of the United States and amendments thereto especially is he denied, and he cannot enforce in the State judicial tribunals of Iowa, the rights secured to him under said "Civil Rights" law and said Constitution of the United States, and especially the 14th Amendment thereto, and said enactment of said 20th General Assembly and said decision are in violation of said "Civil Rights" law.

"Therefore defendant offers, as provided by law, to file copies of all pleadings and proceedings herein in the Circuit Court of the United States for the Northern District of Iowa on the first day of its next term, and prays that this suit may be removed into said court, as provided by § 641 of the Revised Statutes of the United States."

On the 21st September, 1885, this petition was granted, and the cause was ordered to be removed. By the endorsement of the deputy clerk of the Circuit Court of the United States the papers appear to have been filed in that court on the 17th November, 1885.

On the 23d December, 1885, an amended petition, entitled as of September Term, 1884, District Court of Dubuque County, Iowa, was filed in the Circuit Court of the United States. This differed from the previous petition in the following respects. Paragraphs 1 and 5 were identical in both. In paragraph 2 defendants were styled "Schmedt" instead of "Schmidt," and "Alfred" instead of "Albert"; the *locus* was averred as "a saloon" instead of "a saloon and a place"; and the words "at retail as a beverage" were omitted. In paragraphs 3, 4, and 6, the same changes were made in the averment as to the *locus*, and in the words "at retail and as a beverage."

On the 17th November, 1885, plaintiff moved, in the Circuit Court, to remand the cause to the District Court of Iowa for the following reasons: "(1) Because the petition for removal fails to state facts showing that defendants were entitled to remove said action from the State court under the provisions of § 641 of the Revised Statutes of the United States. (2) Because said petition fails to state facts sufficient to give—

Digitized by Google

court jurisdiction of said action. (3) Because said petition fails to state facts showing that defendants are denied or cannot enforce in the judicial tribunals of the State of Iowa any rights secured to them by any law providing for the equal civil rights of citizens of the United States, or of all persons within the jurisdiction of the United States, within the provisions and purview of § 641 of the Revised Statutes of the United States. (4) Because said action was improperly removed from said State court, as it involves no dispute or controversy within the jurisdiction of this court."

On the 23d December, 1885, defendants filed in the Circuit Court of the United States the following amended petition for removal:

"1st. Your petitioners, the above named defendants, show to the court that they are, and for five years last past have been, citizens of the United States and the State of Iowa, residing in the State of Iowa.

"2d. That long prior to the 4th day of July, A.D. 1884, and ever since that time they have been engaged in the business of brewing beer and selling the same at both wholesale and retail, and they have kept upon the premises mentioned in the petition, being the same premises upon which said beer is manufactured, which said premises have all said time belonged to and are now owned by defendants, and contain large breweries, erected for the purpose of manufacturing beer and for no other purpose, and are suited for no other purpose, a room and bar where said beer so manufactured is kept for sale at retail, which is the keeping of a saloon charged in the petition herein and not other or different, and defendants claim that such business is legal under the laws of Iowa.

"3d. That they have invested in said business of brewing and selling beer a large sum of money, and there is involved in this case, in addition to the personal rights of defendants, the sum of ten thousand dollars, exclusive of costs, and more than that amount of property belonging to defendants will be rendered entirely worthless if plaintiff succeeds against them in the present action.

"4th. That there has been no trial or final hearing of this case.

Digitized by Google

"5th. That plaintiff has filed his motion herein for a temorary injunction to restrain defendants from prosecuting their aid business, which plaintiff is endeavoring to press to a hearng in the State court, which, if allowed, will be of irreparable njury to defendants.

"6th. That the 20th General Assembly of the State of Iowa assed an enactment which defendants ask may be considered n this case, which, by its terms, went into effect on the 4th ay of July, A.D. 1884, being cc. 8 and 143, laws of the 20th General Assembly of the State of Iowa, amending sections f title XI, chapter VI of the Code of Iowa, relating to the ale of intoxicating liquors, which defendants claim should be eclared of no effect, which renders highly penal the prosecuion of said business of defendants, and which, if enforced, as hreatened, in this case, as hereinafter stated, will destroy the roperty of defendants so used and deprive them unlawfully f their said occupation.

"7th. That under the provisions of said law defendants can e deprived of their property and punished with heavy penalies for being engaged in said business without having the pportunity and right of a trial by jury upon the questions of act involved, and without any trial whatever except as pointed ut by said act.

"8th. That the Supreme Court of the State of Iowa in the ase of *Littleton* v. *Fritz*, decided at the March Term, A.D. 1885, f said court, to which reference is here prayed, has declared aid law in full force, and that persons in the situation of efendants can be prosecuted under it, and be deprived of roperty and liberty without any right of a jury trial.

"9th. That under said enactments and said decision the said laintiff has begun and is prosecuting this suit without any ight to or interest therein, except what said enactment and aid decision confer.

"10th. That under said law and said decision persons who are harged with being engaged in the saloon business are guilty f maintaining a nuisance — thereby are, and their property is, liscriminated against in being deprived of the same mode of rial that persons charged with maintaining other nuisances

Digitized by Google

in violation of law are allowed, and other and different and more onerous penalties and punishment are imposed against them and against their property than are denounced against persons charged with maintaining other kinds of nuisances.

"11th. That under said law, and especially § 1526, as amended, of the Code of Iowa, petitioners are denied the right to manufacture or sell beer or other manufactured liquors for any purpose whatsoever on account of their occupation, while persons engaged in other occupations are allowed to engage in such sales.

"12th. That said law and said decision are in derogation of the rights of defendants as guaranteed by the Constitution of the United States, and especially as guaranteed by the 14th Amendment thereof, and defendants are thereby denied the equal protection of the laws of said State of Iowa, and are deprived, and liable to be deprived, of liberty and property without due process of law.

"13th. That by said law and said decision they are denied in these proceedings in the State court the equal protection of the laws of Iowa as guaranteed by said Constitution of the United States and said amendment and by the laws of Congress, as passed for their protection.

"14th. That said laws, so passed by the said 20th General Assembly of Iowa, are null and void as being contrary to the said 14th Amendment of the Constitution of the United States and the laws made in pursuance thereof, but the Supreme Court of the State of Iowa has refused so to declare, holding the same binding and of full force.

"Therefore defendants offer, as provided by law, to file copies of all pleadings and proceedings herein in the circuit court of the United States for the Northern District of Iowa, Eastern Division, on the first day of its next term, and to file a bond, conditioned as provided by law, if such bond be demanded, and pray that this suit, which arises under the Constitution and laws of the United States, and the present being the first term at which said suit could be tried, and is also removable under § 641 of the Revised Statutes of the United States, may be removed into the next term of the Circuit Court of the United States for the Northern District of Iowa, Eastern Division."

Digitized by Google

The following is a transcript from the record of the proceedings in the Circuit Court of the United States for the Northern District of Iowa on the 1st day of February, 1886, touching this cause:

"This day this cause coming on to be heard, upon the motion of complainant to remand the same to the State court, the complainant, having, by leave of court heretofore made, filed his amendment to his bill of complaint, and the defendant, by leave of court heretofore given, having filed his amended petition for removal of said cause into this court, and the court having read as well the amended pleadings of plaintiff and the amended petition for removal of defendant, and having considered the same, and having heard the said parties by their respective counsel, and being fully advised, grants said motion to remand made by said plaintiff, upon the ground that there is no Federal question involved in said cause. It is therefore ordered, adjudged, and decreed that said cause be remanded to the district court in and for Dubuque county, Iowa, from which it came, and that plaintiff recover his costs in this court against defendants; to all of which the defendants, by their counsel, then and there excepted.

"And thereupon the defendants, in open court, file their petition for appeal to the Supreme Court of the United States from said decree and present for approval their supersedeas bond.

"The court, after argument by counsel for the respective parties, being fully advised, allows said appeal to the Supreme Court and approves said supersedeas bond, which is done accordingly."

On the docketing of the cause here, the appellee moved to dismiss the appeal, and united with this motion a motion to affirm the order of the Circuit Court remanding the cause.

Mr. S. P. Adams, *Mr. Jed Lake*, and *Mr. M. H. Beach* for the motion.

Mr. H. B. Fouke opposing.

Mr. Chief Justice Waite announced that the decree below was

Affirmed by a Divided Court.

Digitized by Google

Syllabus.

O'Malley v. *Farley*. Appeal from the Circuit Court of the United States for the Northern District of Iowa. This cause was submitted with *Schmidt* v. *Cobb*, by the same counsel. It involved the same principles, and, like that case, was

Affirmed by a Divided Court.

NEW YORK, LAKE ERIE, AND WESTERN RAILROAD *v.* NICKALS.

APPEAL FROM THE CIRCUIT COURT OF THE UNITED STATES FOR THE SOUTHERN DISTRICT OF NEW YORK.

Argued November 1, 2, 1886. — Decided November 29, 1886.

The Erie Railway Company, being embarrassed and in the hands of a receiver, appointed in a suit for the foreclosure of two of the mortgages upon the property of the company, its creditors and its shareholders, preferred and common, entered into an agreement for the reorganization of the company, to be accomplished by means of a foreclosure. Among other things it was agreed that there should be issued "preferred stock, to an amount equal to the preferred stock of the Erie Railway Company now outstanding, to wit, eighty five thousand three hundred and sixty nine shares, of the nominal amount of one hundred dollars each, entitling the holders to non-cumulative dividends, at the rate of six per cent. per annum, in preference to the payment of any dividend on the common stock, but dependent on the profits of each particular year as declared by the board of directors." The mortgage was foreclosed, and a new company was organized, and the new preferred stock was issued as agreed. The directors of the new company reported to its share and bond holders that during and for the year ending September 30, 1880, the operations of the road left a net profit of $1,790,620.71, which had been applied to making a double track, and other improvements on the property of the company. A, a preferred stockholder, on behalf of himself and other holders, filed a bill in equity to compel the company to pay a dividend to the holders of preferred stock. *Held*, That while the preferred stockholders are entitled to a six per cent. dividend in advance of the common stockholders, they are not entitled, as of right, to dividends, payable out of the net profits accruing in any particular year, unless the directors declare or ought to declare a dividend payable out of such profits; and that whether a dividend should be declared in any year, is a matter belonging in the first instance to the directors to determine, with reference to the condition of the company's property and affairs as a whole.

Digitized by Google

Argument for Appellants.

This was a bill in equity brought by a holder of preferred stock of the New York, Lake Erie, and Western Railroad Company, on behalf of himself and other stockholders, to compel the company to declare and pay a dividend to the preferred stockholders out of the net profits from the operations of the company during the year ending September 30, 1880. Decree below in favor of complainants, from which respondent appealed. The case is stated in the opinion of the court.

Mr. W. D. Shipman and *Mr. Benjamin H. Bristow* (*Mr. David Willcox* was with *Mr. Bristow* on his brief), for appellant, cited: *Williston* v. *Michigan Southern Railroad*, 13 Allen, 400; *Taft* v. *Providence & Fishkill Railroad*, 8 R. I. 310; *St. John* v. *Erie Railway*, 10 Blatchford, 271; *S. C.* 22 Wall. 136; *Warren* v. *King*, 108 U. S. 389; *Clearwater* v. *Meredith*, 1 Wall. 25; *Union Pacific Railroad* v. *United States*, 99 U. S. 402; *Barnard* v. *Vermont & Massachusetts Railroad*, 7 Allen, 512; *Verplanck* v. *Mercantile Ins. Co.*, 1 Edw. Ch. 84; *Butts* v. *Wood*, 38 Barb. 181; *Luling* v. *Atlantic Ins. Co.*, 45 Barb. 510; *S. C.* 50 Barb. 520; *S. C.* 51 N. Y. 207; *Boardman* v. *Lake Shore Railway*, 84 N. Y. 157; *Karnes* v. *Rochester & Genessee Railroad*, 4 Abbott's Pr. N. S. (N. Y.) 107; *Dent* v. *London Tramways Co.*, L. R. 16 Ch. Div. 344; *Richardson* v. *Vermont & Massachusetts Railroad*, 44 Vt. 613; *Hill* v. *Newichawanick Co.*, 8 Hun, 459; *S. C.* 71 N. Y. 593; *Spear* v. *Hart*, 3 Robertson, 420; *Culver* v. *Reno Real Estate Co.*, 91 Penn. St. 367; *Stevens* v. *South Devon Railway*, 9 Hare, 313; *Brundage* v. *Brundage*, 60 N. Y. 544; *Lombardo* v. *Case*, 45 Barb. 95; *Hopper* v. *Sage*, 47 N. Y. Superior Ct. 77; *Bright* v. *Lord*, 51 Ind. 272; *Chaffee* v. *Rutland Railroad*, 55 Vt. 110; *McGregor* v. *Home Ins. Co.*, 6 Stewart (33 N. J. Eq.), 181; *Elkins* v. *Camden & Atlantic Co.*, 9 Stewart (36 N. J. Eq.), 233; *Lockhart* v. *Van Alstyne*, 31 Mich. 76; *Mumma* v. *Potomac Co.*, 8 Pet. 281; *Curran* v. *Arkansas*, 15 How. 304; *Railroad Co.* v. *Howard*, 7 Wall. 392.

Digitized by Google

Mr. C. E. Tracy, for appellee, cited: *Bates* v. *Androscoggi Railroad*, 49 Maine, 491; *Boardman* v. *Lake Shore Railroad* 84 N. Y. 157; *Prouty* v. *Michigan Southern Railroad*, 1 Hun 655; *S. C.* 85 N. Y. 272; *Henry* v. *Great Northern Railway* 4 Kay & Johns. 1; *Matthews* v. *Great Northern Railway*, 5 Jurist, N. S., Part 1, 284; *Allen* v. *Londonderry & Ennis killen Railway*, 25 Weekly Reporter, 524; *Dent* v. *London Tramways Co.*, L. R. 16 Ch. Div. 344, 353; *Barnard* v. *Vermont & Massachusetts Railroad*, 7 Allen, 512; *Richardson* v *Vermont & Massachusetts Railroad*, 44 Vt. 613; *Westchester & Philadelphia Railroad* v. *Jackson*, 77 Penn. St. 321; *Scot* v. *Eagle Fire Ins. Co.*, 7 Paige, 198.

Mr. Justice Harlan delivered the opinion of the court.

By the decree below it was adjudged, in accordance with the prayer of the bill, that the New York, Lake Erie and Western Railroad Company was required by its articles of association to declare a dividend of six per cent. upon its preferred stock, for the year ending September 30th, 1880, payable out of the net profits accruing that year from the use of its property, after meeting operating expenses, interest on funded debt, rentals of leased lines, and other fixed charges. A judgment was rendered against it for $20,280 — the amount which the plaintiffs would have received if a dividend had been made — with interest thereon from January 15, 1881, to the date of the decree, and also for their costs and disbursements. The cause was referred to a special commissioner to ascertain the names of all other parties entitled to receive similar dividends.

The case made by the pleadings, exhibits, and proofs, is substantially, as will now be stated.

The Farmers' Loan and Trust Company having commenced an action in the Supreme Court of New York for the foreclosure of two mortgages executed by the Erie Railway Company upon its line of railway, property, rights, privileges, and franchises — one of September 1, 1870, to secure its obligations known as first consolidated mortgage bonds and sterling loan bonds, and the other of February 4, 1874, to secure its

Digitized by Google

obligations known as second consolidated mortgage bonds and gold convertible bonds — and having also brought ancillary suits for the foreclosure of the same mortgages in the States of New Jersey and Pennsylvania, certain parties, on the 14th of December, 1877, entered into a plan and agreement for the readjustment of their rights in the mortgaged premises upon an equitable basis. Those constituting in that agreement the parties of the first part were holders of common and preferred stock of the Erie Railway Company, of coupons of the first consolidated mortgage and sterling loan bonds, and of bonds and coupons both of the second consolidated mortgage and gold convertible series. The parties of the second part, Edwin D. Morgan, John Lowber Welsh, and David A. Wells, were purchasing trustees. The agreement provided for coöperation in all proceedings for final foreclosures and sales in the respective States under the mortgage of February 4, 1874; for the purchase of the mortgaged premises and franchises by the trustees with bonds and coupons and other means to be placed at their disposal for that purpose by the parties of the first part; and for the organization by such trustees, in conformity with the laws of New York, of a new corporation, with an amount of stock not exceeding the then amount of the stock of the Erie Railway Company, and which should hold the property, rights, and franchises so purchased, subject to six prior mortgages then resting upon the premises or upon part of them, including the first consolidated mortgage of September 1, 1870. The new corporation was required, as the consideration for the property, rights, and franchises purchased, to deliver to the parties of the first part its funded coupon bonds, bearing interest at seven per cent. in gold, to an amount equal in the aggregate to the coupons of the first consolidated mortgage to be funded by those parties; mortgage bonds, bearing six per cent. interest in gold, to an amount equal to the principal of the second consolidated and gold convertible bonds held by the parties and secured by the mortgage of February 4, 1874 — the back interest to be represented by funded coupon bonds. In reference to the sterling loan bonds, the agreement provided that they should be regarded as having been ex-

Digitized by Google

changed for the first consolidated mortgage bonds on the 1st of September, 1875, the coupons due on that day being funded at the rate of six per cent. per annum as it stood previous to such assumed exchange.

The provisions of the plan and agreement which bear more or less upon the question before the court, are as follows:

"13. Preferred stock, to an amount equal to the preferred stock of the Erie Railway Company now outstanding, to wit, eighty five thousand three hundred and sixty nine (85,369) shares, of the nominal amount of one hundred dollars each, entitling the holders to non-cumulative dividends, at the rate of six per cent. per annum, in preference to the payment of any dividend on the common stock, but dependent on the profits of each particular year, as declared by the board of directors.

"14. Common stock, to an amount equal to the amount of the common stock of the said company now outstanding, to wit, seven hundred and eighty thousand shares, of the nominal amount of one hundred dollars each."

"18. Preferred stock of the old company, in respect of which three dollars gold for each share has been or may be paid, and common stock of the old company, in respect of which six dollars gold per share has been paid or may be paid, may be exchanged for the new stock, in paragraphs 13 and 14 mentioned, share per share, preferred for preferred, and common for common, without any liability to make any further payment in respect of such new stock: *Provided, however,* That such new stock, whether common or preferred, shall be issued and held in conformity with and subject to the trust for voting hereinafter mentioned.

"19. In addition to the new common and preferred stock, the parties of the first part shall also receive for the amount of such payments, as mentioned in the last preceding paragraph, non-cumulative income bonds, without mortgage security, payable in gold, in London and New York, on the first day of June, 1977, and bearing interest from December 1, 1879, also payable in gold, in London and New York, at the rate of six per cent. per annum, or at such lesser rate for any

Digitized by Google

iscal year as the net earnings of the company for that year, s declared by the board of directors and applicable for the urpose, shall be sufficient to satisfy; these bonds to have early coupons attached.

"20. Preferred stock, in respect of which two dollars gold er share has been paid or may be paid, and common stock, n respect of which four dollars gold per share has been or nay be paid, may be exchanged share for share, but in conormity with and subject to the said trust for voting, for new tock of like class, without any liability to make any further ayment in respect of such new stock; but no income bonds r other obligation or security shall be issued or delivered in espect of such reduced payments.

"21. . . . ; and all payments made or to be made in espect of old, preferred or common stock shall be deemed to e in consideration of the concessions and agreements made y the holders of the said first and second consolidated mortage and gold convertible bonds, the available funds resulting rom such concessions being used for the improvement or ncrease of the property of the new company.

"22. The stock of the new company, both common and referred, not required for exchange as above provided, may, ith the consent of the parties of the first part, but not otherise, be issued and disposed of by the company for its own enefit, at such rates and upon such terms as to the said comany may seem proper. All moneys which have been or may ereafter be paid in respect of stock as above set forth, and hich shall not be required for the purpose of carrying into xecution this plan and agreement, shall be expended for the enefit of said new company, or in the improvement or ncrease of its property, under the direction of the parties of ie first part, and any balance not so expended shall be paid ver to the said new company."

The property and franchises in question were sold under ecrees of foreclosure on the 24th of April, 1878, and were urchased by the trustees, subject to the before mentioned six ortgages. Immediately thereafter, on April 26th, 1878, the urchasing committee and their associates organized the New

Digitized by Google

York, Lake Erie and Western Railroad Company, in conformity with statutes providing for the reorganization of railroads sold under mortgage, and for the formation in such cases of new companies. Laws of N. Y., 1874, c. 430; 1876, c. 446. The provisions of the before mentioned plan and agreement were set out in the articles of association. On the 9th of December, 1880, the board of directors submitted to shareholders and bondholders a report of the operations of the new company for the fiscal year ending September 30, 1880, from which it appears that the gross earnings for that year were $18,693,108.86, while the operating expenses were $11,643,925.35, leaving $7,049,183.51 as "net earnings from traffic." To this sum the report adds $783,956.65 "as earnings from other sources," making $7,833,140.16 as the total earnings for the year in question. From the last sum, $6,042,519.45 were deducted for "interest on funded debt, rentals of leased lines, and other charges," leaving, in the language of the report, "a net profit from the operations of the year of $1,790,620.71." Referring to the latter sum, the report continues: "This amount, together with $737,119.34 received during the year from the assessments paid on the stock of the Erie Railway Company, has been applied to the building of double track, erection of buildings, providing additional equipment, acquiring and constructing docks at Buffalo and Jersey City, and to the addition of other improvements to the road and property."

The theory of the present suit is that the sum of $1,790,620.71 — ascertained to be the "net profit" derived from the operations of the company for the fiscal year ending September 30, 1880, after paying operating expenses and fixed charges — constituted a fund applicable, primarily, to the payment of a six per cent. dividend upon preferred stock. The use of that fund for any other purpose was, it is claimed, a breach of trust on the part of the company and a violation of rights secured to preferred stockholders, both by the plan and agreement of December 14, 1877, and by the company's articles of association. On the day the directors made their report to shareholders, they declared, by resolution, that in the then condition

Digitized by Google

of the company's property, they did not "deem it wise or expedient to declare a dividend upon its preferred stock." It also clearly appears in evidence that the earnings for the year in question, after paying operating expenses, and fixed charges, together with the amount realized from assessments paid on stock, were, in good faith, used in improving the company's road and other property; that these improvements were in pursuance of a general plan marked out pending negotiations for reorganization; that the estimate of their extent and cost was made with reference to a general understanding that they would be commenced and carried to completion as rapidly as possible with money derived from assessments on stockholders, from concessions of interest by bondholders, from earnings of the company, and from other sources; that the capacity of the company to make earnings with less expense than formerly in proportion to service rendered, and therefore its ability to earn the net profit which it did in 1880, was due to the bettered condition of the road and its equipment arising from these improvements, "thus, in the increase of traffic, and in the reduction of expenses, producing this result of $1,790,-620.71." The testimony of Mr. Jewett, the president of the company, which is uncontradicted by any evidence in the record, is that the use of that fund in the way in which it was applied was imperatively demanded by the interests as well of creditors, shareholders, and bondholders, as of the public. In answer to the question, whether these expenditures increased the earning capacity of the road and diminished relatively the expense of doing business, he said: "In my judgment, if these improvements had not been made, and most judiciously made, the company could not have paid its fixed charges; *it would have again gone into bankruptcy and the entire interest of the stockholders been destroyed.*"

The court below adjudged, in effect, that the right to a dividend, for the year ending September 30, 1880, payable out of the "net profit" arising from the operations for that period, was absolutely secured to preferred stockholders both by the plan and agreement and by the articles of association. Such, it held, was the contract between the company and

Digitized by Google

the preferred stockholders, which the court was not at liberty to disregard. This, in our judgment, is an erroneous interpretation of both the agreement and the company's charter. There is nothing in the language of either necessarily depriving the directors of the discretion with which managing agents of corporations are usually invested, when distributing the earnings of property committed to their hands. As was said by the court, in *Clearwater* v. *Meredith*, 1 Wall. 25, 40, "when any person takes stock in a railroad corporation he has entered into a contract with the company that his interests shall be subject to the direction and control of the proper authorities of the corporation, to accomplish the object for which the company was organized." The directors of such corporations, having opportunities not ordinarily possessed by others of knowing the resources and condition of the property under their control, are in a better position than stockholders to determine whether, in view of the duties which the corporation owes to the public, and of all its liabilities, it will be prudent in any particular year to declare a dividend upon stock. While their authority in respect of these matters may, of course, be controlled or modified by the company's charter, and while the power of the courts may be invoked for the protection of stockholders against bad faith upon the part of the directors, we should hesitate to assume that either the legislature or the parties intended to deprive the corporation, by its managers, of the power to protect the interests of all, including the public, by using earnings when necessary, or when, in good faith, believed to be necessary, for the preservation or improvement of the property intrusted to its control.

The claim of the appellees is based mainly on the 13th article of the agreement of 1877. It is contended that, as the non-cumulative dividend to which preferred stockholders were entitled was "dependent on the profits of each particular year, as declared by the board of directors," the intention was to require the declaration and payment of a *dividend* in every year when it should be officially declared that there were net profits from the operations of that year.

It is not without significance that the words just quoted

Digitized by Google

rom the preliminary agreement for organization are omitted rom that paragraph of the articles of association which, in bedience to the requirement of the statute, Laws of 1876, . 446, § 1, sub-div. 2, specifies the rights of each class of tockholders. That paragraph provides that the holders f preferred stock shall be entitled to "non-cumulative divilends at the rate of six per cent. per annum in preference o the payment of any dividend on common stock." The mission, in that connection, of the words "but dependent on he profits of each particular year, as declared by the board f directors," gives some force to the suggestion of counsel hat the contemporaneous construction of those words by the arties was, that they conferred no such right upon preferred tockholders as they now claim. Independently of this view, e are of opinion that the contention of appellees is not susained by a reasonable construction of the agreement. That nstrument did, indeed, provide for preferred shareholders eing paid a dividend of six per cent. before any dividend was aid to common shareholders. But it was not intended to onfer upon the former an absolute right to a dividend in any articular year, dependent alone on the fact, or the official scertainment of the fact, that there were profts in that year, fter paying operating expenses and fixed charges. The ords of the 13th article "as declared by the board of direcors" do not qualify the words "dependent on the profits for ach particular year." They should rather be read in connecon with the preceding words, "non-cumulative dividends, at e rate of six per cent. per annum, in preference to the payent of any dividend on the common stock." Preferred ockholders of the old company, receiving in exchange prerred stock in the new company, did not thereby become editors of the latter. Their payments on account of old ock were in consideration of the concessions and agreements ade by bondholders. In certain circumstances they also ceived income bonds. They were stockholders in the old rporation, and they held that relation to the reorganized mpany. What was stipulated to be paid to them as holders preferred stock in the new company was not a *debt*, payable

Digitized by Google

in every event out of the general funds of the corporation but a *dividend*, "as declared by the board of directors," and payable out of such portion of the profits as should be set apart for distribution among shareholders; non-cumulative because "dependent on the profits of each particular year," and not to be fastened on the profits of succeeding years. That the parties contemplated a declaration of a dividend, and not a mere statement of net profits during a designated period is made evident by the requirement that "dividends" to preferred stockholders should be paid "in preference to the payment of any dividend on the common stock." This language is not consistent with the theory that the holders of preferred stock were entitled to six per cent. thereon simply because there were profits, and irrespective of any declaration of a dividend. A declaration of profits, as, in itself, and without further action by the directors, entitling shareholders to dividends, is unknown in the law or in the practice of corporations. Dividends are "declared" by some formal act of the corporation — the question whether there are or are not profits being settled entirely by the accounts of the company as kept by subordinate officers, not by the mere statement of directors as to what appears upon its books.

A different view would lead to results which sound policy would seem to forbid, and which, therefore, it is not to be supposed were contemplated by the parties. For, if preferred stockholders become entitled to dividends upon a mere ascertainment of profits for a particular year, the duty of the company to maintain its track and cars in such condition as to accommodate the public and provide for the safe transportation of passengers and freight would be subordinate to their right to payment out of the funds remaining on hand after meeting current expenses and fixed charges. Indeed, there is some ground to contend that, according to appellees' interpretation of the charter, the directors were not at liberty, in any year when the current receipts were in excess of operating expenses, to pay even interest on funded debt, or rentals of leased lines, before paying a dividend on preferred stock. We are of opinion that while the agreement of 1877 and the articles of asso-

Digitized by Google

ciation sustain the claim of preferred stockholders to a six per cent. dividend in advance of common stockholders, the former are not entitled, of right, to dividends, payable out of the net profits accruing in any particular year, unless the directors of the company formally declare, or ought to declare, a dividend payable out of such profits; and whether a dividend should be declared in any year is a matter belonging in the first instance to the directors to determine, with reference to the condition of the company's property and affairs as a whole. As the evidence shows that the profits for the year ending September 30, 1880, were applied to objects that were legitimate and proper, and as the condition of the company was not such as to make the declaration of a dividend a duty upon the part of the directors, we perceive no ground upon which the claim of the appellees can be sustained.

Attention is called by counsel to the language of the 19th article of the plan and agreement of reorganization, as throwing some light on the true interpretation of the 13th article. We do not think that that article aids the contention of appellees. The non-cumulative income bonds, provided for in the 19th article, were to bear six per cent. interest, or such lesser rate, "for any fiscal year, as the net earnings of the company for that year, as declared by the board of directors and applicable for the purpose, shall be sufficient to satisfy." So far from these words aiding the contention of appellees, they tend to show that the directors had the right to determine whether the condition of the company did not require a reduction of the interest. Such, we think, is the meaning of the words "and applicable for the purpose." The applicability of net earnings for interest on such income bonds could only be determined by them.

A case very much resembling this is *St. John* v. *Erie Railway Co.*, 22 Wall. 136, 147. Certain creditors of that company received preferred stock, in lieu of payment of their debts, under a clause of its charter providing that such stock should be entitled "to preferred dividends out of the net earnings of said road (if earned in the current year, but not otherwise), not to exceed seven per cent. in any one year, payable semi-annu-

Digitized by Google

ally, after payment of mortgage interest and delayed coupons in full." A preferred stockholder sought by suit to enforce full payment of his dividends from the net earnings, prior to any payment on account of new leases of roads, or of debts subsequently contracted for borrowed money used in the repair and equipment of the road, in paying rent on leased lines, and interest on the money so borrowed. The Circuit Court, 10 Blatchford, 271, 276, said: "What it (the stock) is entitled to is 'dividends,' and only 'dividends,' and they are of a defined and special character. It is entitled to nothing else. It has no privilege or priority by reason of being preferred stock, except in reference to stock that is not so preferred, that is, common stock. In reference to such common stock the preferred stock is entitled to its specified preferential dividends, and is not entitled to anything else in reference to anything." Upon appeal to this court it was held that the suit could not be maintained; that the takers of the preferred stock had abandoned their position as creditors and assumed that of stockholders, in which capacity they could claim dividends only when they were declared or should be declared; that they were only entitled to dividends out of the net earnings of the principal road and its adjuncts accruing in the current year; that, as the company had not agreed to be limited in the exercise of its faculties and franchises, it had the right to conduct its operations in good faith as it might see fit; and that the materials for the computation of its net earnings in any particular year were to be derived from all of its operations, viewing its business as a unit, and not from a part of its operations, or without reference to the necessary and legitimate purposes to which its current receipts might be applied for the benefit of all interested in the property. These principles were again applied in the analogous case of *Warren* v. *King*, 108 U. S. 389. See also *Union Pacific Railroad* v. *United States*, 99 U. S. 402; *Barnard* v. *Vermont and Massachusetts Railroad*, 7 Allen, 512; *Williston* v. *Michigan Southern Railroad*, 13 Allen, 400; *Chaffee* v. *Rutland Railroad*, 55 Vt. 110; *Taft* v. *Hartford, Providence, & Fishkill Railroad*, 8 R. I. 310; *Elkins* v. *Camden & Atlantic Co.*, 36 N. J. Eq. (9 Stewart) 233;

Digitized by Google

Lockhart v. *Van Alstyne*, 31 Mich. 76; *Culver* v. *Reno Real Estate Co.*, 91 Penn. St. 367.

The views we have expressed are not inconsistent with the adjudged cases upon which appellees' counsel chiefly rely. A brief reference to some of them will be sufficient. In *Dent* v. *London Tramways Co.*, 16 Ch. Div. 344, decided by Sir George Jessel, Master of the Rolls, at special term, the company increased its capital stock by an issue of shares of the same denomination as the prior shares, "bearing a preferential dividend of six per cent. per annum over the present shares of the company, dependent upon the profits of the particular year only." There the question was whether the company was bound to pay preferred stockholders the amount of a dividend declared for the half year ending December 31, 1878, but which it had refused to pay, and also a dividend for the year 1879, which, it is to be inferred from the report of the case, ought to have been declared. The precise point determined is shown in these remarks of the court: "The argument of the company amounts to this, that inasmuch as they have improperly paid to their ordinary shareholders very large sums of money which did not belong to them, they, the company, are entitled to make good that deficiency by taking away the fund available for the preference shareholders, to an amount required to put the tramway in proper order. When the argument is stated in that way, it is clear that it cannot be sustained. The company either have a right to recover back from the ordinary shareholders any sum over-paid, or not. If they have a right, they must recover them; if they have no right to recover them, *a fortiori* they have no right to recover them from the preference shareholders, and, of course, still less right to take away the dividends from the preference shareholders."

It is scarcely necessary to say that the present case is entirely different from the one decided by the English court. No question was raised in the latter as to the authority and discretion of directors to use earnings for the improvement of the corporate property from year to year. It was, in effect, a contest simply between preferred and common stockholders.

Digitized by Google

The only point decided was, that the payment of large sums of money to common stockholders which should have been used in the repair of the tramway, was not a valid ground for refusing to pay preferred stockholders dividends to which they were entitled. To withhold dividends from preferred stockholders, in order to make good a deficiency caused by payments to common shareholders which ought not to have been made, was practically to destroy the right of preference. A different decision would have made the preferred shareholders pay what the company should have recovered from the common stockholders by suit.

The case of *Richardson* v. *Vermont & Massachusetts Railroad*, 44 Vt. 613, 622, is also relied upon to support the decree below. There the question was as to the right to recover interest dividends on stock, to be paid in full at a specified date if there was then sufficient money in the company's treasury. If there was not enough for that purpose, then as much should be paid as the amount in the treasury justified; the balance when the treasurer was able to make payment. The defence was that there was an adequate remedy at law and that the stock certificates were void. The certificates were held to be valid, the right to resort to equity was sustained, and the company was required to pay. The vital fact in that case distinguishing it from this one is, that the company substantially admitted that it had funds applicable to the payment of the claims, if they should be held to be valid. Some of the general observations of the court seem to be in accord with the views we have expressed. "The mere fact," the court said, "of the corporation having funds in its treasury sufficient in amount to pay the orators, would not be sufficient to show the *ability of the corporation* contemplated in the vote and certificates. That ability must consist of a fund adequate not only for the payment of the claims of the plaintiffs in the cause, but for the payment of all other stockholders having like claims; and must be a surplus fund over and above what is requisite for the payment of the current expenses of the business, for discharging its duties to creditors, and over and above what reasonable prudence would require to be kept in the treasury to

Digitized by Google

meet the accidents, risks, and contingencies incident to the business of operating the railroad. In other words, there must be such pecuniary ability as would, but for the obligation to pay this interest, justify the payment of a dividend to stockholders."

Our attention is also called to the case of *Boardman* v. *Lake Shore & Michigan Southern Railway*, 84 N. Y. 157. But it has no direct bearing on the questions before us. It only decides that the dividends provided for in the contract there in question were not only to be preferred, but, being guaranteed, were cumulative, and a specific charge upon the accruing profits, to be paid, as arrears, before any other dividends were paid on the common stock. "The doctrine," said the court, "that preference shareholders are entitled to be first paid the amount of dividends guaranteed, and of all arrears of dividends or interest, before the other shareholders are entitled to receive anything, and, although they can receive no profits where none are earned, yet as soon as there are any profits to divide they are entitled to the same, is fully supported by authority." It thus appears that that was a contest between preferred and common stockholders. No questions arose as to whether the company, under the circumstances, could or could not, in their discretion, have withheld a declaration of dividend.

Without further discussing the questions involved or suggesting other grounds upon which our conclusion might rest, we are satisfied that the complainants are not entitled to recover.

The decree is reversed, and the cause is remanded, with directions to dismiss the bill.

Digitized by Google

WOOD *v.* FORT WAYNE.

ERROR TO THE CIRCUIT COURT OF THE UNITED STATES FOR THE DISTRICT OF INDIANA.

Argued November 16, 1886. — Decided December 6, 1886.

In this case, the court construed the language of a written contract for supplying materials and labor in constructing water works for the city of Fort Wayne, Indiana, in regard to extra work, and an increase in the quantity of work, caused by an alteration of plan; and in regard to defects in materials furnished by the city, causing delay and expense to the contractor; and reversed the judgment of the Circuit Court because of an erroneous construction by it of such language.

This was an action brought by plaintiffs in error (who were plaintiffs below) to recover from defendant the cost of certain materials and work connected with the furnishing and laying of water pipes for the water works of the city. The case is stated in the opinion of the court.

Mr. John Rodman Paul and *Mr. George W. Biddle*, for plaintiff in error, cited: *Springfield* v. *Harris*, 107 Mass. 532; *Dermott* v. *Jones*, 23 How. 220; *Dermott* v. *Jones*, 2 Wall. 1; *Manufacturing Co.* v. *United States*, 17 Wall. 592; *Adams* v. *Cosby*, 48 Ind. 153; *Shillington* v. *Templeton*, 66 Ind. 585; *Dubois* v. *Del. & Hud. Canal Co.*, 12 Wend. 334; *Bestor* v. *United States*, 3 C. Cl. 425; *Messenger* v. *Buffalo*, 21 N. Y. 196; *Emerson* v. *Slater*, 22 How. 28; *Canal Co.* v. *Ray*, 101 U. S. 522; *Munroe* v. *Perkins*, 9 Pick. 298; *S. C.* 20 Am. Dec. 475; *Williams* v. *Bank of United States*, 2 Pet. 96; *Swain* v. *Seamens*, 9 Wall. 254; *Ins. Co.* v. *Norton*, 96 U. S. 234; *Ins. Co.* v. *Eggleston*, 96 U. S. 572; *Ins. Co.* v. *Doster*, 106 U. S. 30; *Rhodes* v. *Thomas*, 2 Ind. 638; *Bates* v. *Dehaven*, 10 Ind. 319; *Billingsley* v. *Stratten*, 11 Ind. 396; *Smith* v. *Gugerty*, 4 Barb. 614; *Grant* v. *United States*, 5 C. Cl. 71; *Wolcott* v. *Wolcott*, 19 Vt. 37; *Jefferson County* v. *Slagle*, 66 Penn. St. 202; *Heald* v. *Cooper*, 8 Maine, 32.

Digitized by Google

Mr. L. M. Ninde, for defendant in error, cited: *Crosby* v. *Vood*, 6 N. Y. 369; *Reynolds* v. *Nugent*, 25 Ind. 328; *Bartt* v. *Wyman*, 14 Johns. 260; *Deacon* v. *Gridley*, 15 C. B. 95; *Mallalien* v. *Hodgson*, 16 Q. B. 689; *Conover* v. *Stillwell*, 4 N. J. L. (5 Vroom), 54; *Cobb* v. *Cowdery*, 40 Vt. 25; *Ford* *Garner*, 15 Ind. 298; *Runnamaker* v. *Cordray*, 54 Ill. 303; *ngle* v. *Jones*, 2 Wall. 763; *Clark* v. *New York*, 4 N. Y. 38; *S. C.* 53 Am. Dec. 379.

Mr. Justice Blatchford delivered the opinion of the court.

This is an action at law, brought October 26th, 1881, in the ircuit Court of the United States for the District of Indiana, y Richard Wood and others, partners, doing business as R. . Wood & Co., in Philadelphia, Pennsylvania, against the ty of Fort Wayne, a municipal corporation in Indiana, to ecover damages for the alleged breach by the latter of a ritten agreement made between it and the plaintiffs, on the 0th of September, 1879, in reference to the construction by e latter of water works in the city of Fort Wayne. The greement was made between the city, by its "trustees of ater works," of the first part, and R. D. Wood & Co., of e second part, and bore the seal of the city, and the statenent that it was "approved by the City Council, September 5th, 1879," signed by the clerk.

By the contract, the party of the second part agrees, for e consideration mentioned in it, "to do all the work and rnish all the materials called for by this agreement, and in rict accordance with the specifications and requirements as ereinafter set forth. And that the said city shall have the ght to appoint such civil engineer, and inspectors under him, s the trustees of water works may deem advisable; and that id engineer shall determine the amount of work and mateials to be paid for under this contract, decide all questions elative to the execution thereof, and his estimate and decision hall be final and conclusive. The whole to be in accordance ith the preceding proposal signed by the said second party, nd conformably to the following specifications, both of which

Digitized by Google

are to be mutually considered, as to all expressions, intents and purposes, as a part of this contract."

The material parts of the agreement, out of which the questions involved in the suit arise, are as follows:

"Specifications. The work to be done consists in furnishing . . . cast-iron water-pipes," some "of sizes ranging from 24 inches to 4 inches diameter; . . . also, in trenches, laying pipes and special castings, including back filling, setting valves, constructing and setting valve-boxes vaults and covers, and setting hydrants, including all crossings of rivers and canals. . . .

"The delivery of the pipe shall commence on or before the first day of October, 1879, and be continued with regularity until the completion of the contract, which shall be on or before the first day of June, 1880. Special castings shall be delivered as may be required by the engineer. . . .

"Pipe-laying will consist in excavating and refilling trenches; in taking up and replacing pavements or other surfaces; in hauling and laying pipes, setting special castings, stop-cocks, air-cocks, check-valves, hydrants, and all other appurtenances incident to the pipe distribution; in cutting pipes, making joints, preparing foundations, building brick or stone vaults blow-off wells; in repairing damages caused to gas-pipes sewers, drains, and cisterns; in clearing the streets and grounds of all rubbish or refuse caused by the above work; in furnishing lead and gasket for joints, fuel for melting lead clay and rope for bands, blocks and wedges for use under pipes, wrought-iron straps for securing caps, reducers, and other parts liable to draw; in furnishing and setting or constructing boxes or vaults for stop-cocks, air-cocks, man-holes including furnishing and fitting cast-iron frames and covers thereto; in furnishing sand and all other materials for masonry, and all tools and labor necessary for the complete fulfilment of this contract. . . .

"The above work to be done in the city of Fort Wayne, Indiana, along the lines and in the streets, as indicated on the distribution map in the office of the trustees or city engineer's office, and in such other streets and places in said city as ma

Digitized by Google

be directed. The trenches for the pipes shall be opened in accordance with the lines and grades as given or directed by the engineer. . . .

"All pipes, special castings, stop-cocks, air-cocks, check-valves, and hydrants will be furnished to the contractor in the city pipe-yard, or on the cars upon which they are received from the foundry. They will be delivered to him as soon as received, and it shall be his duty to notify the engineer of any defects or breakage before removal from cars; otherwise, all damage arising from such cause shall be made good by said contractor. The contractor shall have no claim upon the city for any delay in the delivery of pipes or other materials from the manufacturers. . . .

"Stop-cocks, air-cocks, hydrants, special castings, and all other parts pertinent to the supply or distribution, shall be set or laid at the required points in such manner as the engineer may direct. . . .

"A box or vault, of wood or masonry, shall be furnished and set over each of the stop-cocks, and over each of the air-cocks and man-hole pipes, and the iron frames and covers shall be properly fastened to them. These boxes are to be made of the form and dimensions shown on the plans furnished, and approved by the engineer. . . .

"And the said party of the second part hereby agrees to receive, and the said first party hereby agrees to pay, the following prices as full compensation for the work contemplated in this contract:

"(1.) For laying the pipes and all special castings appertaining thereto, setting check-valves, stop-cocks, and air-cocks, including the excavation and refilling of trenches; all bailing, and shoring, and ramming; the taking up and replacing paving or other surface of the streets; the removal of all rejected or surplus materials from the grounds or streets; the repairing of damage caused to gas-pipes, sewers, drains, streets, cisterns, etc.; and the expense of avoiding such obstructions; the hauling of all pipes and other castings and appurtenances on to the grounds, and returning those not used to the pipe-yard; the furnishing of all blocks and wedges, and all materials for

Digitized by Google

making the joints; the cutting of pipes; and all other expenses of materials, tools, and labor required by the specifications and incident to this particular work; the lengths to be measured along the centre of the pipe, and in the case of branches as starting from the centre of the main pipe — twenty four inch pipe — the sum of sixty (60) cents per lineal foot. . . .

"(5.) For furnishing and setting all wooden stop-cock and air-cock boxes, including fitting and securing the iron covers, the sum of —— each; cost is included in price for pipe laying. . . .

"And it is hereby agreed that no claim for extra work shall be made or entertained, unless such extra work shall have been done in obedience to a written order of the engineer and trustees, and a stipulated price for same agreed upon, whenever such stipulation may be practicable. When otherwise, such claims to be made to the trustees in writing within ten days after the completion of such extra work, or before the payment of the next succeeding monthly estimate after such work is done, failing to do which all rights of the contractor to such extra pay shall be forfeited. . . .

"The said trustees shall have the right to make any alterations in the extent, dimensions, form, or plan of the work contemplated by this contract, either before or after the commencement of construction. If such alterations diminish the quantity of work, the price paid shall be proportionately diminished, and no anticipated profits allowed for the work omitted. If they increase the work, such actual increase to be paid for at contract rate for work of its class.

"All loss or damage arising out of the nature of the work aforesaid, or from the action of the elements, or from any unforeseen obstructions, or any difficulties that may be encountered in the prosecution of the same, also for all expenses which may be incurred in consequence of the temporary suspension of any part of said work, shall be incurred by the contractor without extra charge to said city."

The complaint sets forth a compliance by the plaintiffs with the contract, and the completion of the work September 1st, 1880, and the failure of the defendant to pay to them $4179.75 allowed by the contract to be retained by the defendant until six months after the completion of the work.

Digitized by Google

It also avers, in its second paragraph, that, before the contract was made, two agents of the plaintiffs were shown by the trustees a distribution map in the office of the city engineer, as indicating the lines and streets on which the pipes were to be laid, from which to make their bid for the work; that, before making their bid, they examined the map, and found that the main pipe leading from the pumping works to the reservoir was to cross the St. Mary's River on the line of Calhoun street; that they thereupon carefully examined the river-bed in the Calhoun-street line, and estimated that the crossing of the river at that place would cost only $500, which was a correct estimate of such cost; that the bid of the plaintiffs for the work and the contract was made with express reference to the crossing of the river at that place; that the contract expressly refers to such distribution map as showing the lines and the streets on which the work was to be done, it being the only distribution map then on file in the office of the trustees or in that of the city engineer; that, as the plaintiffs were about commencing the work, their agents were informed by the trustees and the engineer, that they had changed the plan of the work so as to make the crossing of the river on the line of Clinton street instead of Calhoun street, and the plaintiffs were ordered to make the crossing at Clinton street; that the plaintiffs, after their agents had examined the river-bed at the Clinton-street crossing, and had found that the water there was seven feet deep, (it being only about two feet deep at the Calhoun-street crossing,) and that the bed of the river was composed of quicksand, protested against the change, and declined to go on with the work unless they would be paid for the extra or additional cost of making the crossing at Clinton street, over the cost of making it at Calhoun street; that the trustees requested such agents not to make at that time any claim for extra work or extra pay for crossing the river, and insisted that the work should be proceeded with, promising that they would in future make it all right about such extra work; that such agents gave to the trustees notice in writing, that, by reason of such change, the plaintiffs would demand extra pay for crossing at Clinton

Digitized by Google

street equal to the difference in cost over crossing at Calhoun street; that, under the direction of the trustees and the engineer, the plaintiffs laid the main pipe across the river, on the new line, at an additional cost, over the cost of crossing at Calhoun street, of $4575; and that, within two days after the completion of the work of crossing the river, such agents made their claim in writing to the trustees for the extra work, with an itemized account of its cost, the whole cost being $5075, from which $500 was to be deducted, as the cost of crossing at Calhoun street, the item being, "Extra expense on river crossing with 24 inch pipe, caused by change of original plan, $4575."

The complaint also contains, in its third paragraph, the common counts, claiming $12,000 for work and labor done, materials furnished, personal property sold and delivered, and money paid, laid out, and expended. A bill of particulars under this paragraph claims, in addition to the $4575, these items: "Extra expense caused by special castings not fitting and delay in receiving same, in 20 inch line, $750; 149 wooden valve-boxes, difference between those furnished and those contracted for, at $3, $447."

The defendant demurred to the second paragraph of the complaint, but the demurrer was overruled. It then answered by a general denial and a plea of payment in full. It also set up a claim of $3000 against the plaintiffs for work done by the defendant which the plaintiffs were bound by the contract to do, but neglected to do.

As to the second paragraph of the complaint, the answer avers, that, when the contract was executed, it was stated to the plaintiffs, and agreed, that no map or plan of distribution of pipes had been made, but that the defendant's engineer Cook, would prepare such a map and plan and file it in the office of the trustees or in that of the city engineer; that such map and plan was to be the map and plan referred to in the contract, and was to designate the streets on which the pipes were to be laid, to all of which the plaintiffs then agreed; that Cook prepared a plan and map, and it was filed; that, when the plaintiffs commenced work, they inquired where the pipes

Digitized by Google

were to be laid, and the city engineer pointed out to them where the work was to be done, and, at their request, prepared a map and plan showing the manner in which the pipe was to be laid under the river on the line of Clinton street, which the plaintiffs accepted, and which was in accordance with Cook's map and plan; that the plaintiffs then commenced work on Clinton street, in excavating and laying pipes under the river, where it crossed Clinton street, and according to such working plan, without objecting; that it was no more difficult or expensive to lay the pipe under the river on Clinton street than it would have been to lay it under the river where the river crosses Calhoun street; and that any expenditure over $500, was the result of extravagance and unskilfulness.

As to the third paragraph of the complaint, the answer, in its sixth paragraph, avers that all the materials were furnished, and all the labor was performed, under the written contract, at prices specially set forth therein; that the contract price has been fully paid; and that no written order was made by the city engineer and the trustees, directing the plaintiffs to furnish any extra materials or do any extra work.

A motion by the plaintiffs to strike out the sixth paragraph of the answer was denied, and then the plaintiffs replied, denying generally the allegations of the answer.

The case was tried before a jury, who found a verdict for the plaintiffs, for $4100, being the amount agreed to be due to the plaintiffs, excluding the three above named items of $4575, $750, and $447, amounting to $5772; and a judgment for $4100, with interest and costs, was entered for the plaintiffs, to review which they have brought this writ of error.

The plaintiffs gave some evidence in support of the three items amounting to $5772, (the defendant introducing no evidence,) but the court declined to allow the plaintiffs to introduce further testimony in support of those items, "on the ground," as the bill of exceptions states, "that, notwithstanding the location of the crossing of the St. Mary's at Calhoun street, the defendant had a right, under its contract with the plaintiffs, to change the place of crossing to Clinton street, as it did, said contract securing to the defendant that right, and

Digitized by Google

that the plaintiffs had no right, under the contract between the parties, to claim anything on account of either of the three items." The court also struck out all of the plaintiffs' evidence, except the contract, in support of the three items, and instructed the jury to return a verdict for the plaintiffs for $4100. To these rulings and instruction the plaintiffs excepted. This action of the Circuit Court is assigned for error.

We are of opinion that the court erred in its view of the rights of the plaintiffs under the contract. The clause providing that no claim for extra work shall be made or entertained, unless such extra work shall have been done in obedience to a written order of the engineer and trustees, is an independent clause from that which provides that the trustees shall have the right to make any alterations in the plan of the work either before or after its commencement; and the extra work referred to in the former clause does not embrace work done in pursuance of an alteration made by the trustees in the plan. The latter work may be, in one sense, extra work, but if it results from an alteration of plan by the trustees, and there is in consequence, an increase in the quantity of work, the actual increase is to be paid for, at the "contract rate for work of its class." The extra work referred to in the former clause required the authoritative written order of the engineer and trustees; but, as the trustees had the right to alter the plan, work done to carry out such alteration, when made by the trustees, was authorized by the trustees, in a manner equivalent to a written order by them and the engineer. The change of plan involved in crossing at Clinton street, was authority for the additional cost of crossing there, without a written order.

The contract states that the work is to be done "along the lines and in the streets, as indicated on the distribution map." The plaintiffs gave evidence tending to show that the map which the plaintiffs' agents examined before making the contract did not then show a crossing at Clinton street; that the plaintiffs consequently based their estimates and bid on a crossing at Calhoun street; that the change by the trustees to Clinton street was notified to the plaintiffs on the day of

Digitized by Google

which the work on the river was to begin; that the map was subsequently marked with a crossing at Clinton street; and that the increased cost caused by the change was $4575. The contract expressly provides that, if the alteration of the plan increases the quantity of work, the actual increase shall be paid for by the city. The only measure of payment provided for is the "contract rate for work of its class." The price fixed in the contract, of 60 cents per lineal foot for laying 24 inch pipe, such as that used in crossing the river, was based on the obstructions and difficulties to be expected in crossing at Calhoun street, in two feet of water, the general price being based on the laying of the pipe on land, and the expense of crossing the river at Calhoun street being estimated at $500; in the price per lineal foot asked for laying 24 inch pipe. The increase of cost in crossing at Clinton street was $4575. The contract fixes no special rate for laying the pipe under the river, and it cannot fairly be said that there was any contract rate for work of the class of that done in crossing the river in the depth of water, and with the quicksand, found at Clinton street. On the view taken by the defendant, the trustees could have made an alteration of plan requiring that the pipes should traverse a great length of the river, in deep water and quicksand, in crossing it diagonally, and the city could have had all the work done at the general price per lineal foot for laying the pipe. The contract is not capable of such a construction. The actual increase of cost is to be paid for.

The provision that all loss or damage arising "from any unforeseen obstructions, or any difficulties that may be encountered in the prosecution of the" work, "shall be incurred by the contractor without extra charge" to the city, cannot fairly apply to the obstructions and difficulties at the changed place of crossing, resulting from the increased depth of water and the quicksand.

As to the claim for the $750, the "special castings" were to be supplied by the defendant from a manufacturer at Fort Wayne, and not by the plaintiffs. They were connections between larger and smaller pipes. The plaintiffs had the

Digitized by Google

trenches ready, but the castings, when furnished to them, were defective in size, and expense and delay ensued, in remedying the defects, causing a damage to the plaintiffs, as alleged, of $750. The defendant contends that the clause in the contract which provides that the plaintiffs "shall have no claim upon the city for any delay in the delivery of pipes or other materials from the manufacturers," throws the loss from these defects on the plaintiffs. But we do not so think. The defects were such as could not be detected till the castings were being put in place, and the claim is not for delay in their delivery, within the meaning of the clause referred to. Nor does any work done by the plaintiffs in altering the castings, come under the head of such extra work as required a written order.

The size of the valve-boxes is not mentioned in the contract, nor their cost. They were, therefore, to be of the usual size and cost. The trustees afterwards required the valve-boxes to be of a size which made them cost $3 more each than those of the usual size would have cost. This was a change of plan, and the increased work caused by it is agreed to be paid for, but there is no contract rate for work of the class. The item of $447 seems to be recoverable.

The judgment of the Circuit Court is reversed, and the case is remanded to that court, with a direction to award a new trial.

Judgment reversed.

CLARK *v.* WOOSTER.

APPEAL FROM THE CIRCUIT COURT OF THE UNITED STATES FOR THE SOUTHERN DISTRICT OF NEW YORK.

Argued November 8, 9, 1886. — Decided December 6, 1886.

If a suit in equity to restrain from infringing letters patent and to recover profits and damages be commenced so late that under the rules of the court no injunction can be obtained before the expiration of the patent, the bill should be dismissed for want of equity jurisdiction: but if it be begun in such time that an injunction can be obtained before the expira-

Digitized by Google

tion of the patent, although only three days remain for it to run, it is within the discretion of the court to take jurisdiction; and if it does so, it may, without enjoining the defendant, proceed to grant the other incidental relief sought for.

This court will not assume, without proof, that a reissue made fourteen years after the issue of the original patent enlarges the original claim, or that it was sought for the purpose of enlarging it. *Thomson* v. *Wooster*, 114 U. S. 104, affirmed and applied.

Established license fees are the best measure of damages in suits for infringing patents.

This was a bill in equity for infringing a patent for an nvention. The case is stated in the opinion of the court.

Mr. Frederick P. Fish for appellants. *Mr. T. L. Liver-more* was with him on the brief.

Mr. Frederic H. Betts for appellee.

Mr. Justice Bradley delivered the opinion of the court.

This is a suit on a patent, brought by Wooster, the appellee, gainst the persons composing the firm of Johnson, Clark and o., of New York, to restrain them from infringing the patent, nd to recover profits and damages. The bill was filed on the 0th of December, 1879, and the patent expired fifteen days fterwards. The patent was for folding guides used on sewing achines, and is the same that was involved in the case of *homson* v. *Wooster*, 114 U. S. 104. It was granted to one ouglas in October, 1858, for a period of fourteen years, as extended in October, 1872, for seven years longer, and as then, in the same month, surrendered and reissued. The ill does not specify the particular ground on which the re-sued patent was granted, and although the answer avers that was unlawfully granted, that the original was surrendered r the purpose of claiming more and other things than were escribed and claimed in it, and that the reissued patent is ot for the same invention for which the original was granted, does not set out the original, nor was the original put in evi-ence in the cause, and no evidence was offered to substantiate

Digitized by Google

the allegations of the answer. The complainant produced th reissued patent in evidence and proved infringement. Th defendant adduced evidence before the examiner, but out c time, and it was ruled out by the court. A decree was mad establishing the patent, and the infringement thereof by th defendants, and referring it to a master to take and state a account of profits, and to assess damages, and the defendant were ordered to produce their books, papers, and devices usec so far as related to the matter in issue. Upon this referenc the parties entered into a stipulation before the master, b which the defendants admitted that they had purchased an disposed of 15,000 folding guides covered by the decree, and i consideration thereof the complainant waived all further test mony as to profits received by the defendants therefrom, an agreed to rely on proof of damages in place of profits. Th complainant adduced evidence to show that he had an estal lished license fee of ten cents for each folding guide purchase or disposed of, and had granted licenses at that rate to diver sewing machine companies. The master being satisfied wit this evidence, reported the damages at $1500. The defendant filed a number of exceptions to the report, none of which wer sustained, and a decree was entered for the amount of dan ages reported. The defendants thereupon appealed.

The points taken by the appellants are:

First. That the court below, sitting as a court of equity had no jurisdiction of the case, because the complainant had plain and adequate remedy at law.

Second. That the reissue of the patent was illegal b reason of laches in applying for it.

Third. That the court erred in finding that the measure c damages was an established license fee, and that such licens fee was proved.

As to the first point, the bill does not show any specia ground for equitable relief, except the prayer for an injunc tion. To this the complainant was entitled, even for the shor time the patent had to run, unless the court had deemed i improper to grant it. If, by the course of the court, no injunc tion could have been obtained in that time, the bill could ver

Digitized by Google

properly have been dismissed, and ought to have been. But by the rules of the court in which the suit was brought only four days' notice of application for an injunction was required. Whether one was applied for does not appear. But the court had jurisdiction of the case, and could retain the bill, if, in its discretion, it saw fit to do so, which it did. It might have dismissed the bill, if it had deemed it inexpedient to grant an injunction; but that was a matter in its own sound discretion, and with that discretion it is not our province to interfere, unless it was exercised in a manner clearly illegal. We see no illegality in the manner of its exercise in this case. The jurisdiction had attached, and although, after it attached, the principal ground for issuing an injunction may have ceased to exist by the expiration of the patent, yet there might be other grounds for the writ arising from the possession by the defendants of folding guides illegally made or procured whilst the patent was in force. The general allegations of the bill were sufficiently comprehensive to meet such a case. But even without that, if the case was one for equitable relief when the suit was instituted, the mere fact that the ground for such relief expired by the expiration of the patent, would not take away the jurisdiction, and preclude the court from proceeding to grant the incidental relief which belongs to cases of that sort. This has often been done in patent causes, and a large number of cases may be cited to that effect; and there is nothing in the decision in *Root* v. *Railway Co.*, 105 U. S. 189, to the contrary. *Cotton Tie Co.* v. *Simmons*, 106 U. S. 89; *Lake Shore, &c., Railway* v. *Car-Brake Co.*, 110 U. S. 229; *Consolidated Valve Co.* v. *Crosby Valve Co.*, 113 U. S. 157; *Thomson* v. *Wooster*, 114 U. S. 104. It is true that where a party alleges equitable ground for relief, and the allegations are not sustained, as where a bill is founded on an allegation of fraud, which is not maintained by the proofs, the bill will be dismissed *in toto*, both as to the relief sought against the alleged fraud, and that which is sought as incidental thereto.

The point insisted on, that the bill contained no charge of continued infringement, or of infringement at the time of commencing the suit, if it were material, is not sustained by the fact. The bill does contain such a charge.

Digitized by Google

As the court had jurisdiction at the inception of the suit, even though upon a narrow ground, yet, as the defendants did not ask the dismissal of the bill on the ground of want of jurisdiction, we should be very reluctant, if we had the power, now, on an appeal, after the case has been tried and determined, to reverse the decree.

The second point raised was substantially disposed of in the case of *Thomson* v. *Wooster*, *qua supra*. The allegations in the present bill are the same as they were in that case. Neither the bill nor the proofs show anything from which the court can infer that the reissue was illegally granted; and the allegations of the answer are unsupported by evidence. The reissued patent itself made a *prima facie* case for the complainant. The allegations of the answer, that it was issued for the mere purpose of expanding the claim of the original, and that it was for another and different invention, should have been proved. But we have no evidence on the subject, not even the original patent with which to compare the reissue. This point, therefore, is wholly without foundation.

The third point, as to the measure of damages, and the want of proof thereof, is equally untenable. It is a general rule in patent causes, that established license fees are the best measure of damages that can be used. There may be damages beyond this, such as the expense and trouble the plaintiff has been put to by the defendant; and any special inconvenience he has suffered from the wrongful acts of the defendant; but these are more properly the subjects of allowance by the court, under the authority given to it to increase the damages.

As to the sufficiency of the proof, we see no occasion to disturb the conclusion reached by the master on this point. The complainant proved several instances of licenses given by him to large sewing machine companies, the fees on which were regularly paid, and corresponded with the rate allowed by the master. We think that the defendants have no occasion to complain of the amount awarded.

The decree of the Circuit Court is affirmed.

Digitized by Google

McCREERY v. HASKELL.

ERROR TO THE SUPREME COURT OF THE STATE OF CALIFORNIA.

Argued November 12, 1886. — Decided December 6, 1886.

Where, under the eighth section of the act of July 23d, 1866, "to quiet land titles in California," a survey is made by the United States Surveyor General for California of a claim to land under a confirmed Mexican grant, and land is set off by him in satisfaction of the grant, the survey is operative without the approval of the Commissioner of the General Land Office. Land lying outside of such survey then becomes subject to State selection in lieu of school sections covered by the grant, and is open to settlement under the preëmption laws.

As between the State and the settler, the party which first commences the proceedings required to obtain the title, if they are followed up to the final act for its transfer, is considered to have priority of right. The rule prevails in such cases, first in time first in right.

For lands selected by the State of California, it has not been the practice of the Land Department to issue patents. When the selections are approved by the Secretary of the Interior, a list of them, with the certificate of the Commissioner of the General Land Office, is forwarded to the State authorities. This listing operates to transfer the title to the lands, as of the date when the selections were made and reported to the local land office, and cuts off all subsequent claimants. Accordingly, where a selection was made in 1868, which was subsequently approved by the Secretary of the Interior, and the lands were listed to the State by the Commissioner of the General Land Office, a patent for the same lands issued upon a settlement made in December, 1869, under the preëmption laws, conferred no title as against the State.

This was an action for the possession of land. The case is stated in the opinion of the court.

Mr. George F. Edmunds for plaintiff in error.

Mr. Walter H. Smith for defendants in error. *Mr. A. T. Britton* and *Mr. A. B. Browne* were with him on his brief.

Mr. Justice Field delivered the opinion of the court.

This was an action for the possession of a tract of land in the county of Los Angeles, California, described in the com-

Digitized by Google

plaint as the southeast quarter of section fourteen, in township two, in that county. The plaintiff asserted title to the premises by a patent of the United States, bearing date October 10th, 1879, issued upon an alleged settlement and purchase under the preëmption laws. He claimed to have settled upon the land December 21st, 1869; to have filed his declaratory statement November 28th, 1871; and to have paid the purchase money and received his certificate of entry in April, 1876.

When this action was commenced, and when it was tried, Mrs. Fuller was one of the defendants. She traced title to the land by a patent of the State of California to one Keller, bearing date March 4th, 1874, issued to him upon a certificate of purchase, given December 21st, 1871; and by conveyance from him to her husband, now deceased. By order of the Probate Court of Los Angeles County the land was set apart to her as a homestead. The other defendant claimed possession merely as her agent and employé. After the case was brought to this court she died, and, upon representation that her interest had passed to Ellen Haskell, the latter was substituted as defendant in her place.

The land was selected by the State in part satisfaction of section sixteen of one of the townships of the county, which was within the limits of a confirmed Mexican grant, as hereafter mentioned. By the act of Congress of March 3d, 1853, making the public lands of California, with certain exceptions, subject to the general preëmption law of September 4th, 1841, sections sixteen and thirty-six of each township were granted to the State for the purpose of public schools, provided the sections, before the public surveys were extended over them, were not settled upon, and the settlement shown by the erection of a dwelling-house, or the cultivation of a portion of the land, or were not reserved for public uses or "taken by private claims." If the sections were thus settled upon, or reserved, or "taken by private claims," the State was authorized to select other lands in lieu thereof. 10 Stat. 244, c. 195, §§ 6, 7. The Mexican grant, within the claimed limits of which the premises in controversy were situated, was

Digitized by Google

nown as the Sausal Redondo Rancho; it also embraced sec-
ons sixteen and thirty-six of the township. It was made to
ne Antonio Ignacio Abila, May 20th, 1837, by the then act-
ng Governor of California. The claim of the grantee to the
nd was confirmed, on the 10th of June, 1855, by the Board
f Land Commissioners for the ascertainment and settlement
f private land claims in California, and by the District Court
f the United States, at its December term, 1856. The de-
ree of the court became final by the dismissal, under stipula-
on of the Attorney General, of the appeal taken from it to
he Supreme Court of the United States. In 1858, a survey
f the land claimed was made by a deputy surveyor, but not
eing approved by the Surveyor General it amounted to
othing more than a private survey. It was not until 1868
hat any other survey was made, nor does it appear that there
as any application for one by the grantee or any party inter-
sted in the claim. For such neglect, the act of Congress of
uly 23d, 1866, "to quiet land titles in California," furnished
remedy. 14 Stat. 218, c. 219. It provided that in all
ases where a claim to land by virtue of a right or title de-
ived from the Spanish or Mexican authorities had been finally
onfirmed, or should thereafter be finally confirmed, and a
urvey and plat thereof should not have been requested within
en months after the passage of that act, or after the final
onfirmation subsequently made, it should be the duty of the
urveyor General of the United States for California, as soon
s practicable, to cause the lines of the public surveys to be
xtended over said lands, and to set off in full satisfaction of
uch grant, and according to the lines of the public surveys,
he quantity of land confirmed by such final decree, and as
early as could be done in accordance with it. And the act
eclared that "all the land not included in such grant, as so
et off, shall be subject to the general land laws of the United
tates." Under this act, the land claimed was surveyed by a
eputy United States surveyor, George Hansen; and set
part to the grantee in satisfaction of the grant. The survey
as approved by the Surveyor General, and over the land the
ection and township lines were extended. On the 22d of

Digitized by Google

April, 1868, the township plats were filed in the district lan office at San Francisco.

The land lying outside of this survey thus became, in th language of the act, "subject to the general land laws of th United States." It was open to settlement with other publ lands, and consequent preëmption by settlers; and to selectio by the State in lieu of the school sections within the confirme Mexican grant. *Frasher* v. *O'Connor*, 115 U. S. 102, 11 As between the settler and the State, the party which fir commenced the proceedings required to obtain the title, if fo lowed up to the final act of the government for its transfe is considered as being entitled to the property. In such case the rule prevails that the first in time is the first in right. I *Shepley* v. *Cowan*, 91 U. S. 330, 337, where there was a conte between a State selection and a settler, we said: "The part who takes the initiatory step in such cases, if followed up t patent, is deemed to have acquired the better right, as agains others, to the premises. The patent, which is afterward issued, relates back to the date of the initiatory act, and cu off all intervening claimants. Thus the patent upon a Stat selection takes effect as of the time when the selection is mad and reported to the land office; and the patent upon a pre emption settlement takes effect from the time of the settlemen as disclosed in the declaratory statement or proofs of the set tler to the register of the local land office. The action o the State and of the settler must, of course, in some way, b brought officially to the notice of the officers of the govern ment having in their custody the records and other evidence of title to the property of the United States, before their respec tive claims to priority of right can be recognized. But it was no intended by the eighth section of the act of 1841, in authoriz ing the State to make selections of land, to interfere wit the operation of the other provisions of that act, regulating the system of settlement and prëemption. The two modes o acquiring title to land from the United States were not in con flict with each other. Both were to have full operation, tha one controlling in a particular case under which the firs initiatory step was had."

Digitized by Google

For selections of lands in California in lieu of the school ections covered by Mexican grants, it has not been the prac-ce of the Land Department to issue patents. When the elections are approved by the Secretary of the Interior, a list of nem, with the certificate of the Commissioner of the General and Office, is forwarded to the State authorities. The list nus certified operates to convey the title to the State as fully s by patent. The Revised Statutes, embodying the provis-ons of the statute of August 3d, 1854, 10 Stat. 346, c. 201, rovide that when a law of Congress making a grant does not onvey the fee simple title to the lands, or require patents to e issued therefor, the lists of such lands certified by the Com-issioner of the General Land Office under his seal of office, ther as originals or copies of the originals or records, "shall e regarded as conveying the fee simple of all the lands em-raced in such lists that are of the character contemplated by ich act of Congress and intended to be granted thereby; but here lands embraced in such lists are not of the character nbraced by such acts of Congress, and are not intended to e granted thereby, said lists, so far as these lands are con-erned, shall be perfectly null and void, and no right, title, laim, or interest shall be conveyed thereby." Rev. Stat. 2449.

Where, by reason of the loss of the school sections, a selec-on is made of other lands, the list certified operates upon the election as of the day when made and reported to the local and office, and cuts off, as would a patent in such cases, all ubsequent claimants.

In the present case the selection by the authorities of the tate of the land in controversy, in part satisfaction of school ection sixteen covered by the Mexican grant, was made on he 22d of April, 1868, nearly one year and eight months efore the alleged settlement of the plaintiff. The subsequent pproval of the selection by the Secretary of the Interior and he listing of the land to the State by the Commissioner of the General Land Office, completed the proceedings which vested he title in the State as of the date of the selection.

The case at bar is similar in the principles which control

Digitized by Google

its disposition to that of *Frasher* v. *O'Connor*, which wa
before us at the October Term, 1884. 115 U. S. 102. I
differs from it in the fact, that there the defendants claime
that they had acquired, by their settlement upon the land, th
right of preëmption, and, as preëmptors, were entitled t
patents of the United States, and, therefore, could call i
question the validity of the proceedings by which the lan
was selected by the State agents and listed to the State; bu
here the plaintiff has obtained a patent of the United State
issued upon a settlement made after the selection of the lan
by the State. In the former case the court held that the onl
question for consideration by the officers of the United State
respecting lands granted to the State was, whether the Stat
possessed the right to claim the land under the grant, an
whether the land was subject to selection by its agents. Irreg
ularities in the transactions between the State agents and it
purchasers were matters which did not come under review b
those officers. So far as the general government is concerne
it was sufficient that the State did not complain, and accepte
the selection in satisfaction of the grant to her. The claim o
a third party could not be improved by showing irregularit
in the proceedings to which the State did not object. Th
issue of a patent to the alleged preëmptors in that case — i
being held that they had no right to settle upon the land wit
a view to secure a preëmptive right — would not have re
dered their position more tenable.

The contention of the plaintiff, as we understand it, is, tha
the land in controversy, being within the claimed limits of
Mexican grant, was not open to selection by the State unti
the survey of the land confirmed was finally approved by th
Land Department, and that such approval was not had unti
October, 1871, after his settlement. It was upon that theor
that the local court of California held that the Secretary o
the Interior and the Commissioner of the General Land Offic
(for it seems that they both acted) had inadvertently and b
mistake listed the land to the State in lieu of the quarter sec
tion supposed to be lost. It would seem that at one time th
Land Department had come to the same conclusion, althoug

Digitized by Google

its utterances on the subject were hesitating and conflicting. In *Frasher* v. *O'Connor*, we considered at length the effect of the survey of Hansen, and the right of the State to select lieu lands outside of it. By the act of Congress of July 1st, 1864, "to expedite the settlement of titles to lands in the State of California," 13 Stat. 332, c. 194, the surveys of private land claims in that State were made subject to the supervision and control of the Commissioner of the General Land Office. Without his approval a survey had no binding force, and could not be treated as segregating the land surveyed from the public lands. That act also provided that it should be the duty of the Surveyor General of California to cause all private land claims finally confirmed to be accurately surveyed, and plats thereof to be made whenever requested by the claimants, provided the claimant should first deposit in the District Court of the district a sufficient sum of money to pay the expenses of the survey and plat, and of the publication required. It was supposed that the surveys of confirmed claims under Mexican grants would be thus expedited and patents sooner obtained. But no such result followed. Many claimants failed to ask for a survey of their claims. Most of the grants were of a specific quantity of land lying within boundaries embracing a much larger quantity. The specific quantity to which alone the grantee was entitled could be segregated and set apart only by an official survey. Until that was had the grantee remained a cotenant with the government in possession and use of the whole tract. He was not, therefore, inclined to expedite the survey. His interest was to postpone it. To do away with the delays which grew out of this and other causes the act of July 23, 1866, to which we have referred, was passed, declaring that if no survey be requested, as provided by the act of 1864, within ten months, as to previously confirmed claims, and ten months after confirmation as to subsequently confirmed claims, it should be the duty of the Surveyor General to survey the land and to set off the land confirmed in full satisfaction of the grant; and "that all the land not included in such grant as so set off shall be subject to the general land laws of the United States." The survey in such cases was thus with-

Digitized by Google

drawn from the supervision of the Land Department. Tha the grantee should be bound by it, at least until the survey should be set aside by competent authority, was not unreason able. It was always in his power to have a survey made o the confirmed claim under the act of 1864, which would have been subject to the supervision and control of the Land De partment. It was his neglect to request such survey tha conferred upon the Surveyor General the duty of acting upon his own responsibility. The action was sufficient to subjec the land outside of the survey to State selection and othe modes of disposal of the public lands. It is true the Surveyo General did afterwards, upon the demand of the grantee, orde a new survey and recall the township plats; but his action wa not sustained by the Secretary of the Interior. That office set aside the new survey and ordered the township plats to b returned to the land office, and approved of the original sur vey. The selection by the State was made before the orde for a new survey and the withdrawal of the township plats It is not necessary to express any opinion as to what woul have been the effect upon the selection if the new survey ha been sustained. As we said in *Frasher* v. *O'Connor*, "al that is necessary to decide here is, that, after the grant ha been surveyed and the township plats filed, the State was a liberty to make selections from land lying outside of the survey and preëmptors were at liberty to settle upon it, and, if th survey were not ultimately set aside, their rights thus initiate would be protected." 115 U. S. 115.

The conclusion we have reached renders it unnecessary t consider the effect of the judgment rendered in the case o *Keller* v. *McCreery*, as an adjudication of the questions pre sented with reference to the premises in controversy.

Judgment affirmed

Digitized by Google

POMACE HOLDER COMPANY v. FERGUSON.

APPEAL FROM THE CIRCUIT COURT OF THE UNITED STATES FOR THE NORTHERN DISTRICT OF NEW YORK.

Argued November 19, 1886. — Decided December 6, 1886.

The claim of letters-patent No. 187,100, granted to John Clark, February 6th, 1877, for an "improvement in cheese-formers for cider-presses," namely, "The guide-frame D, in combination with an extended pomace-rack, and a cloth to inclose a layer of pomace therein, substantially as described," is invalid, because it did not require invention to use the described guide-frame in connection with the racks and the cloths.

The racks and the cloths had been before used in connection, and an enclosure was used with them, which enabled the operator to make the pomace of uniform depth on each rack, and prevented the lateral spreading of the pomace; and it required only ordinary mechanical skill and judgment to make either the guide-frame or the rack of the desired size.

This was a bill in equity to restrain the infringement of etters-patent. Answer denying the validity of the patent. Decree below for respondent from which complainant ap-ealed. The case is stated in the opinion of the court.

Mr. Walter E. Ward for appellant.

Mr. Wm. H. King for appellee.

Mr. Justice Blatchford delivered the opinion of the court.

This is a suit in equity brought in the Circuit Court of the nited States for the Northern District of New York, for the fringement of letters-patent No. 187,100, granted to John lark, February 6th, 1877, for an "improvement in cheese-rmers for cider-presses," on an application filed September th, 1876. The specification and drawings of the patent are follows:

"The object I have in view is, in laying up a 'cheese' for e cider-press, where each layer is folded up in a cloth, to

Digitized by Google

secure uniformity of thickness of all the layers in the mass or cheese, and thus secure uniform pressure on its entire area, and to avoid all tendency to break the pomace frames or rack.

Fig. 1.

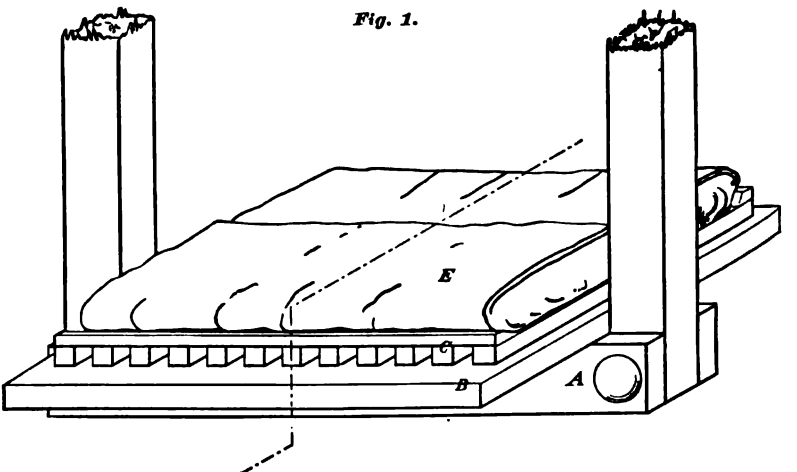

Fig. 2.

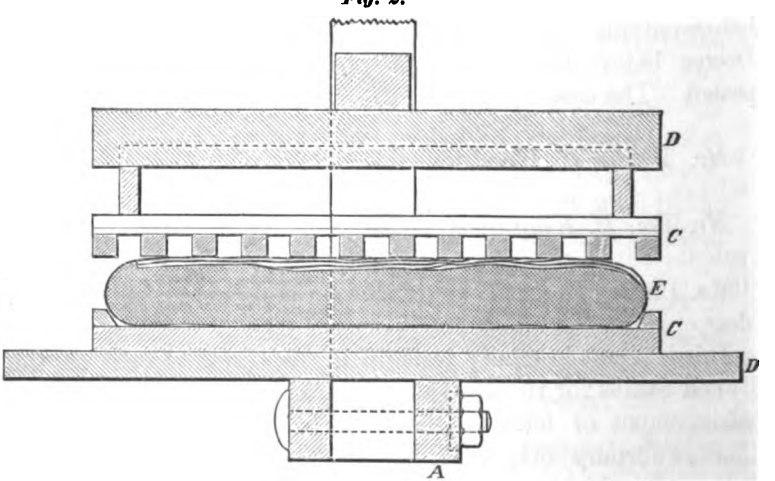

To this end it consists in the employment of a guide-frame, in combination with extended pomace-racks, as more fully hereinafter set forth. Figure 1 is a perspective view, showing the manner of laying up a cheese in press. Fig. 2 is a cross-sec-

Digitized by Google

tion at *xx*. In the drawing, A represents the lower framework of a cider-press, on which is laid a bed, B. C is a pomace-rack, which may be rigid, as shown, or flexible, as described in letters-patent No. 148,034, issued to me March 3, 1874. On this rack is laid a guide-frame, D, whose bottom girts are not spaced far enough apart to extend the full length of the rack on which they rest. A cloth, E, large enough to envelop the layer, is then laid on the rack, inside the frame, and opened out to receive the pomace, which is 'struck' level with the girts of the frame, after which the cloth is folded over the levelled pomace, and the frame is lifted off. The next and succeeding racks are in like manner laid on the first, and filled up, and a follower is placed on the upper one, when the cheese is ready to press. Laid up in this way, the several layers are uniform in thickness, and the cheese, in mass, is level on top, and offers a uniform resistance to the pressure, over its entire area, thus assuring the expression of all the juice and precluding all danger of breaking the pomace-racks. If the bed B be extended, a cheese may be built upon a board while one is being pressed, and then be slid under the follower when the first one is removed."

The claim is in these words: "The guide-frame D, in combination with an extended pomace-rack, and a cloth to enclose a layer of pomace therein, substantially as described."

The answer sets up, as defences, want of novelty, want of patentability, and public use for more than two years before the application for the patent. After a hearing on proofs, a decree was made adjudging the patent to be invalid and dismissing the bill. The plaintiff has appealed.

The decision of the Circuit Court, 21 Blatchford, 376, proceeded on these grounds: (1.) Cloths, and also racks, and also guide-frames, having each been used before, the aggregation of them, as described in the patent, was not a valid combination. (2.) The use of the described guide-frame, in connection with the racks and cloths, did not involve invention. (3.) The precise combination described in the patent was in public use more than two years before the patent was applied for.

Digitized by Google

Without examining any other question raised in the cas we are of opinion that the patent must be held void on th second ground above mentioned. A rack on which to plac the pomace was old, and a cloth to cover the pomace lying o the rack was old, the two being used in connection, and an en closure was used with them, which enabled the operator t make the pomace of uniform depth on each rack, and pre vented the lateral spreading of the pomace. The only poin of the invention would seem to be the use of a guide-fram smaller than the rack, or, in other words, the use of a rac larger than the guide-frame. There was no invention in mak ing the guide-frame or the rack of the desired size. It re quired only ordinary mechanical skill and judgment. Withi the recent cases in this court on the subject the patent must b held void. *Vinton* v. *Hamilton*, 104 U. S. 485; *Hall* v. *Ma neale*, 107 U. S. 90; *Atlantic Works* v. *Brady*, 107 U. S. 19 200; *Slawson* v. *Grand Street Railroad Co.*, 107 U. S. 649 *King* v. *Gallun*, 109 U. S. 99; *Double-Pointed Tack Co.* v *Two Rivers Manufacturing Co.*, 109 U. S. 117; *Estey* v. *Bu dett*, 109 U. S. 633; *Bussey* v. *Excelsior Manufacturing Co* 110 U. S. 131; *Pennsylvania Railroad Co.* v. *Locomoti Truck Co.*, 110 U. S. 490; *Phillips* v. *Detroit*, 111 U. S. 604 *Morris* v. *McMillin*, 112 U. S. 244; *Hollister* v. *Benedi Manufacturing Co.*, 113 U. S. 59; *Thompson* v. *Boisselie* 114 U. S. 1, 11; *Stephenson* v. *Brooklyn Railway Co.*, 11 U. S. 149; *Yale Lock Manufacturing Co.* v. *Sargent*, 11 U. S. 554; *Gardner* v. *Herz*, 118 U. S. 180.

Decree affirme

Digitized by Google

DONNELLY v. DISTRICT OF COLUMBIA.

APPEAL FROM THE COURT OF CLAIMS.

Submitted November 19, 1886. — Decided December 13, 1886.

A creditor who receives from his debtor a negotiable instrument of the debtor for the amount of his debt, and sells it for its market value to a third person, cannot sue the debtor on the original debt.

Looney v. *District of Columbia*, 113 U. S. 258, affirmed.

This was an appeal from the Court of Claims. The petition set forth contracts between one Cullinane since deceased, the testator of appellants, who were plaintiffs below, and the performance of the work by Cullinane. The contracts called for payments in cash. There was a dispute about the quality of some of the work, which was finally adjusted, and a settlement made in the manner set forth in the findings of fact by the Court of Claims as follows:

"XII. After the correspondence hereinbefore set forth, there were verbal negotiations between the claimant and his attorney and individual members of the board, resulting finally in the signing and sealing by the claimant and the board of the following paper:

"Whereas differences have existed between the Board of Public Works of the District of Columbia and Patrick Cullinane in reference to the contract of said Cullinane for improving Four-and-a-half street, in the city of Washington, it is agreed to adjust the same by deducting from the total amount due said Cullinane the sum of fifteen thousand dollars, in consequence of the character of the work, in the judgment of the board, and the amount equitably chargeable against the Metropolitan Railroad Company, which said amount is to be hereafter fixed between said board and said company; bonds to be issued to said Cullinane for the balance due him.

Digitized by Google

"Witness our hands and seals this thirteenth day of September, A.D. eighteen hundred and seventy-three.

"PATRICK CULLINANE.	[SEAL.]
H. D. COOKE.	[SEAL.]
ALEX. R. SHEPHERD.	[SEAL.]
JAMES A. MAGRUDER.	[SEAL.]
ADOLF CLUSS.	[SEAL.]
H. A. WILLARD.	[SEAL.]

"It does not appear that there was, before or at the time of the signing of this paper, any other agreement than this between the claimant and the board as to the settlement of the matters of difference between them; nor does it appear that there was any stipulation connected with said settlement, which, after having been agreed upon between the parties, was omitted, by mistake or otherwise, from said paper.

"XIII. In pursuance of the agreement set forth in the next preceding finding the treasurer of the board issued and delivered to the claimant bonds of the District of Columbia, of the description known as 'permanent improvement bonds,' to the amount, on their face, of $113,950, for that amount found to be due him for the work done by him under the contracts referred to in the first three of the foregoing findings, after deducting $15,000 for defective work; of which bonds the following is a sample: [Then follows a copy of the bond].

"XIV. At the time of the delivery of said bonds to the claimant they were, in the money market, below par, and he knew that fact.

"XV. After receiving said bonds the claimant hypothecated $45,000 of them with one Blumenburg, as security for money borrowed of him. The remainder of them he sold, but when, or for what prices, does not satisfactorily appear.

The Court of Claims dismissed the petition, from which plaintiff appealed.

Mr. V. B. Edwards for appellant.

Mr. Assistant Attorney General Maury for appellee.

Digitized by Google

Statement of Facts.

Mr. Chief Justice Waite delivered the opinion of the court.

The judgment in this case is affirmed on the authority of *oney* v. *The District of Columbia*, 113 U. S. 258. It hav-g been found as a fact by the court below that no mistake d been made in reducing the contract to writing, no ques-ons are presented in this court on that branch of the case.

Affirmed.

HALSTED v. BUSTER.

ROR TO THE DISTRICT COURT OF THE UNITED STATES FOR THE DISTRICT OF WEST VIRGINIA.

Argued November 23, 1886.—Decided December 13, 1886.

hen the jurisdiction of a circuit court of the United States in an action at law depends upon the citizenship of the parties to the suit, the dec-laration must show the necessary relative citizenship.

hen the judgment of the court below is reversed by reason of failure of the pleadings to show the citizenship necessary to give jurisdiction, it is within the discretion of that court, on the case coming back, to allow amendments to cure the defect.

This was an action at law to try title to real estate. The claration was as follows:

"John Halsted, a citizen of the city of New York and of State of New York, complains of William B. Buster and dridge Barrett for that heretofore, to wit, on the first day February, 1873, the said plaintiff was possessed in fee of a tain tract or parcel of land lying and being in the county Fayette and State of West Virginia, which land was con-yed by Robert Soulter, trustee, to John Halsted on the 6th June, 1864, but which land is more particularly described a deed from William K. Smith and Anderson G. Grinnan the Forest Hill Mining and Manufacturing Company, dated the 15th day of June, 1867, as follows, to wit [Here fol-vs a description by metes and bounds]; also a certain parcel

Digitized by Google

of land bounded on the south by the foregoing boundary, the north by the Great Kanawha River, being the weste part of the Huddleston survey by a line running from t northerly to the southerly side of the same, containing ab one hundred acres, being a part of the tract known as t Huddleston tract. And, being possessed of the whole of t foregoing described land, the defendants afterwards, to w on the 10th day of February, 1873, entered into said premi and unlawfully withheld from said plaintiff the possessi thereof, to his damage of $5000."

Defendants pleaded not guilty. A trial was had, resulti in a verdict for defendants, and judgment was entered on t verdict; to review which this writ of error was sued out.

Mr. A. Burlew for plaintiff in error.

Mr. J. F. Brown (*Mr. W. Mollohan* was with him on t brief) for defendants in error.

Mr. Chief Justice Waite delivered the opinion of t court.

This record does not show that the Circuit Court had ju diction of the suit, which depends alone on the citizenship the parties. In the declaration it is stated that Halsted, t plaintiff, is a citizen of New York, but nothing is said of t citizenship of the defendants. Neither is there anything the rest of the record to show what their citizenship actual was. For this reason the judgment is reversed, but, as t fault rests alone on the plaintiff, whose duty it was, in brin ing the suit, to make the jurisdiction appear, the reversal w be at his cost in this court. *Hancock* v. *Holbrook*, 112 U. 229. If the citizenship of the defendants was, in fact, su at the commencement of the suit as to give the Circuit Cou jurisdiction, it will be in the power of that court, when t case gets back, to allow the necessary amendment to be ma and then proceed to trial. This whole subject was recent considered at the present term in *The Continental Life Insu*

Digitized by Google

ance Co. v. *Rhoads*, *ante*, 237, and it is only necessary to refer now to the opinion in that case and the authorities there cited for the reasons of this judgment.

Reversed at the cost of the plaintiff in error.

COIT *v.* GOLD AMALGAMATING COMPANY.

APPEAL FROM THE CIRCUIT COURT OF THE UNITED STATES FOR THE EASTERN DISTRICT OF PENNSYLVANIA.

Argued November 18, 19, 1886. — Decided December 6, 1886.

Where the charter of a corporation authorizes capital stock to be paid for in property, and the shareholders honestly and in good faith pay for their subscriptions to shares in property instead of money, third parties have no ground of complaint.

A gross and obvious overvaluation of property conveyed to a corporation in consideration of an issue of stock at the valuation, is strong evidence of fraud in an action against a stockholder by a creditor to enforce personal liability for his debt.

This was a bill in equity against a corporation and its stockholders to enforce a debt due from the former against the latter. The case is stated in the opinion of the court.

Mr. Edward F. Hoffman and *Mr. Charles Hart* for appellant cited: *Tasker* v. *Wallace*, 6 Daly, 364; *Osgood* v. *King*, 42 Iowa, 478; *Wetherbee* v. *Baker*, 35 N. J. Eq. (8 Stewart) 501, 513.

Mr. R. C. McMurtrie (*Mr. Pierce Archer* was with him on his brief) cited: *Ochiltree* v. *Railroad Co.*, 21 Wall. 249; *Re State Ins. Co.*, 14 Fed. Rep. 28; *Re Telegraph Construction Co.*, L. R. 10 Eq. 384; *Cooper* v. *Frederick*, 9 Ala. 738, 742; *Re South Mountain Mining Co.*, 7 Sawyer, 30; *Same Matter*, 8 Sawyer, 366.

Digitized by Google

Opinion of the Court.

MR. JUSTICE FIELD delivered the opinion of the court.

The defendant, the North Carolina Gold Amalgamating Company, was incorporated under the laws of North Carolina, on the 30th of January, 1874, for the purpose, among other things, of working, milling, smelting, reducing, and assaying ores and metals, with the power to purchase such property, real and personal, as might be necessary in its business, and to mortgage or sell the same.

The plaintiff is the holder of a judgment against the company for $5489, recovered in the Court of Common Pleas of Philadelphia, on the 18th of May, 1879, upon its two drafts, one dated June 1st, 1874, and the other August 15th, 1874, each payable four months after its date. Unable to obtain satisfaction of this judgment upon execution, and finding that the company was insolvent, the plaintiff brought this suit to compel the stockholders to pay what he claims to be due and unpaid on the shares of the capital stock held by them, alleging that he had frequently applied to the officers of the company to institute a suit for that purpose, but that under various pretences they refused to take any action in the premises.

By its charter the minimum capital stock was fixed at $100,000, divided into 1000 shares of $100 each, with power to increase it from time to time, by a majority vote of the stockholders, to two million and a half of dollars. The charter provided that the subscription to the capital stock might be paid "in such instalments, in such manner and in such property, real and personal," as a majority of the corporators might determine, and that the stockholders should not be liable for any loss, or damages, or be responsible beyond the assets of the company.

Previously to the charter, the corporators had been engaged in mining operations, conducting their business under the name and title which they took as a corporation. Upon obtaining the charter, the capital stock was paid by the property of the former association, which was estimated to be of the value of $100,000, the shares being divided among the stockholders in

Digitized by Google

proportion to their respective interests in the property. Each stockholder placed his estimate upon the property; and the average estimate amounted to $137,500. This sum they reduced to $100,000, inasmuch as the capital stock was to be of that amount.

The plaintiff contends, and it is the principal basis of his suit, that the valuation thus put upon the property was illegally and fraudulently made at an amount far above its actual value, averring that the property consisted only of a machine for crushing ores, the right to use a patent called the Crosby process, and the charter of the proposed organization; that the articles had no market or actual value, and, therefore, that the capital stock issued thereon was not fully paid, or paid to any substantial extent, and that the holders thereof were still liable to the corporation and its creditors for the unpaid subscription.

If it were proved that actual fraud was committed in the payment of the stock, and that the complainant had given credit to the company from a belief that its stock was fully paid, there would undoubtedly be substantial ground for the relief asked. But where the charter authorizes capital stock to be paid in property, and the shareholders honestly and in good faith put in property instead of money in payment of their subscriptions, third parties have no ground of complaint. The case is very different from that in which subscriptions to stock are payable in cash, and where only a part of the instalments has been paid. In that case there is still a debt due to the corporation, which, if it become insolvent, may be sequestered in equity by the creditors, as a trust fund liable to the payment of their debts. But where full paid stock is issued for property received, there must be actual fraud in the transaction to enable creditors of the corporation to call the stockholders to account. A gross and obvious overvaluation of property would be strong evidence of fraud. *Boynton* v. *Hatch*, 47 N. Y. 225; *Van Cott* v. *Van Brunt*, 82 N. Y. 535; *Carr* v. *Le Fevre*, 27 Penn. St. 413.

But the allegation of intentional and fraudulent undervaluation of the property is not sustained by the evidence. The

Digitized by Google

patent and the machinery had been used by the corporators in their business, which was continued under the charter. They were immediately serviceable, and therefore had to the company a present value. The corporators may have placed too high an estimate upon the property, but the court below finds that its valuation was honestly and fairly made; and there is only one item, the value of the chartered privileges, which is at all liable to any legal objection. But if that were deducted the remaining amount would be so near to the aggregate capital, that no implication could be raised against the entire good faith of the parties in the transaction.

In May, 1874, the company increased its stock, as it was authorized to do by its charter, to $1,000,000, or 10,000 shares of $100 each. This increase was made pursuant to an agreement with one Howes, by which the company was to give him 2000 shares of the increased stock for certain lands purchased from him. Of the balance of the increased shares, 4000 were divided among the holders of the original stock upon the return and delivery to the company of the original certificates — they thus receiving four shares of the increased capital stock for one of the original shares returned. The other 4000 shares were retained by the company. The land purchased was subject to three mortgages, of which the plaintiff held the third and the agreement was that, under the first mortgage, a sale should be made of the property, and that mortgages for a like amount should be given to the parties according to their several and respective amounts, and in their respective positions and priorities.

The plaintiff was to be placed by the company, after the release of his mortgage, in the same position. Accordingly he made a deed to it of all his interest and title under the mortgage held by him, the trustee joining with him, in which deed the agreement was recited. The company, thereupon, gave him its mortgage upon the same and other property, which was payable in instalments. The plaintiff also received at the same time an accepted draft of Howe's on the company for $1000. When the first instalment on the mortgage became due, the company being unable to pay it, he took its draft for

Digitized by Google

the amount, $3000, payable in December following. It is upon these drafts that the judgment was recovered in the Court of Common Pleas of Philadelphia, which is the foundation of the present suit. It is in evidence that the plaintiff was fully aware, at the time, of the increase in the stock of the company, and of its object. Six months afterwards, the increase was cancelled, the outstanding shares were called in, and the capital stock reduced to its original limit of $100,000. Nothing was done after the increase to enlarge the liabilities of the company. The draft of Howes was passed to the plaintiff and received by him at the time the agreement was carried out upon which the increase of the stock was made; and the draft for $3000 was for an instalment upon the mortgage then executed. The plaintiff had placed no reliance upon the supposed paid-up capital of the company on the increased shares, and, therefore, has no cause of complaint by reason of their subsequent recall. Had a new indebtedness been created by the company after the issue of the stock and before its recall, a different question would have arisen. The creditor in that case, relying on the faith of the stock being fully paid, might have insisted upon its full payment. But no such new indebtedness was created, and we think, therefore, that the stockholders cannot be called upon, at the suit of the plaintiff, to pay in the amount of the stock, which, though issued, was soon afterwards recalled and cancelled.

Judgment affirmed.

BUZARD v. HOUSTON.

APPEAL FROM THE CIRCUIT COURT OF THE UNITED STATES FOR THE WESTERN DISTRICT OF TEXAS.

Argued November 2, 1886. — Decided December 13, 1886.

A court of equity of the United States will not sustain a bill in equity, in a case of fraud, to obtain only a decree for the payment of money by way of damages, when the like amount might be recovered in an action at law.

A bill in equity alleged that the defendant, after agreeing in writing to sell

Digitized by Google

to the plaintiff a certain number of cattle at a specified price, induced him to surrender the agreement, and to receive instead thereof an assignment from the defendant of a similar contract of a third person with him, and also to pay the defendant a sum of money, and to give an obligation to pay him another sum, by false and fraudulent representations as to the solvency of that person; and prayed for a cancellation of the aforesaid assignment and obligation, for a reinstatement and confirmation of the original agreements, and its enforcement on such terms as the court might direct, or else for a repayment of the sum paid, and for damages, and for further relief. *Held*, that the bill showed no case for relief in equity, because an action of deceit would afford a full, adequate, and complete remedy.

If a bill in equity, showing ground for legal and not for equitable relief, prays for a discovery, as incidental only to the relief sought, and the answer discloses nothing, but the plaintiff supports the claim by independent evidence, the bill must be dismissed, without prejudice to an action at law.

This was a bill in equity, filed November 23, 1881, by Buzard and Hillard, citizens of Missouri, against Houston, a citizen of Texas, the material allegations of which were as follows:

That the plaintiffs were partners in the business of pasturing and breeding cattle upon a tract of land owned by them in the State of Texas, and on October 14, 1881, negotiated a purchase from the defendants of fifteen hundred cows and fifty bulls, to be delivered at Lampasas in that State in May, 1882, at the price of fifteen dollars and a half a head, one half payable upon the signing of the contract, and the other half upon delivery of the cattle; that the terms of their agreement were stated in a memorandum of that date, signed by the parties, and intended as the basis of a more formal contract to be afterwards executed; and that the plaintiffs at once paid to the defendant $500 in part performance.

That on October 31, 1881, the parties resumed negotiations, and met to complete the contract; that the defendant then proposed that, in lieu of the contract with him for the cattle mentioned in the memorandum, the plaintiffs should take from him an assignment of a similar contract in writing, dated August 13, 1881, and set forth in the bill, by which one Mosty agreed to deliver to the defendant an equal number of similar

Digitized by Google

cattle, at the same time and place, at the price of fourteen dollars a head.

That the defendant then stated that he had paid the sum of $15,000 on the contract with Mosty; and asked that, in case of his assigning that contract to the plaintiffs, they should pay him that sum, and also the difference of a dollar and a half a head in the prices mentioned in the two contracts, but finally proposed to deduct from this twenty-five cents a head.

That, as an inducement to the plaintiffs to make the exchange of contracts, the defendant represented to them that Mosty was good and solvent, and able to perform his contract; that he was better than the defendant, and then had on his ranch twelve hundred head of the cattle; and that there was no doubt of the performance of this contract, because one McAnulty was a partner with Mosty in its performance — of all which the plaintiffs knew nothing, except that they knew that McAnulty was a man of wealth, and fully able as well as willing to perform his contracts.

That on November 1, 1881, the plaintiffs, believing and relying on the defendant's representations aforesaid, accepted his proposition, and paid the sum of $14,500, making, with the sum of $500 already paid, the amount of $15,000, which he alleged he had paid to Mosty on his contract; and executed and delivered to the defendant their obligation to pay him, on the performance by Mosty of that contract, an additional sum of $1837.50, being the profit on the contract with Mosty in the sale to the plaintiffs, less the deduction of twenty-five cents a head; and returned to him his original contract with them, and in lieu thereof received from him his contract with Mosty and his assignment thereof to the plaintiffs, endorsed thereon, and set out in the bill, containing a provision that he should not be responsible in case of any failure of performance by Mosty.

That the aforesaid representations of the defendant were absolutely untrue, deceitful and fraudulent, and were known by the defendant to be false, and the plaintiffs did not know and had no means of knowing that they were untrue; that those representations were intended by the defendant to de-

Digitized by Google

ceive the plaintiffs, and did deceive them to their great injury, to wit, to the extent of the amount of $15,000 paid by them to him, and to the further extent of $10,000, for the expenses necessary to obtain other cattle, and for the loss of the increase of such cattle for the next year by reason of the impossibility of obtaining them in the exhausted condition of the market: and that Mosty at the time of the assignment was absolutely insolvent and had no property subject to be taken by his creditors, and his contract was utterly worthless, as the defendant then knew.

The bill then stated that the plaintiffs brought into court the contract between the defendant and Mosty, that it might be delivered up to the defendant; and also the assignment thereof by the defendant to the plaintiffs, that it might be cancelled.

The bill prayed for a discovery; for a rescission and cancellation of the assignment of the contract with Mosty, and also of the plaintiffs' obligation to pay to the defendant the sum of $1837.50; for the repayment to the plaintiffs of the excess of money received by the defendant from them beyond the amount which they were to pay him under the original contract; for a reinstatement and confirmation of that contract, and its enforcement upon such terms as the court might deem just and proper; or, if that could not be done, that the defendant be compelled to restore to the plaintiffs the sums of $500 and $14,500 received from them, and also to pay them the sum of $10,000 for damages which they had sustained by reason of the defendant's fraudulently obtaining the surrender of the original contract, and by reason of the other injuries resulting to them therefrom; and for further relief.

The defendant demurred to the bill, assigning as a cause of demurrer that the bill showed that the plaintiffs' only cause of action, if any, was for the sums of money paid by them on the contract, and for damages for breach of the contract, for which they had an adequate and complete remedy at law. The Circuit Court overruled the demurrer.

The defendant then answered fully under oath, denying that he made any of the representations alleged, and repeat-

Digitized by Google

ing the defence taken by demurrer; the plaintiffs filed a general replication; conflicting testimony was taken; at a hearing upon pleadings and proofs, the bill was dismissed with costs; and the plaintiffs appealed to this court.

Mr. H. E. Barnard for appellants.

Mr. James F. Miller, for appellee, submitted on his brief.

Mr. Justice Gray, after stating the case as above reported, delivered the opinion of the court.

In the Judiciary Act of 1789, by which the first Congress established the judicial courts of the United States and defined their jurisdiction, it is enacted that "suits in equity shall not be sustained in either of the courts of the United States, in any case where plain, adequate and complete remedy may be had at law." Act of September 24, 1789, c. 20, § 16, 1 Stat. 82; Rev. Stat. § 723. Five days later, on September 29, 1789, the same Congress proposed to the legislatures of the several States the Article afterwards ratified as the Seventh Amendment of the Constitution, which declares that "in suits at common law, where the value in controversy shall exceed twenty dollars, the right of trial by jury shall be preserved." 1 Stat. 21, 98.

The effect of the provision of the Judiciary Act, as often stated by this court, is that "whenever a court of law is competent to take cognizance of a right, and has power to proceed to a judgment which affords a plain, adequate and complete remedy, without the aid of a court of equity, the plaintiff must proceed at law, because the defendant has a constitutional right to a trial by jury." *Hipp* v. *Babin*, 19 How. 271, 278; *Insurance Co.* v. *Bailey*, 13 Wall. 616, 621; *Grand Chute* v. *Winegar*, 15 Wall. 373, 375; *Lewis* v. *Cocks*, 23 Wall. 466, 470; *Root* v. *Railway Co.*, 105 U. S. 189, 212; *Killian* v. *Ebbinghaus*, 110 U. S. 568, 573. In a very recent case the court said: "This enactment certainly means something; and if only declaratory of what was always the law, it must, at

Digitized by Google

least, have been intended to emphasize the rule, and to impress it upon the attention of the courts." *New York Guaranty Co.* v. *Memphis Water Co.*, 107 U. S. 205, 214.

Accordingly, a suit in equity to enforce a legal right can be brought only when the court can give more complete and effectual relief, in kind or in degree, on the equity side than on the common law side; as, for instance, by compelling a specific performance, or the removal of a cloud on the title to real estate; or preventing an injury for which damages are not recoverable at law, as in *Watson* v. *Sutherland*, 5 Wall. 74; or where an agreement procured by fraud is of a continuing nature, and its rescission will prevent a multiplicity of suits, as in *Boyce* v. *Grundy*, 3 Pet. 210, 215, and in *Jones* v. *Bolles*, 9 Wall. 364, 369.

In cases of fraud or mistake, as under any other head of chancery jurisdiction, a court of the United States will not sustain a bill in equity to obtain only a decree for the payment of money by way of damages, when the like amount can be recovered at law in an action sounding in tort or for money had and received. *Parkersburg* v. *Brown*, 106 U. S. 487, 500; *Ambler* v. *Choteau*, 107 U. S. 586; *Litchfield* v. *Ballou*, 114 U. S. 190.

In England, indeed, the court of chancery, in cases of fraud, has sometimes maintained bills in equity to recover the same damages which might be recovered in an action for money had and received. But the reason for this, as clearly brought out by Lords Justices Knight Bruce and Turner in *Slim* v. *Croucher*, 1 D., F. & J. 518, 527, 528, was that such cases were within the ancient and original jurisdiction in chancery, before any court of law had acquired jurisdiction of them, and that the assumption of jurisdiction by the courts of law, by gradually extending their powers, did not displace the earlier jurisdiction of the court of chancery. Upon any other ground, such bills could not be maintained. *Clifford* v. *Brooke*, 13 Ves. 131; *Thompson* v. *Barclay*, 9 Law Journal (Ch.) 215, 218. And we have not been referred to any instance in which an English court of equity has maintained a bill in such a case as that now before us. In *Newham*

Digitized by Google

v. *May*, 13 Price, 749, Chief Baron Alexander said: "It is not in every case of fraud that relief is to be administered by a court of equity. In the case, for instance, of a fraudulent warranty on the sale of a horse, or any fraud upon the sale of a chattel, no one, I apprehend, ever thought of filing a bill in equity."

The present bill states a case for which an action of deceit could be maintained at law, and would afford full, adequate, and complete remedy. The original agreement for the sale of a number of cattle, and not of any cattle in particular, does not belong to the class of contracts of which equity would decree specific performance. If the plaintiffs should be ordered to be reinstated in all their rights under that agreement, and permitted now to tender performance thereof on their part, the only relief which they could have in this suit would be a decree for damages to be assessed by the same rules as in an action at law. The similar contract with Mosty and the assignment thereof to the plaintiffs are in the plaintiffs' own possession, and no judicial rescission of the assignment is needed. If the exchange of the contracts was procured by the fraud alleged, it would be no more binding upon the plaintiffs at law than in equity; and in an action of deceit the plaintiffs might treat the assignment of the contract with Mosty as void, and, upon delivering up that contract to the defendant, recover full damages for the non-performance of the original agreement. No relief is sought against Mosty, and he is not made a party to the bill. The obligation executed by the plaintiffs to the defendant is not negotiable, so that there is no need of an injunction. A judgment for pecuniary damages would adjust and determine all the rights of the parties, and is the only redress to which the plaintiffs, if they prove their allegations, are entitled. There is therefore no ground upon which the bill can be maintained. *Insurance Co.* v. *Bailey*, 13 Wall. 616, and other cases above cited.

The comparative weight due to conflicting testimony such as was introduced in this case can be much better determined by seeing and hearing the witnesses than upon written depositions or a printed record.

Digitized by Google

This case does not require us to enter upon a considerati of the question, under what circumstances a bill showing ground for equitable relief, and praying for discovery as in dental only to the relief sought, is open to a demurrer to t whole bill, or may, if discovery is obtained, be retained f the purposes of granting full relief, within the rule often stat in the books, but as to the proper limits of which the autho ties are conflicting. It is enough to say that the case clear falls within the statement of Chief Justice Marshall: "B this rule cannot be abused by being employed as a mere p text for bringing causes, proper for a court of law, into a cou of equity. If the answer of the defendant discloses nothin and the plaintiff supports his claim by evidence in his ow possession, unaided by the confessions of the defendant, t established rules, limiting the jurisdiction of courts, requi that he should be dismissed from the court of chancery, a permitted to assert his rights in a court of law." *Russell* *Clarke*, 7 Cranch, 69, 89. See also *Horsburg* v. *Baker*, 1 P 232, 236; *Brown* v. *Swann*, 10 Pet. 497, 503.

The decree of the Circuit Court, dismissing the bill gen ally, might be considered a bar to an action at law, and it therefore, in accordance with the precedents in *Rogers* *Durant*, 106 U. S. 644, and the cases there cited,

Ordered that the decree be reversed, and the cause remand with directions to enter a decree dismissing the bill for wa of jurisdiction, and without prejudice to an action at la

Mr. Justice Bradley dissenting.

I dissent from the judgment in this case so far as it dire the bill to be dismissed by the court below for want of equi ble jurisdiction. The complainant had been induced to g up a contract for cattle made to him by the defendant, and accept in lieu of it an assignment from the defendant of a co tract which he had from a third person who was insolve and whose insolvency was not known by the complainant, b was known by the defendant, though he asserted that t third person was entirely responsible. The bill seeks to ab

Digitized by Google

gate and set aside the assignment and to restore to complainant his original contract, on account of the fraud and misrepresentation practised upon him. Having been induced to pay $15,000 in the transaction, and suffered a large amount of damages, he adds to the relief sought a prayer to have his damages assessed and decreed. This is the case made by the bill. I think it is clearly within the scope of equity jurisdiction, both on account of the fraud, and from the nature of the relief asked by the complainant, namely, the cancellation of an agreement, and the reinstatement of a contract which he had been fraudulently induced to cancel. If the bill had prayed nothing else, it seems to me clear that it would have presented a case for equity. A court of law could not give adequate relief. The existence of the assignment and the cancellation of the first agreement would embarrass the plaintiff in an action at law. It is different from the case of a lost note or bond. Fraud is charged, and documents exist which in equity ought not to exist. I think the complainant is entitled to have the fraudulent transaction wiped out, and to be restored to his original status.

KRAMER v. COHN.

APPEAL FROM THE DISTRICT COURT OF THE UNITED STATES FOR THE WESTERN DISTRICT OF ARKANSAS.

Submitted November 12, 1886. — Decided December 13, 1886.

A bill in equity by an assignee in bankruptcy against the bankrupt and another person, alleging that the bankrupt, with intent to defraud his creditors, concealed and sold his property, and that he invested the proceeds in a business carried on by him in the name of the other defendant, should, upon a failure to prove the latter allegation, be dismissed, without prejudice to an action at law against the bankrupt.

The case is stated in the opinion of the court.

Mr. Morris M. Cohn for appellant.

Digitized by Google

Mr. M. H. Sandels (*Mr. J. H. Clendening* was with him) for appellees.

MR. JUSTICE GRAY delivered the opinion of the court.

This bill in equity was filed by the assignee in bankruptcy of Isaac Cohn, against him and Mark S. Cohn, alleging that Isaac Cohn, before the adjudication of bankruptcy, and with intent to defraud his creditors, concealed his property and sold it for a large sum of money, and, after obtaining his discharge in bankruptcy, invested that money in a stock of goods, with which he had since carried on business in the name of the other defendant; that this stock in fact consisted of the property so kept back from his creditors, with the increase thereof, and that the other defendant had little, if any, interest therein: and praying for an answer, an injunction, a receiver, an account, and, upon failure to answer and account, for a decree vesting in the plaintiff the title in the stock, and for further relief.

The defendants answered separately upon oath, denying these allegations, and alleging that the business was carried on by Isaac Cohn as clerk of the other defendant, and was wholly owned by the latter.

At the hearing upon pleadings and proofs, the court was of opinion that the plaintiff was entitled to recover against Isaac Cohn, for money and assets fraudulently withheld by him from his assignee in bankruptcy, the sum of $6500, but that the plaintiff had failed to connect the other defendant with the fraudulent withholding of assets; and therefore entered a decree against Isaac Cohn for that sum and costs, but as to the other defendant dismissed the bill with costs.

The plaintiff and Isaac Cohn each filed a petition for a rehearing. The plaintiff's petition was denied. But upon the petition of Isaac Cohn it was ordered that as to him, "it appearing to the court that it is without jurisdiction in this case," the former decree be set aside and the bill be dismissed with costs and without prejudice. The plaintiff appealed to this court.

Digitized by Google

Statement of Facts.

No reason is shown for sustaining the appeal. So far as the plaintiff's claim was against Isaac Cohn personally, an action at law to recover the value of the property fraudulently concealed and sold by him would afford a full, adequate and complete remedy. The only pretence for resorting to equity was the allegation that the proceeds of that property had been invested in the stock in goods of a business carried on by him in the name of the other defendant, whereby it was sought to affect the latter and the goods with a trust in favor of the creditors of Isaac, and of the plaintiff as representing them. But the proof wholly failed to support that allegation, and showed that the plaintiff had no right of action, except to recover pecuniary damages against Isaac alone. It thus appeared that the plaintiff never had any claim within the cognizance of a court of equity; and the bill was rightly dismissed generally as to the second defendant, and without prejudice to an action at law against the first defendant. *Dowell* v. *Mitchell*, 105 U. S. 430; *Buzard* v. *Houston*, *ante*, 347, just decided.

Decree affirmed.

WILLIAMSPORT BANK *v.* KNAPP.

ERROR TO THE CIRCUIT COURT OF THE UNITED STATES FOR THE WESTERN DISTRICT OF PENNSYLVANIA.

Argued November 23, 24, 1886. — Decided December 13, 1886.

Each question certified to this court upon a division of opinion of the judges in the Circuit Court must be a distinct point of law, clearly stated, and not the whole case, nor whether upon the evidence judgment should be for one party or for the other.

The original action was debt on § 5198 of the Revised Statutes, brought in the Circuit Court of the United States for the Western District of Pennsylvania, against a national banking association established within that district, to recover twice the amount of interest, at the rate of nine per cent., received by the

Digitized by Google

defendant upon the discount of certain promissory notes. Section 5197 prohibits any such association from receiving upon such a discount a higher rate of interest than is allowed by the laws of the State in which the bank is established, except that where by the laws of the State "a different rate is limited for banks of issue organized under State laws," the rate so limited is allowed. The answer denied that the defendant owed the sums demanded, or had violated any provision of the national banking act.

The record showed that at the trial certain oral testimony therein stated, was offered by the plaintiffs in support of their allegations, was objected to by the defendant, the objection was overruled, and the defendant took exceptions. The record also showed that the defendant, for the purpose of proving that at the time of the discounts in question there were banks of issue, organized under the laws of Pennsylvania, allowed to receive interest on discounts at as high a rate as that received by the defendant, offered in evidence charters from the legislature of Pennsylvania of a number of banks, (the titles of which were given,) some of which were thereby expressly authorized to receive interest at such rates as might be agreed upon by the parties; and also offered in evidence a number of other bank charters, in connection with evidence that some of the banks issued notes of circulation, commonly called bank notes, without special authorization of law, in order "to show that incorporated banks and banking companies in Pennsylvania issued notes of circulation, commonly called bank notes under their respective general corporate powers, and not by virtue of any special authorization of law to issue such notes; and to show that incorporated banks and banking companies in Pennsylvania, not specially prohibited from issuing such notes, are banks of issue within the meaning of the act of Congress, by virtue of their incorporation and organization as banks or banking companies, and without any special authorization of law to issue such notes;" and the evidence so offered by the defendant was objected to by the plaintiffs, and admitted subject to their exception.

The record further showed that a verdict was returned for

Digitized by Google

the plaintiffs, and that the Circuit Judge and the District Judge signed a certificate that they were opposed in opinion upon the following questions arising at the trial:

"First. Whether under the evidence the defendant was legally authorized to take, receive, reserve and charge on the loans or discounts made for the plaintiffs upon the notes, bills of exchange and other evidences of debt, offered and received in evidence on the part of the plaintiffs, at the rate of interest charged by the defendant and paid by the plaintiffs, as shown in evidence, to wit, at the rate of nine per centum per annum.

"Second. Whether under the laws of the State of Pennsylvania a rate of interest or discount was limited for banks of issue, organized under State laws, at a rate equal to or exceeding that charged by the defendant to the plaintiffs, and whether the defendant was, under the evidence and the acts of Congress, allowed to take, receive, reserve and charge the rate so limited for the discounts made for the plaintiffs, to wit, at the rate of nine per centum per annum.

"Third. Whether the decision of the Supreme Court of Pennsylvania, 'that there are no banks, nor have there been any such banks in Pennsylvania, authorized to take and receive interest at a greater rate than six per cent.,' is binding and conclusive upon the judgment of the courts of the United States in determining the construction and effect in Pennsylvania of the acts of Congress commonly called the currency acts, and especially §§ 5197 and 5198 of the Revised Statutes of the United States.

"Fourth. Whether upon the whole evidence the plaintiff was entitled to recover."

Judgment was rendered for the plaintiffs in the sum of $2150.38, and the defendant sued out this writ of error.

Mr. C. La Rue Munson and *Mr. William H. Armstrong* for plaintiff in error. *Mr. Henry W. Watson* was with them on the brief.

Mr. Henry C. Parsons and *Mr. Henry C. McCormick* for defendants in error. *Mr. J. C. Hill* and *Mr. H. T. Ames* were with them on the brief.

Digitized by Google

MR. JUSTICE GRAY, after stating the case as above reported delivered the opinion of the court.

Assuming, what does not appear in the record, that the ev dence stated in the bills of exceptions was all the evidenc introduced at the trial and referred to in the certificate o division, that certificate is clearly insufficient to support th jurisdiction of this court.

Under the acts of Congress, authorizing questions arisin on a trial or hearing before two judges in the Circuit Cour and upon which they are divided in opinion, to be certified t this court for decision, it has always been held that each que tion certified must be one of law, and not of fact, nor o mixed law and fact, and that it must be a distinct point o proposition, clearly stated, and not the whole case, nor th question whether upon the evidence the judgment should b for one party or for the other. *Saunders* v. *Gould*, 4 Pe 392; *United States* v. *Bailey*, 9 Pet. 267; *Weeth* v. *New Eng land Mortgage Co.*, 106 U. S. 605; *California Paving Co.* v *Molitor*, 113 U. S. 609, 615–617; *Waterville* v. *Van Slyke*, 11 U. S. 699–704.

Tested by these rules, the first and second questions cert fied, each being whether "under the evidence" the defendar was authorized to receive interest at a certain rate, as well a the fourth question, "whether upon the whole evidence th plaintiff was entitled to recover," are not questions which th court is required or authorized to answer.

The third question is equally irregular and insufficient. I stead of being clearly and distinctly stated, it is quite obscu and ambiguous, for it does not show whether the suppose decision of the Supreme Court of Pennsylvania, "that the are no banks, nor have there been any such banks in Pennsy vania, authorized to take and receive interest at a greater ra than six per cent.," was based upon matter of law, or matt of fact, or both. The latest reported decision of that cou to which the learned counsel for the plaintiff in error referr to explain this question, affirmed a ruling of a lower cou that, "in fact and in law, there is no bank of issue in Pen

Digitized by Google

sylvania, authorized to charge a rate of interest in excess of the legal rate;" and said nothing upon the question whether there ever had been any such banks. *Lebanon National Bank* v. *Karmany*, 98 Penn. St. 65, 73.

Neither the amount of the judgment below, nor the certificate of division, being sufficient to give this court jurisdiction, it necessarily follows, as was held in *Weeth* v. *New England Mortgage Co.* and *Waterville* v. *Van Slyke*, above cited, that the

Writ of error must be dismissed.

WYLIE v. NORTHAMPTON BANK.

ERROR TO THE CIRCUIT COURT OF THE UNITED STATES FOR THE SOUTHERN DISTRICT OF NEW YORK.

Argued November 24, 1886. — Decided December 13, 1886

The robbery by burglars of securities deposited for safe-keeping in the vaults of a bank is no proof of negligence on the part of the bank.

It is competent for a national bank to take steps for the recovery of its property stolen by burglars, and to agree to take like steps for the recovery of the property of others deposited with it for safe-keeping and stolen at the same time; and want of proper diligence, skill, and care in performing such an undertaking is ground of liability to respond in damages for failure: but the evidence in this case failed to establish either such an agreement, or the want of diligence and care, and the jury was properly instructed to return a verdict for defendant.

This was an action against a national bank to recover the value of certain securities deposited in its vaults, and stolen therefrom by burglars. The case is stated in the opinion of the court.

Mr. George H. Adams for plaintiff in error cited: *National Bank* v. *Graham*, 100 U. S. 699; *Whitney* v. *Bank*, 1 Morrison's Transcript, 263; *S. C.* 50 Vt. 388; *Wiley* v. *Bank of Bratleboro*, 47 Vt. 546; *Baylis* v. *Travellers' Ins. Co.*, 113 U. S. 316, 320.

Digitized by Google

Mr. William G. Peckham (*Mr. Eliphalet Williams Tyler* was with him on the brief) for defendant in error cited: *Allegheny County Workhouse* v. *Moore*, 95 Penn. St. 408; *Chemical Bank* v. *Kohner*, 8 Daly, 530; *Bright* v. *Metarie Cemetery*, 33 La. Ann. 58; *Foster* v. *Essex Bank*, 17 Mass. 479; *S. C.* 9 Am. Dec. 168; *McLemore* v. *Louisiana Bank*, 91 U. S. 27; *Claflin* v. *Meyer*, 75 N. Y. 260; *First Nat. Bank* v. *Ocean Bank*, 60 N. Y. 278; *Dudley* v. *Scranton*, 57 N. Y. 424; *Parker* v. *Rensselaer & Saratoga Railroad*, 16 Barb. 315; *Delevan* v. *Simonson*, 35 N. Y. Superior Court, 243; *Ross* v. *Mather*, 51 N. Y. 108.

Mr. Justice Matthews delivered the opinion of the court.

This was an action in law originally commenced by the plaintiff in error in the Superior Court of the City of New York, and removed by the defendant into the Circuit Court. The complaint alleged, that, on the 26th day of January, 1876, the plaintiff was the owner of eight first mortgage bonds of the Pacific Railroad Company of Missouri, for $1000 each, with coupons attached, which, at that time, were in the custody of the defendant for safe-keeping under an agreement by which the defendant agreed to keep the same safely and deliver them to her upon demand, but that on that day the defendant's bank was broken into by burglars and a large amount of property taken by them therefrom, amounting in value to over $1,600,000, consisting chiefly of bonds, stocks, and other similar securities, with some money, the property in part of the bank and of others, and including the plaintiff's bonds and coupons; and it is averred that the said loss by robbery occurred in consequence of a want of due care on the part of the defendant.

It is further alleged by the plaintiff, that, shortly after the said loss, "the plaintiff was intending and was about to enter in good faith upon negotiations and to take measures for the recovery of her said bonds and coupons from whomsoever then possessed the same; that thereafter, and about the time last mentioned, the defendant represented to the plaintiff that

Digitized by Google

the defendant was about to take measures for the recovery of the property so taken, and expected to recover all of said property in bulk, or the greater part thereof, from the persons taking the same as aforesaid, by means of rewards and other measures, and was undertaking, or about to undertake, negotiations with said person or persons, to the plaintiff unknown, for accomplishing the same; and the defendant then further represented, that it expected to receive such restoration if it was allowed to act therein in behalf of the plaintiff and in behalf of other depositors and losers who were in the same position as the plaintiff; and the defendant further represented, that it, the said defendant, was in a better position to negotiate for the restoration of said property as aforesaid, and could accomplish the same at less expense, than if the plaintiff and other individuals, owners and losers of said property, were to act in that respect independently.

"That thereupon, and at or about the time last stated, the defendant requested the plaintiff to permit and authorize the defendant to act for her and in her behalf in the respects mentioned, and in such negotiations, for the recovery of her said bonds and coupons, with the bonds, stocks, securities, and other property of the defendant and other owners and losers of property as aforesaid; and further requested the plaintiff not to undertake negotiations with, or offer rewards or other inducements to the persons who had taken or were in possession of said bonds or other property as aforesaid, for the return of the same.

"That thereupon, and relying upon such representations and all of them, the plaintiff complied with such requests of defendant, and did not undertake negotiations with or offer rewards or other inducements to such persons as aforesaid for the return of her said bonds and coupons, and permitted and authorized the defendant to act for her and in her behalf in the respects mentioned, and as requested in such and any negotiations for the recovery of her said bonds and coupons, with the bonds, stocks, securities, and other property of the defendant and other owners and losers of said property as aforesaid.

Digitized by Google

"That thereupon the said defendant undertook to act in behalf of the plaintiff in the respects mentioned, and took certain proceedings and entered into certain negotiations with the persons who had taken said property or possessed the same as aforesaid, for the recovery of the same; that some time during the years 1879 and 1880, the defendant, acting as aforesaid, recovered and received from said persons the greater part of said stolen property, taken, as aforesaid, on the 26th day of January, 1876, including a large amount of the separate property of the defendant, amounting in all, in face or par value, to about $1,500,000; and thereupon the defendant settled and compounded with said persons for all claims arising or growing out of such taking or robbery as aforesaid.

"That the difference between the amount of property so recovered, and the amount of property taken or stolen on January 26, 1876, as aforesaid, and all the property so taken and not recovered, was by the defendant allowed and agreed to be retained by and released to the said persons as a consideration or reward for the restoration of the remainder, as aforesaid. That among the securities and property so allowed and agreed to be retained and so released by the defendant were the eight bonds of the plaintiff and all the coupons thereto belonging. That the plaintiff was not informed at the time by the defendant of the terms of said agreement or arrangement between the defendant and said persons, but all the proceedings of the defendant in those respects and for the restoration of such property were concealed from the plaintiff, and she has never consented to the action of the defendant therein.

"That by means of plaintiff's said property, together with other considerations, and by the total sacrifice of the plaintiff's said property, the defendant was enabled to recover, and did recover as aforesaid, a large amount of its own property and the property of its other depositors, and has reimbursed itself for the greater part of its losses in said robbery and for the expenses which the defendant incurred in respect to the matters herein mentioned.

"That the defendant, not regarding its promises and under-

Digitized by Google

takings, did not take due care of the plaintiff's interest as aforesaid, but, on the contrary, sacrificed the same for its own advantage, and so negligently and carelessly conducted itself with respect to the plaintiff's said property and interest, and took so little care thereof, that, by and through the mere neglect and improper conduct of the defendant and its servants, and by the wilful neglect of plaintiff's said interests so committed to its charge, the plaintiff has wholly lost her said property," for the value of which she accordingly asks judgment.

To this the defendant answered, admitting that securities to the amount in par value of about $1,600,000, belonging in part to the defendant and partly to its officers and other persons, were stolen from its vaults by armed burglars in January, 1876, and that among said securities were the bonds claimed by the plaintiff as plaintiff's property. The answer alleges that the bonds of the plaintiff, prior to the burglary, were held by the defendant in its vaults as a favor to the plaintiff, by permission of one of the defendant's officers, without the consent or agreement of the defendant, and were not on deposit with the defendant for any reward or consideration to the defendant, but were left on the special agreement made with the plaintiff that the bonds should remain at the risk of the plaintiff, and the defendant should in no case be responsible therefor; and alleges that it had no corporate power to make any contract or agreement, either with reference to the safe-keeping of the said bonds, or any such contract as that alleged in the complaint for their recovery, and that no such contract was in fact ever made, all the allegations of the complaint in that respect being denied. The answer further alleges, that the defendant, "while having no duty or obligation to the plaintiff in the premises, nevertheless did use good faith and due care in all the transactions mentioned in the complaint, and the defendant committed no breach of trust, and was guilty of no breach of trust, fraud, carelessness, or negligence whatever in any or all of said matters; but, on the contrary, defendant alleges, that, at its own expense, defendant enabled plaintiff to recover four of the eight

Digitized by Google

bonds, for the value of which plaintiff here sues defen ant;" and that the plaintiff's failure to recover back the r maining four of the eight bonds was caused solely by t carelessness and negligence of the agents employed by t plaintiff and not by the defendant.

By a pleading subsequently filed, and called a replicatio the plaintiff admitted that since the commencement of t action she had recovered four of the bonds mentioned in t complaint by means of an action of replevin against one Hen G. Pearson, then the postmaster of the city of New York, a reduced her claim accordingly.

The cause came on for trial by a jury, and the plaintiff, ha ing introduced evidence to maintain the issues on her pa rested her case, when, on a motion of the defendant, the cou instructed the jury to return a verdict for the defendant, whi was done. Judgment was rendered thereon in favor of t defendant, to reverse which this writ of error is now pro cuted.

The question of law for our determination, is whether the was sufficient evidence in support of the plaintiff's cause action to require its submission to the jury.

The evidence offered by the plaintiff on the trial of t cause tended to prove the following facts:

The burglary occurred in January, 1876. Efforts were i mediately made by the bank to recover the lost property; an about three weeks after the burglary, the officers and directo of the bank caused a meeting to be held at the bank, of so of the losers, including depositors for safe-keeping. Plaint did not attend this meeting, and it does not appear that s was represented there. At that meeting directors and offic of the bank were present, and it was proposed to form a co mittee composed of bank officers and depositors to take me ures to recover the stolen property. This was assented to the bank's officers, but was voted down, and the matter le as before, to the efforts of the bank.

In 1877 the plaintiff in error married Dr. Wylie, of Ne York, who thereafter acted for her in the matter. In t same year Dr. Wylie was informed, through a patient, that

Digitized by Google

could deal with Scott, one of the burglars, for the recovery of Mrs. Wylie's bonds. He did not at once act upon this, because he understood the bank was acting for his wife. Shortly thereafter, Dr. Wylie stated this proposition to Warrener, the vice-president and manager of the bank, and that he thought he could get back his wife's bonds. Warrener then requested Wylie not to negotiate independently of the bank, and stated that the bank was negotiating to get the securities back. To this request Wylie acceded.

On February 9, 1878, Wylie received from Hinckley, one of the prominent directors of the bank, a letter representing that he was acting for the bank, and enclosing the following paper, which he requested the plaintiff to sign:

"We, whose names follow, having suffered the loss of securities by the robbery of the Northampton National Bank in January, 1876, hereby agree to pay a *pro rata* proportion of the expenses incurred in obtaining them and returning them to us."

Hinckley wrote again, February 27, 1878, as he says, at the request of Warrener, and Edwards, the president, urging Mr. Wylie to sign the paper, and saying that they thought the property could be recovered "cheaper in bulk than in detail," and that they had "strong hopes of being able to effect a negotiation at no distant day, and would like to make one clean job of it." Thereupon, on March 21, 1878, Mrs. Wylie and her husband signed the paper as requested, and returned it to the bank.

In October, 1877, Edwards, the president of the bank, was notified by persons acting in behalf of Scott and Dunlap, two of the burglars then under sentence, that $100,000 of the best bonds had been put aside and money borrowed on them, and that the whole lot could be had for $8000; whereupon efforts were made to effect this recovery. To the knowledge of Edwards and the vice-president, Warrener, and upon consultation with them, Hinckley was allowed, however, to separately negotiate, through the same channel, for the return of $25,000 Union Pacific Railroad bonds, which were known to belong to him, on payment of $6000. These $25,000 of bonds were

Digitized by Google

a part of the $100,000 lot, and upon delivery were locked u
and the transaction concealed until June, 1878. After th
$6000 was paid, the difficulties of negotiation increased, th
persons holding the balance of $75,000 making exorbitant d
mands. While further negotiations for the $75,000 were pr
ceeding, Hinckley, though acting as an officer of the bank f
all parties concerned, and acting with Edwards and Warrene
again attempted to make his private bargain for $19,000 mo
of Union Pacific bonds supposed to be in the same lot. Th
return of the $19,000 was offered upon payment of $10,000
the parties holding them; which offer was refused, the pri
being considered too exorbitant. Further attempts were mad
to secure the return of the remaining $75,000, but the holde
of the securities refused all offers made for their return, an
the whole $75,000 were sent to Europe and negotiated
otherwise lost. On this subject, Hinckley wrote to Dr. Wyl
on May 10, 1879: "This I do know, that . . . no part of th
$75,000 left the country until some time in 1878, after I refus
to pay $10,000 for the balance, $19,000, of my U. P.'s. It w
my refusing to pay that sent them abroad. If I had accept
the offer, I have no doubt we could have got the whole $75,0
at 50 per cent. of the market value." Hinckley also wrote
Dr. Wylie: "The offer was a specific one for $25,000 U. P. S.
bonds. It came from the thieves, not from me, or any one
my interest. If the offer had been to return the Missou
Pacifics, you would have been notified, and not I. Eve
effort was made to induce the holders to name a price
which they would return the $100,000, but to no purpos
although I have good reason to believe that if I had accept
the second offer of 50 per cent. of the market value, somethin
might have been done."

In January, 1879, Dr. Wylie notified various bankers abro
of the theft of the bonds, and subsequently certain of th
coupons from said bonds were presented for payment,
which the plaintiff was notified by the railroad company, an
she replevied and recovered the same. It was then asce
tained for the first time, in June, 1879, that the bank had n
sent particulars of the robbery abroad further than that th

Digitized by Google

robbery had occurred, and such a list of bonds stolen, but the numbers of the bonds were not given; some circulars giving the numbers of the bonds and a general cable were sent to London, but no circulars were sent to Frankfort or elsewhere on the Continent.

In 1876 and 1877 indictments were found in Massachusetts against Scott and Dunlap, and also against Leary, Conners, and Draper, for this burglary. Scott and Dunlap were tried and convicted at Northampton; the others had not then been caught. Afterwards Draper was arrested and taken to Northampton, and remained there in jail untried about two and one half years; shortly before the expiration of which time, in 1880, Conners and Leary were arrested and taken to Northampton jail. Negotiations were conducted between the bank and Scott and Dunlap, then in State prison, and influence brought to bear upon them for the return of the property, and they finally stated to one of the directors that Leary had control of it. After Leary was arrested, Scott and Dunlap wrote a letter to him, which resulted in the greater portion of the property being recovered soon after Conners was taken to Northampton. Hinckley and Warrener went to New York to a safe deposit company there and brought it away. A little before or after this final recovery, Conners, Leary, and Draper were all discharged at Northampton without trials. The amount of property stolen was recovered, except about $12,000 cash and $70,000 to $80,000 par value of bonds and securities. The bulk of the negotiable coupon bonds were recovered; also all non-negotiable bonds, and all negotiable securities except about $80,000.

Hinckley testified that a final recovery was not made by or through him, and not by or through the means mentioned in the 1878 and 1879 letters to Wylie. Everything was futile until the final recovery. The bank or its officers did not agree that the plaintiff's bonds should be retained and released to the thieves, or any other person, as compensation for the restoration of the remainder. Of the coupons attached to the plaintiff's stolen bonds maturing prior to the commence-

Digitized by Google

ment of this action, twenty-eight have been recovered. Th
coupons were each for $30.

The value of the plaintiff's bonds, on January 31, 1882, v
$1080 for each bond, with unmatured coupons only attach
Of the plaintiff's bonds so stolen, four have been recovered
her.

The complaint in this case may be considered as embrac
two distinct causes of action: the first, founded on the alle
negligence of the defendant in the original loss of the bo
and the second, on negligence alleged to have occurred in
execution of the agreement for their recovery. It was deci
in the case of *National Bank* v. *Graham*, 100 U. S. 699, 7
that it would "be competent for a national bank to receiv
special deposit of such securities as those here in quest
either on a contract of hiring or without reward, and it wo
be liable for a greater or less degree of negligence acc
ingly." In the present case, it is conceded that there is
evidence of negligence on the part of the bank resulting in
original loss by robbery, except the mere fact of the loss it
by that means. The plaintiff's case, therefore, upon this ca
of action is without proof.

As to the second cause of action, the facts stated in the c
plaint seem to us to be sufficient, if proven, to constitute a le
liability on the part of the defendant. It would certainly
competent for a national bank to take measures for the
covery of its own property lost in the way described. If
loss, as in the present case, included the property of oth
and it was deemed best, having reference to the bank's o
interest, that these measures should be taken by the b
alone for itself and all concerned, it might lawfully undert
to act for others thus jointly concerned with itself as wel
for itself alone; and want of proper diligence, skill, and c
in the performance of such an undertaking would be grou
of liability, to respond in damages for such failure. M
more would the bank be liable, in such a case, if, in the p
formance of such an undertaking, it used the property of
plaintiff for the recovery of its own. This, it is alleged in
complaint in this case, the defendant did. There is a to

Digitized by Google

want of evidence to this effect, and that ground of complaint was very properly abandoned.

The plaintiff, therefore, must stand upon the remaining allegations, which may be reduced to two: 1st, That the bank did make such an agreement to act as the plaintiff's agent in the recovery of her property; and, 2d, That it was guilty of a want of due care and diligence in the performance of its duty as such, whereby the loss occurred. On both of these points we think there was no evidence to charge the defendant sufficient to require it to be submitted to the jury. The meeting referred to in the evidence, called by the bank, of those interested with itself in the recovery of the stolen property, resulted in no such agreement. The bank had before that been taking such measures for that purpose in its own behalf, and incidentally for the others, as it deemed best. The proposal made at the meeting to put the matter in charge of a joint committee of the officers of the bank and individual losers was rejected. The bank continued thereafter to prosecute the matter as it had been doing from the beginning. The communications which subsequently took place between Dr. Wylie, the plaintiff's husband, and Mr. Warrener, the vice-president and manager of the bank, based on the information which the former had received from his patient, that he could deal with Scott, one of the burglars, for the recovery of his wife's bonds, and the reply made by Mr. Warrener requesting him not to institute an independent negotiation, on the ground that it might interfere with the success of those which the bank was then prosecuting, do not tend to prove a contract by which the bank assumed to act as the plaintiff's agent in the matter, which bound the bank to take any other measures than such as it was then pursuing, or which obliged the plaintiff not to undertake any separate negotiations of her own. At the most, it can be considered only as a friendly understanding, between two parties having like interests, in respect to the course deemed best for the interests of both.

But, even if it could be supposed that there was proof of a distinct agreement, such as is alleged, whereby the bank agreed, in consideration of the plaintiff's desisting from any

Digitized by Google

separate efforts on her own behalf to prosecute measures fo recovery of her property equally with that of the bank an others, there is still an entire failure of evidence to establish as against the bank, any failure of performance on its part It seems to have acted with promptness, with diligence, wit skill, and with success. The great bulk of the stolen propert was in fact recovered through its exertions and instrumentali ties. This recovery included one half in number of the bond lost by the plaintiff, and no part of the plaintiff's property wa used or sacrificed to save what was secured.

The particular circumstances in regard to the recovery b Hinckley of his Union Pacific Railroad bonds, which seem t form the chief matter of complaint on the part of the plaintif do not seem to us to warrant any inference against the bank Hinckley, although a director of the bank, had an individua interest in the bonds, and the information which led to hi negotiations and the recovery of a portion of them, came t him directly because he was the only owner of bonds of tha description included in the loss. He was, therefore, allowe by the bank, without objection, to negotiate separately fo their return. He recovered $25,000 by the payment of $6000 but $19,000 additional he was unable to obtain, except upo payment of what he deemed to be an exorbitant demand, wit which he was unwilling to comply. It is supposed tha Hinckley's bonds were a part of the lot amounting in all t $100,000; it is also supposed that this lot included some of th plaintiff's bonds; and it is also supposed that, in consequenc of Hinckley's refusal to continue negotiations for the recover of the remainder of his own bonds, the holders secretly ser them to Europe, where they passed into the hands of innocer holders and became lost beyond recovery; but all this is me matter of conjecture. There is absolutely in the case no ev dence whatever, either that any part of the bonds of the plai tiff constituted a portion of this lot of $100,000, nor that the could have been recovered, either without Hinckley's interfe ence, or if he had pursued his negotiations; nor that the bon were sent abroad by reason of anything done or omitted b him. Hinckley does, indeed, state, in a letter written by hi

Digitized by Google

to the husband of the plaintiff, that he had reason to suppose that the whole lot of $100,000 might have been purchased for fifty cents on the dollar, but no facts are stated as the ground for this opinion, and there is no proof beyond the conjecture itself. Neither is there any reason to conclude that the bank was responsible either for what Hinckley did or failed to do. There is no evidence to warrant the conclusion that anything the bank could have done, beyond what was done, would have resulted more favorably to the plaintiff.

In our opinion, therefore, the court below was justified in its ruling upon the evidence, instructing the jury to return a verdict for the defendant. The judgment is accordingly

Affirmed.

NEWTON v. FURST AND BRADLEY COMPANY.

APPEAL FROM THE CIRCUIT COURT OF THE UNITED STATES FOR THE NORTHERN DISTRICT OF ILLINOIS.

Argued December 3, 1886. — Decided December 13, 1886.

The first claim of reissued letters-patent No. 8986, granted to Robert Newton, December 2d, 1879, for an improvement in gang-ploughs, (the original patent, No. 56,812, having been granted to F. S. Davenport, as inventor, October 9th, 1886,) namely, "1. In a wheel-plough, the combination, with a swing-axle and ground or carrying-wheel, of friction-clutch mechanism, and means for engaging and disengaging the latter with the ground or carrying-wheel, said parts being constructed and adapted to raise the plough by locking the swing-axle to the carrying-wheel by friction-clutch engagement, and raise the plough-beam by the draft or power of the team, substantially as set forth," is, in view of the state of the art at the time of the invention of Davenport, not infringed by an apparatus in which the axle and the friction-clutch mechanism are different, as devices, from those of the patent.

The first claim of the reissue is invalid, the reissue having been applied for more than thirteen years after the original patent was granted, and after the defendant had begun to make machines of the pattern complained of.

The defendant's machine did not infringe the original patent, and the reissue was taken to cover it.

Digitized by Google

This was a bill in equity to recover for the infringement o letters-patent. The case is stated in the opinion of the court

Mr. Lewis L. Coburn for appellant.

Mr. L. L. Bond for appellees.

Mr. Justice Blatchford delivered the opinion of the court

This is a suit in equity brought in the Circuit Court of th United States for the Northern District of Illinois by Rober Newton against the Furst and Bradley Manufacturing Com pany and others, to recover for the infringement of reissue letters-patent No. 8986, granted to the plaintiff, December 2d 1879, on an application, filed October 15th, 1879, for an im provement in gang-ploughs, (the original patent, No. 56,812 having been granted to F. S. Davenport, as inventor, Octobe 9th, 1866).

The specification and claims of the original, and those o the reissue, and the drawings of the reissue, are as follows the parts in each which are not found in the other being i italic:

Original.

"Be it known that I, F. S. Davenport, of Jerseyville, Jersey county, and State of Illinois, have invented a new and improved *gang*-plough; and I do hereby declare that the following is a full, clear, and exact description thereof, which will enable others skilled in the art to make and use the same, reference being had to the accompanying drawings, [p. 376] forming part of this specification, *in which*—

Reissue.

"Be it known that I, F. S Davenport, of Jerseyville, Jer sey county, and State of Illi nois, have invented a new an improved *wheel*-plough; and do hereby declare that the fol lowing is a full, clear, and ex act description thereof, which will enable others skilled i the art to make and use th same, reference being had t the acompanying drawings forming part of this specifica tion. [See page 376.]

Digitized by Google

The object of my invention is to provide improved means for utilizing the draft of the team in raising a plough from the ground; and to this end my invention consists, first, in the combination, with a swing-axle and ground or carrying-wheel, of friction-clutch mechanism and means for engaging and disengaging the latter with the ground or carrying-wheel, said parts being constructed and adapted to raise the plough by locking the swing-axle to the carrying-wheel by friction-clutch engagement, and raise the plough-beam by the draft or power of the team; second, in the combination, with a ground-wheel, a swing-axle, and a plough-beam connected with the latter, of clutch mechanism connected to the axle and adapted by engagement with the wheel to utilize the draft of the team in turning the swing-axle into upright position, and thereby raise the plough-beam; third, in the combination, with a ground-wheel, a swing-axle, and a plough-beam connected to the latter, of a friction-clutch connected to the axle and adapted, by contact with the wheel, to turn the axle into upright position, and thereby raise the plough-beam by the aid of the draft of the team.

Digitized by Google

Opinion of the Court.

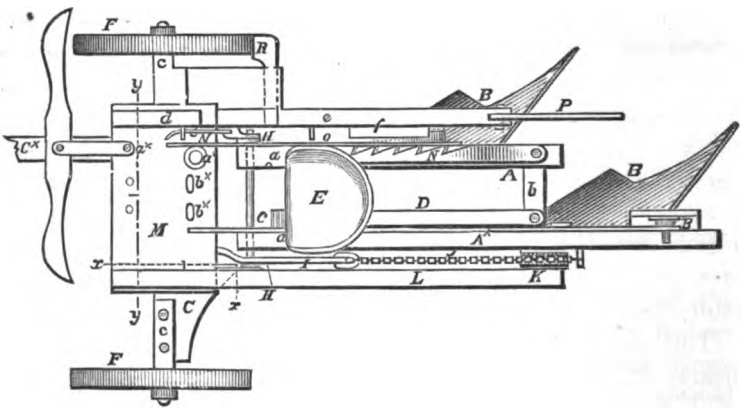

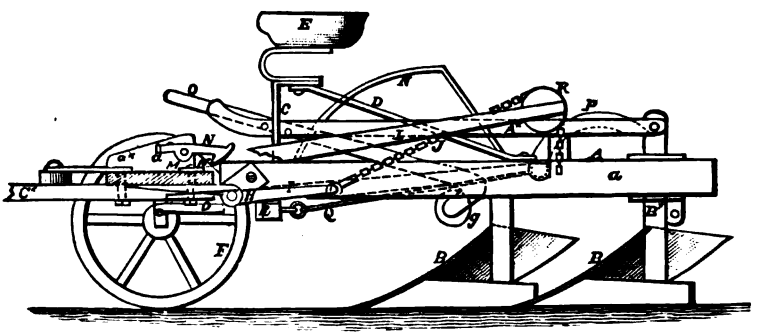

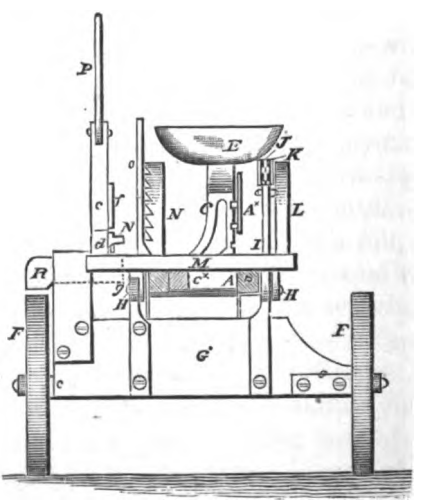

Digitized by Google

Figure 1 is a plan or top view of my invention; Fig. 2, a side view of the same, partly in section, as indicated by the line *x x*, Fig. 1; Fig. 3, a transverse vertical section of the same, taken in the line *y y*, Fig. 1. Similar letters of reference indicate like parts. [See page 376.]

This machine consists of a frame, A, made of two parallel beams or bars, *a a*, braced together near the front and back pieces, *b b*. From each of these beams or bars depends a plough, B. To the front cross-piece is bolted an iron standard, C, strengthened by an iron stay, D, running down to the back cross-piece. To the top of the standard, C, is attached a spring seat, E, the whole supported upon two wheels, F F, each turning upon *an iron axle, c, attached to a hinged board*, G.

It will be observed that one of the *axles*, *c*, is attached to the front or upper side of the *hinged board*, G, and the other to the back or under side, in such a manner that when it is turned down in a horizontal position to lower the ploughs to the ground, the wheel that runs in the furrow will be as much lower than the other as

Referring to the drawings [p. 376], Figure 1 is a plan or top view of my invention; Fig. 2 *is* a side view of the same, partly in section, as indicated by the line *x x*, Fig. 1; Fig. 3 *is* a transverse vertical section of the same, taken in the line *y y*, Fig. 1. Similar letters of reference indicate like parts.

This machine consists of a frame, A, made of two parallel beams or bars, *a a*, braced together near the front and back pieces, *b b*. From each of these beams or bars depends a plough, B. To the front cross-piece is bolted an iron standard, C, strengthened by an iron stay, D, running down to the back cross-piece. To the top of the standard, C, is attached a spring seat, E, the whole supported upon two wheels, F F, each turning upon *a journal*, *c*, *of* a *swing-axle*, G.

It will be observed that one of the *journals*, *c*, is attached to the front or upper side of the *swing-axle*, G, and the other to the back or under side, in such a manner that when it is turned down in a horizontal position to lower the ploughs to the ground, the wheel that runs in the furrow will be as much lower than

Digitized by Google

the depth of the furrow may require. The *axle* that carries the wheel that runs in the furrow is so formed that it may be removed from the back of the *hinged board* and *bolted* to the front, so that the machine may run level when there is no furrow for the wheel to run in, as is the case when preparing the ground for cotton seed.

The *hinged board* G is attached to the plough-frame by two iron hinges, H H′, the one H on the side of the long beam forming an arm or lever, I, to which is attached a chain, J, which passes over a wheel, K, and is made fast to the plough-frame. The wheel K turns upon a stud in the end of a lever, L, this lever being bolted to the foot-board M, which is hinged to the plough-frame in the same manner and at the same place as the axle-*board* G. To the opposite end of the foot-board is bolted a bracket or stop, *d*, against which rests an arm, *e*, by which the *hinged board* G is operated, the arm *e* being held in the vertical position by a latch, N, which is lifted by placing the foot on the back part of it.

Now, it will be seen that to

the other as the depth of t
furrow may require. T
journal that carries the whe
that runs in the furrow is
formed that it may be remov
from the back of the *swi*
axle and *be secured* to the fro
so that the machine may r
level when there is no furr
for the wheel to run in, as
the case when preparing t
ground for cotton seed.

The *swing-axle* G is attach
to the plough-frame by tw
iron hinges, H H′, the one
on the side of the long bea
forming an arm or lever,
to which is attached a cha
J, which passes over a whe
K, and is made fast to t
plough-frame. The wheel
turns upon a stud in the e
of a lever, L, this lever bei
bolted to the foot-board
which is hinged to the ploug
frame in the same mann
and at the same place as t
axle G. To the opposite e
of the foot-board is bolted
bracket or stop, *d*, again
which rests an arm, *e*,
which the *swing-axle* G
operated, the arm *e* being he
in the vertical position by
latch, N, which is lifted
placing the foot on the ba
part of it.

Now, it will be seen that

Digitized by Google

lower the *ploughs* to the ground it is only necessary to bring down the arm *e* till a block, *f*, which is bolted to its side, rests upon a *roller*, *g*, of a lever, O, which is secured in the required position by a notched quadrant, N. It will be observed, that, as the lever O is moved forward from notch to notch, the ploughs will cut deeper and deeper, and the reverse as it is drawn back. By these details the driver has entire control of the depth of the furrow without moving from his seat or stopping the machine.

Through a mortise in the top of *the* arm *e* passes a small iron lever, P, to which is attached a rod, Q, connecting it with a brake, R, which acts upon one of the wheels F, the brake R working upon a pin fixed in a block of wood or an iron plate fastened to the front side of the *hinged board* G. The object of this brake is to facilitate the operation of lifting the ploughs out of the ground when the machine is moving forward, for by applying but a little force to the lever P the brake is pressed sufficiently hard to the wheel to turn the *hinged board* to the vertical position.

lower the *plough* to the ground it is only necessary to bring down the arm *e* till a block, *f*, which is bolted to its side, rests upon a *stop*, *g*, of a lever, O, which is secured in the required position by a notched quadrant, N. It will be observed, that, as the lever O is moved forward from notch to notch, the ploughs will cut deeper and deeper, and the reverse as it is drawn back. By these details the driver has entire control of the depth of the furrow without moving from his seat or stopping the machine.

Through a mortise in the top of arm *e* passes a small iron lever, P, to which is attached a rod, Q, connecting it with a brake, R, which acts upon one of the wheels F, the brake R working upon a pin fixed in a block of wood or an iron plate fastened to the front side of the *swing-axle* G. The object of this brake is to facilitate the operation of lifting the ploughs out of the ground when the machine is moving forward, for by applying but a little force to the lever P the brake is pressed sufficiently hard to the wheel to turn the *swing-axle* to the vertical position.

Digitized by Google

The draft-pole or tongue C† is fastened to the under side of the foot-board M by two bolts, *a*†, a number of holes being made, so that the tongue may be moved to the right or left to give the required land to the ploughs. The back holes *b*† are made oblong, so that *it* can be slanted when needed. The tongue may, if necessary, be used on either side of the draft-line, and the double tree attached to the foot-board independent of the tongue. This arrangement is chiefly for the convenience of using three horses abreast.

When the *hinged board* G is turned down in the horizontal position the lever or arm I gives the chain J, which is attached to it, considerable slack, allowing the tongue to move up and down without influencing the ploughs, constituting what is commonly called 'a limber tongue.'

In regard to raising the ploughs out of the ground, it will be observed that the front part of the machine is lifted nearly two-thirds of its course before the lever I tightens the chain and commences to lift the back part. This contrivance produces an easy

The draft-pole or tongue C[x] is fastened to the under side of the foot-board M by two bolts, *a*[x], a number of holes being made, so that the tongue may be moved to the right or left to give the required land to the ploughs. The back holes *b*[x] are made *as* oblong *slots*, so that *the tongue* can be slanted when needed. The tongue may, if necessary, be used on either side of the draft-line, and the double tree attached to the foot-board independent of the tongue. This arrangement is chiefly for the convenience of using three horses abreast.

When the *swing-axle* G is turned down in the horizontal position the lever or arm I gives the chain J, which is attached to it, considerable slack, allowing the tongue to move up and down without influencing the ploughs, constituting what is commonly called a 'limber tongue.'

In regard to raising the ploughs out of the ground, it will be observed that the front part of the machine is lifted nearly two-thirds of its course before the lever I tightens the chain and commences to lift the back part. This contrivance produces an easy motion

Digitized by Google

motion, without causing either jerk or strain upon the horses or the machine.

The hind plough can be raised or lowered independent of the other, the standard B′ sliding in an iron block, O†, and operated by a lever, A†, extending forward to the front of the seat, and secured in the required position by notches in the side of the seat-standard, as shown in Fig. 3.

I claim as new and desire to secure by letters-patent —

1. *The lever P, rod Q, and brake R, arranged and operated as and for the purpose described.*

2. *The hinged board G, in connection with the reversible axles, substantially as and for the purpose described.*

3. *The lever O and quadrant N, for regulating the depth of the furrow, substantially as and for the purpose specified.*

4. *Lifting the hind part of the machine by means of the lever or arm I, in connection with the chain J, wheel K, and lever L, these parts operating together, substantially as and for the purpose described.*

5. *Hinging the foot-board*

without causing either jerk or strain upon the horses or the machine.

The hind plough can be raised or lowered independent of the other, the standard B′ sliding in an iron block, O×, and operated by a lever, A×, extending forward to the front of the seat, and secured in the required position by notches in the side of the seat-standard, as shown in Fig. 3.

Having fully described my invention, what I claim as new, and desire to secure by letters-patent, *is* —

1. *In a wheel-plough, the combination, with a swing-axle and ground or carrying-wheel, of friction-clutch mechanism, and means for engaging and disengaging the latter with the ground or carrying-wheel, said parts being constructed and adapted to raise the plough by locking the swing-axle to the carrying-wheel by friction-clutch engagement, and raise the plough-beam by the draft or power of the team, substantially as set forth.*

2. *In a wheel-plough, the combination, with a ground-wheel, a swing-axle, and a plough-beam connected to the latter, of clutch-mechanism connected to the axle, and adapted, by engage-*

Digitized by Google

M to the plough-frame, as described.

6. *Securing the tongue or draft-pole to the foot-board M, in the manner and for the purpose described.*

7. *The sliding plough-standard B', guide-block O†, lever A†, and notched seat-standard C, when used together and in connection with the other parts.*

8. *Connecting the lever L with the tongue or draft-pole by fastening it to the foot-board, the whole operating together, substantially as and for the purpose set forth.*"

ment with the wheel, to utilize the draft of the team in turning the swing-axle into upright position, and thereby raise the plough-beam, substantially as set forth.

3. *In a wheel-plough, the combination, with a ground-wheel, a swing-axle, and a plough-beam connected to the latter, of a friction-clutch connected to the axle, and adapted, by contact with the wheel, to turn the axle into upright position, and thereby raise the plough-beam by aid of the draft of the team, substantially as set forth.*"

The answer sets up, among other defences, non-infringement; and that the reissued patent is invalid because not for the same invention as the original. On a hearing on proofs, the Circuit Court entered a decree, which finds that the equities are with the defendants, and that they do not infringe on the rights of the plaintiff, and dismisses the bill. The plaintiff has appealed to this court.

By the opinion of the Circuit Court in the case, 11 Bissell, 405, it appears that the defences of non-infringement and of the invalidity of the reissue were sustained. Infringement is not asserted in this court as to any claim of the reissue but the first.

In regard to the subject-matter of that claim, the specification of the reissue states that the invention consists "in the combination, with a swing-axle and ground or carrying-wheel, of friction-clutch mechanism, and means for engaging and disengaging the latter with the ground or carrying-wheel, said parts being constructed and adapted to raise the plough by locking the swing-axle to the carrying-wheel by friction-clutch engagement, and raise the plough-beam by the draft or power

Digitized by Google

of the team." The first claim of the reissue uses the same language, with the prefix of the words "in a wheel-plough," and the addition, at the end, of the words "substantially as set forth."

The other alterations made in the specification are, that "*gang*-plough" is changed into "*wheel*-plough;" "*iron axle*" into "*journal;*" and "*hinged board*" into "*swing-axle.*"

The first claim of the original patent is for a combination of the lever P with the rod Q and the brake R. When force is applied to the lever P, motion is communicated through the rod Q to the brake R, which brake acts on the periphery of one of the two supporting or carrying-wheels F, the axle of which, *c*, is attached to a hinged board G, and by the action of the brake the hinged board is changed from a horizontal position to a vertical position, and the effect is to facilitate the operation of lifting the ploughs out of the ground. The first claim of the original patent covers only the combination of the three specific devices — the lever P, the rod Q, and the brake R. The first claim of the reissue calls the brake R "friction-clutch mechanism," and calls the lever P and the rod Q "means for engaging and disengaging the latter with the ground or carrying-wheel," and then claims the combination of four things — (1) friction-clutch mechanism; (2) means for engaging and disengaging it with the ground or carrying-wheel; (3) a swing-axle; (4) a ground or carrying-wheel.

The hinged board G of the plaintiff's original patent is ten or twelve inches wide, and at each end of it is a spindle for one of the two ground or carrying-wheels to run on, the spindles being in line with one edge of the hinged board. The forward ends of the plough-beams are attached by joints to what is the back edge of the hinged board while that board is horizontal, so that when it comes to be vertical by the action of the brake and the forward movement of the team, the forward ends of the plough-beams are raised in height a distance equal to the width of the hinged board, lifting the ploughs.

The defendants' machine is thus described in the opinion of the Circuit Court, and the description is conceded by the counsel for the plaintiff to be a fair one: "The defendants' machine

Digitized by Google

is a wheel or sulky plough, with a bent or cranked iron axle, upo which the plough-beams are pivoted at about two-thirds of th distance from the forward end to the coulter, so that the plough is nearly balanced upon the axle or crank, and the arrangement of the mechanism is such, that when the plough is runnin or operating in the ground, the crank part is in a horizontal position, and, when it is desired to raise the ploughs out of th ground, the crank is turned upward towards a vertical positio whereby the forward ends of the beam are raised until th point of the plough runs out of the ground. After the forwar end of the beam has risen to a certain point, it strikes a sto so that, when the crank has assumed a vertical position, th plough is balanced across the crank part of the axle, thus sustaining the plough at the height above the ground of the cran when in a vertical position. This turning of the crank-axl so as to lift the plough, is accomplished by a friction band o brake, which is made to engage with an inner extension of th hub of one of the carrying-wheels, so that, as the wheel move forward, it causes the crank-axle to turn upwards from a horizontal to a vertical position."

The Circuit Court was of opinion, that, if the state of th art was such as to entitle Davenport to a broad claim for an device by which the plough is lifted by the power of the team through a brake or friction-clutch, the defendants' machin would infringe. But the court found that, prior to Davenpor devices had been used in agricultural implements for utilizin by means of a brake the motion of the carrying-wheel, throug a crank-axle, in raising operative parts of the machine fro the ground, which devices were so alike in structure and analogous in use to those of Davenport, as to require his clain to be limited to his specific devices. In view of those pri devices the Court held that the defendants' friction-ban could not be regarded as the same means for engaging an disengaging the carrying-wheel and the axle as the brake o Davenport; and that the defendants' crank-axle was not th plaintiff's hinged board. In these views we concur.

The reissue was applied for more than thirteen years afte the original was granted, and after the defendants had begu

Digitized by Google

to make machines of the pattern now complained of. The original patent did not make a swing-axle and a carrying-wheel elements in the combination of the first claim of that patent. The reissue was evidently taken to cover the defendants' machine, which did not infringe the first claim of the original patent, because it did not have the Davenport brake R. No mistake or inadvertence is shown. The plaintiff, in his testimony as a witness, assigns as a reason for the reissue, that he thought there "was a mistake and a deficiency in the patent;" that he did not consider that other manufacturers respected it; that he considered it deficient because it applied the friction-brake to the periphery of the wheel; and that he believed the patent was entitled to cover different friction-clutch devices, so as to be a better protection against infringers.

Without pursuing the subject further, we are of opinion that, within numerous decisions of this court, the reissued patent is invalid, as respects its first claim.

Decree affirmed.

STREET v. FERRY.

APPEAL FROM THE SUPREME COURT OF THE TERRITORY OF UTAH.

Submitted November 23, 1886. — Decided December 13, 1886.

The jurisdictional value referred to in c. 355, 23 Stat. 443, is the value at the time of the final judgment or decree; not at the time of the appeal or writ of error.

The patent referred to in the second section of the act is a patent for an invention or discovery, not a patent for land.

After examining affidavits in the cause filed in the court below after allowance of appeal, and in this court since the case was docketed, the court is satisfied that the value of the land in dispute is not sufficient to give jurisdiction.

This was an action for the recovery of real estate. Judgment for plaintiff and appeal. The appellee moved to dismiss

Digitized by Google

the appeal on the ground that the value of the premises in dispute did not exceed five thousand dollars, and also to affirm the judgment below.

Mr. J. G. Sutherland and *Mr. Arthur Brown* for the motion.

Mr. John A. Marshall opposing.

MR. CHIEF JUSTICE WAITE delivered the opinion of the court.

This appeal was taken since the act of March 3, 1885, c. 355, 23 Stat. 443, went into effect. That statute, by § 1, limits appeals to this court from the Supreme Courts of the Territories and from the Supreme Court of the District of Columbia to cases where the value of the matter in dispute exceeds five thousand dollars, except, by § 2, the validity of a patent or copyright is involved, or the validity of a treaty or a statute, or an authority exercised under the United States is drawn in question. The value here referred to is the value at the time of the final judgment or decree, not at the time of the appeal or writ of error. Nothing whatever appears on the face of the record proper to show the value of the matter in dispute. The judgment was rendered July 22, 1886, and an appeal allowed the same day in open court. Affidavits of value were filed in the court below after this allowance, and these affidavits were sent here with the transcript. Other affidavits have been filed in this court since the case was docketed, and, on consideration of the whole, we are satisfied that the value is not sufficient to give us jurisdiction. The appellant himself puts the value of the land alone at only four thousand dollars, and the fair inference, from all the affidavits taken together, is, that the improvements on the land are worth much less than one thousand dollars. A large number of witnesses, who seem to be well qualified to judge of the value, put it at from $3000 to $3500, including all improvements.

The patent referred to in the second section of the act is a patent for an invention or discovery, not a patent for land.

The motion to dismiss is granted.

Digitized by Google

WILSON v. BLAIR.

ERROR TO THE CIRCUIT COURT OF THE UNITED STATES FOR THE DISTRICT OF NEBRASKA.

Submitted November 15, 1886. — Decided December 13, 1886.

When the record in the court below is silent as to the value of the matter in dispute, it is good practice for that court to allow affidavits and counter affidavits of value to be filed under directions from the court.

The burden of proof is on plaintiff in error, when the record is silent as to the value of the subject-matter in dispute, to establish that it is of the jurisdictional value.

This was an action for the possession of real estate. Judgment for plaintiff. Defendant sued out this writ of error. The defendant in error moved to dismiss for want of jurisdictional value in the matter in dispute.

Mr. Lewis A. Groff, *Mr. C. S. Montgomery*, and *Mr. M. H. Sessions* for the motion.

Mr. C. O. Whedon and *Mr. J. C. Crooker* opposing.

Mr. Chief Justice Waite delivered the opinion of the court.

Our jurisdiction in this case depends on the value of the matter in dispute. Final judgment was entered in the action May 24, 1884. At that time there was nothing in the record to show the value. On the 16th of September, 1884, on motion, leave was given the defendant in the court below to file affidavits of value that day, and the plaintiff to file counter affidavits in twenty days. This was good practice, and, if oftener adopted, would save trouble to parties and to us. Under this leave, and others of a similar character, which were afterwards granted, a considerable number of affidavits were filed by both parties. The affidavits were contradictory, some having a tendency to prove that the value was more than five thousand dollars, and others that it was less. On the 5th of May, 1885, the district judge, without formally deciding the question of value, allowed a writ of error, thus sending the

Digitized by Google

case here on the affidavits, free from any decision whatever the court below as to their effect. In this respect the ca differs from *Gage* v. *Pumpelly*, 108 U. S. 164, where the a peal was allowed by the court in session after considering t affidavits; and from *Zeigler* v. *Hopkins*, 117 U. S. 683, whe the value was found as one of the facts in the case.

The burden of showing jurisdiction is on the plaintiff error. He must establish as a fact by a fair preponderance testimony that the value of the property in dispute exce five thousand dollars. This he has not done. Two witnes swear that the property is worth more than six thousand d lars, and eight that it is worth five thousand dollars, " more." These are for the plaintiff in error, but there a eight on the other side who say it is worth only from ab $3000 to about $3500, and the certificate of the county cl shows that it was valued for taxation in 1884 at only sev hundred dollars. Under these circumstances, we think t decided preponderance of the evidence is against our juris tion, and the motion to dismiss is therefore granted.

Dismiss

JOHNSON *v.* CHICAGO AND PACIFIC ELEVAT COMPANY.

ERROR TO THE SUPREME COURT OF THE STATE OF ILLINOIS.

Argued November 20, 1886. — Decided December 13, 1886.

The jib-boom of a vessel towed by a steam-tug, in the Chicago River, at C cago, Illinois, struck a building on land, through the negligence of the t and caused damage to it, and the loss of shelled corn stored in it. A stat of Illinois gave a lien on the tug for the damage, to be enforced by a *in personam* against her owner, with an attachment against the tug, an judgment *in personam* against her owner and the surety in a bond her release. In such a suit, in a court of Illinois, to recover such da age, such a bond having been given, conditioned to pay any judgmen the suit, and the tug having been released, an application afterwards J., claiming to be part owner of her, to be made a defendant in the s was denied, and a judgment for the damage was given against the

Digitized by Google

fendant and the surety in the bond, without personal notice to the latter, which was affirmed by the Supreme Court of Illinois. On a writ of error from this court: *Held*,

(1) The cause of action was not a maritime tort of which an Admiralty Court of the United States would have jurisdiction;

(2) The State could create the lien and enact rules to enforce it, not amounting to a regulation of commerce, or to an admiralty proceeding *in rem*, or otherwise in conflict with the Constitution of the United States;

(3) The actual proceeding in this case was a suit *in personam*, with an attachment to enforce the lien, and was not forbidden by that Constitution;

(4) The provision of subdivision 6, of § 9, of article 1, of the Constitution of the United States, in regard to giving a preference to the ports of one State over those of another, is not a limitation on the power of a State;

(5) The judgment against the surety was proper, as the statute provided for it, and formed part of the bond;

(6) J. was not unlawfully denied a hearing, because he did not apply to be made a defendant until after the tug was discharged.

On the 22d of September, 1881, the Chicago & Pacific Elevator Company, an Illinois corporation, filed a petition in the Circuit Court of Cook County, Illinois, setting forth that, on the 29th of August, 1881, it was the proprietor of a warehouse on the land, in Cook County, near the bank of the Chicago River, which had stored in it a quantity of shelled corn; that on that day Jacob Johnson, a resident of Chicago, in said county, was the owner of the tug-boat Parker, of above five tons burthen, used and intended to be used in navigating the waters and the canals of Illinois, and having its home port in Illinois; that the Parker, on that day, was towing a schooner, attached to her by a hawser, in the Chicago River, in said county, the schooner being under the control of the officers of the tug; and that the tug and the schooner were so negligently managed, and the schooner was so negligently towed, by those having control of the tug, that the jib-boom of the schooner went through the wall of the warehouse, whereby a large quantity of the corn ran out and was lost in the river, causing a damage of $394.38 to the petitioner. The petition prayed for a writ of attachment against Johnson, to be issued to the sheriff, commanding him to attach the tug and to sum-

Digitized by Google

mon the defendant to appear, and for a decree subjecting t
tug to a lien, for such damages.

On the giving of the required bond on behalf of the pe
tioner, a writ of attachment was issued on the same day
the sheriff, commanding him to attach the tug and to summ
Johnson to appear on the 17th of October. The return of t
sheriff stated that he had attached all the right, title, a
interest of Johnson in and to the tug, and had served the w
on Johnson personally, on the same day.

A bond was given on the same day, executed by Johns
as owner of the tug, as principal, and Henry A. Christy,
surety, conditioned to pay all money which should be adjudg
by the court in the suit to be due to the petitioner. The
upon a writ was issued to the sheriff, commanding him
return the attached property to Johnson, which was done.

On the 17th of October, Johnson filed a paper called
"demurrer and exceptions," setting up, among other thin
that the court had no jurisdiction to create or enforce a l
on the tug. On the 21st of October, the plaintiff entered
motion that the default of the defendant be taken for want
an affidavit of merits. On October 31st, after the denial o
motion by the defendant for leave to file an affidavit of mer
the court entered of record the default of the defendant
the want of such an affidavit, and a judgment "that the pla
tiff ought to recover of the defendant its damages by reason
the premises." At the same time the defendant entered
motion to vacate the default, insisting on the want of ju
diction in the court.

On the same day, James B. Carter, alleging that he w
when the attachment was levied, and still continued to be
part owner of the tug, filed a motion that he be made a d
fendant, and be permitted to defend against the petition.

On the 5th of November, the motion of Johnson to vac
the default against him was overruled; and the motion of C
ter was denied. Thereupon Johnson filed a motion to dism
the petition for want of jurisdiction in the court to enforce t
lien claimed, because the tug was a steam vessel of above
tons burthen, duly enrolled and licensed in conformity to Ti

Digitized by Google

L. of the Revised Statutes of the United States, and was engaged in the business of domestic commerce and navigation on the navigable waters of the United States, and that exclusive jurisdiction to enforce a lien *in rem* on the tug was in the District Courts of the United States. This motion was denied.

Proper bills of exceptions were allowed to the foregoing rulings.

On the 30th of January, 1882, the damages were assessed by a jury at $300; and a judgment was entered in favor of the plaintiff against Johnson and Christy, for $300 and costs, on the 11th of February, 1882. They excepted, and they and Carter appealed to the Appellate Court for the First District of Illinois. That court, in July, 1882, affirmed the judgment of the Circuit Court of Cook County, and an appeal was taken by the same parties to the Supreme Court of Illinois. Among the assignments of error in that court were these: That Carter was not allowed to defend; that the judgment was entered against Christy without notice or process; that the inferior courts had no jurisdiction to enforce the lien on a vessel engaged in domestic commerce between the States; that the statute of Illinois violated the Constitution of the United States; and that the exclusive jurisdiction in the premises was in a court of the United States.

The statute under which the proceedings in this suit took place is c. 12 of the Revised Statutes of Illinois, entitled "Attachment of Water Craft," which went into effect July 1st, 1874. Rev. Stat. Ill. 1881, p. 159. The act, § 1, gives a lien on all water craft of above five tons burthen, "used or intended to be used in navigating the waters or canals of this State, or used in trade and commerce between ports and places within this State, or having their home port in this State. . . . Fifth. For all damages arising from injuries done to persons or property by such water craft, whether the same are aboard said vessel or not, where the same shall have occurred through the negligence or misconduct of the owner, agent, master, or employé thereon." The following other sections of the act are material:

Digitized by Google

"§ 4. The person claiming to have a lien under the p
visions of this act may file with the clerk of any court
record of competent jurisdiction, in the county where any su
water craft may be found a petition, setting forth the nat
of his claim, the amount due after allowing all payments a
just offsets, the name of the water craft, and the name a
residence of each owner known to the petitioner; and wh
any owner or his place of residence is not known to the p
tioner, he shall so state, and that he has made inquiry, and
unable to ascertain the same; which petition shall be verif
by affidavit of the petitioner or his agent or attorney. If
claim is upon an account or instrument in writing, a copy
the same shall be attached to the petition.

"§ 5. The petitioner, or his agent or attorney, shall a
file with such petition a bond, payable to the owner of
craft to be attached, or, if unknown, to the unknown own
thereof, in at least double the amount of the claim, with se
rity to be approved by the clerk, conditioned that the p
tioner shall prosecute his suit with effect, or, in case of fail
therein, will pay all costs and damages which the owner
other person interested in such water craft may sustain,
consequence of the wrongful suing out of such attachme
which bond may be sued by any owner or person interest
in the same manner, as if it had been given to such person
his proper name. Only such persons shall be required to j
in such suit as have a joint interest; others may allege breac
and have assessment of damages, as in other cases of suits
penal bonds.

"§ 6. Upon the filing of such petition and bond as af
said, the clerk shall issue a writ of attachment against
owners of such water craft, directed to the sheriff of
county, commanding him to attach such water craft, wh
writ shall be tested and returnable as other writs of atta
ment. Such owners may be designated by their repu
names, by surnames, and joint defendants by their separate
partnership names, or by such names, styles, or titles as t
are usually known. If the name of any owner is unkno
he may be designated as unknown owner.

Digitized by Google

"§ 7. The writ shall be substantially in the following form:

State of Illinois, } ss.
—— County, }

The People of the State of Illinois, to the Sheriff of —— County, Greeting:

Whereas —— (name of the petitioner) hath complained that owners of the —— (name of the vessel) are justly indebted to him in the [sum of] —— dollars (amount due), for which he claims a lien upon said vessel, and has given bond with security as required by law: We, therefore, command you that you attach the said —— (name of vessel), her tackle, apparel, and furniture, to satisfy such demand and costs, and all such demands as shall be exhibited against such vessel according to law, and having attached the same, you summon —— (here insert the names of owners of such vessel), owners of such vessel, to be and appear before the —— Court of —— at its next term, to be holden at the court-house in said county, on the —— day of ——, then and there to answer what may be objected against them, and the said —— (name of vessel). And have you then and there this writ, with a return thereon in what manner you have executed the same.

Witness: —— clerk of —— court, and the seal thereof, this —— day of ——, A.D. 18—. —— ——, *Clerk.*

"§ 8. The sheriff or other officer to whom such writ shall be directed shall forthwith execute the same by reading the same to such defendants, and attaching the vessel, her tackle, apparel and furniture, and shall keep the same until disposed of as hereinafter provided. Such sheriff or other officer shall also, on or before the return day in such writ, or at any time after the service thereof, upon the request of the petitioner, make a return to said court, stating therein particularly his doings in the premises, and shall make, subscribe and annex thereto a just and true inventory of all the property so attached.

"§ 9. Whenever any such writ shall be issued and served, no other attachment shall issue against the said water craft, unless the first attachment is discharged, or the vessel is bonded.

Digitized by Google

"§ 10. Upon return being made to such writ, unless the ves has been bonded, as hereinafter provided, the clerk shall imm diately cause notice to be given in the same manner as requir in other cases of attachment. The notice shall contain, addition to that required in other cases of attachment, a not to all persons to intervene for their interests on a day certa or that said claim will be heard *ex parte*.

"§ 11. Any person having a lien upon or any interest in t water craft attached may intervene to protect such intere by filing a petition as hereinbefore provided, entitled an int vening petition; and any person interested may be made defendant at the request of himself, or any party to the su and may defend any petition by filing an answer as here after provided, and giving security satisfactory to the court pay any costs arising from such defence; and upon the fili of any intervening petition, a summons, as hereinbefore p vided, shall issue; and if the same shall be returned not serv notice by publication may be given as aforesaid; and seve intervening petitioners may be united with each other, or t original, in one notice.

"§ 12. Any person intervening to enforce any lien or clai adverse to the owners of the craft attached shall, at the ti of filing his petition, file with the clerk a bond as in the c of the original attachment.

"§ 13. Intervening petitions may be filed at any time bef the vessel is bonded, as provided in section fifteen (15); or the same is not so bonded, before order for distribution of t proceeds of the sale of the craft. And the same proceedi shall thereupon be had as in the case of claims filed bef sale."

"§ 15. The owner, or his agent or attorney, or any oth person interested in such water craft, desiring the return the property attached, having first given notice to the p tioner, his agent or attorney, of his intention to bond the sa may, at any time before judgment, file with the clerk of t court in which the suit is pending, a bond to the parties havi previously filed petitions against such craft, in a penalty least double the aggregate of all sums alleged to be due t

Digitized by Google

several petitioners, with security to be approved by the clerk, conditioned that the obligors will pay all moneys adjudged to be due such claimants, with costs of suit."

"§ 17. Upon receiving a bond or deposit, as provided in either of the foregoing sections, it shall be the duty of the clerk to issue an order of restitution, directing the officer who attached the water craft to deliver the same to the person from whose possession the same was taken, and said water craft shall thenceforth be discharged from all the liens secured by bond or deposit, unless the court or judge thereof, upon motion, shall order the same again into custody on account of the insufficiency or insolvency of the surety."

"§ 21. If, upon the trial, judgment shall pass for the petitioner, and the water craft has been discharged from custody as herein provided, said judgment or decree shall be rendered against the principal and sureties in the bond: *Provided*, that in no case shall the judgment exceed the penalty of the bond, and the subsequent proceedings shall be the same as now provided by law in personal actions in the Courts of Record in this State. If the release has been upon deposit, the judgment shall be paid out of said deposit."

The Supreme Court of Illinois affirmed the judgment of the Appellate Court of the First District. 105 Ill. 462. To review the judgment of the Supreme Court, Johnson, Carter, and Christy brought a writ of error.

Mr. Henry W. Magee for plaintiffs in error.

The "Attachment of Water Craft" Act is invalid in attempting to *create* and *enforce a lien in rem* against a vessel engaged in domestic commerce upon the navigable waters of the United States of America, above twenty tons burthen, duly enrolled and licensed. Exclusive jurisdiction for that purpose is in the District Court of the United States. Sec. 2, Art. III, Constitution of the United States. Subdivis. 8 — Sec. 563, Title XIII, Revised Statutes of the United States — *The Hine* v. *Trevor*, 4 Wall. 555; *The Moses Taylor*, 4 Wall. 411; *The Belfast*, 7 Wall. 624; *The Eddy*, 5 Wall. 481; *The*

Digitized by Google

Lottawanna, 21 Wall. 558; *Weston* v. *Morse*, 40 Wis. 459; *re Josephine*, 39 N. Y. 22.

The Legislature had not the power to confer upon the C cuit Courts jurisdiction to enforce a lien on vessels duly rolled and licensed by the United States, by proceedings *rem*, according to the procedure of Admiralty Courts. *Wes* v. *Morse*, 40 Wis. 455; *Campbell* v. *Sherman*, 35 Wis. 1 *The John Richards*, Newberry, Adm. 73; *The Golden G* Newberry, Adm. 296; *Leon* v. *Galceran*, 11 Wall. 185; *Lottawanna*, 21 Wall. 567; *The Edith*, 94 U. S. 518; *Ferra Hasford*, 54 Barb. 200; *The Edith*, 5 Ben. 432.

The rendition of judgment against Christy without s issue, trial, hearing, presence, or representation by attorne otherwise, was a deprivation of property without due pro of law, and in this respect a violation of the Fifth Amendm to the Constitution. So was the denial to Carter, part ow of the vessel, of the right to interplead and to defend property.

The provisions of the Illinois statute amount to a regulat of commerce, inasmuch as they give to the ports of Illinois Admiralty proceeding under State law, enforceable in its co alone. It violates the provision of the Constitution that preference shall be given by any regulation of commerce the ports of one State over those of another," and the set principle that the Federal Courts have jurisdiction in Ad ralty of all cases of maritime liens.

Mr. Robert Rae for defendant in error submitted on brief.

Mr. Justice Blatchford, after stating the case, delive the opinion of the court.

It is assigned here for error (1) that the State Court had jurisdiction to enforce a lien *in rem* on a vessel above 20 t burthen, engaged in domestic commerce among the States, duly enrolled and licensed in conformity with Title 50 of Revised Statutes; (2) that the State statute is repugnant to Constitution of the United States, because it purports to g

Digitized by Google

to a State Court admiralty jurisdiction to enforce a maritime lien *in rem;* (3) that judgment was given against Christy without notice to him or due process of law; (4) that Carter, a part owner of the tug, was denied a hearing.

Under the decisions of this court in *The Plymouth*, 3 Wall. 20, and in *Ex parte Phœnix Ins. Co.*, 118 U. S. 610, at the present term, it must be held that the cause of action in this case was not a maritime tort of which a District Court of the United States, as a court of admiralty, would have jurisdiction; and that the remedy belonged wholly to a court of common law; the substance and consummation of the wrong having taken place on land, and not on navigable water, and the cause of action not having been complete on such water. This being so, no reason exists why the remedy for the wrong should not be pursued in the State Court, according to the statutory method prescribed by the law of the State, even though that law gives a lien on the vessel. The cases in which State statutes have been held void by this court, to the extent in which they authorized suits *in rem* against vessels, because they gave to the State Courts admiralty jurisdiction, were only cases where the causes of action were cognizable in the admiralty. Necessarily, no other cases could be embraced. *The Moses Taylor*, 4 Wall. 411; *The Hine* v. *Trevor*, 4 Wall. 555; *The Belfast*, 7 Wall. 624.

In the present case, the suit is a suit *in personam*. The petition states that the plaintiff "complains of Jacob Johnson," "and makes him defendant herein;" and that the plaintiff has demanded the amount of his damage from the defendant, but the latter refuses to pay it. The petition prays that the tug may be attached and the defendant be summoned. The writ of attachment recites that the plaintiff has complained that Johnson is indebted to it in $394.38, for which it claims a lien on the tug. The writ commands the sheriff to attach the tug and to summon Johnson to appear before the court on a day named. Attachment was made of "all the right, title, and interest" of Johnson in and to the tug, and at the same time the writ was served on him by being read to him. The releasing bond executed by Johnson and Christy recites the

Digitized by Google

action as being one for damages alleged to be due to the pl
tiff from Johnson. From the time of the issuing of the wri
restitution, on the same day the petition was filed, the tug
appears from the proceedings, the bond having taken her pl
The judgment was one *in personam* against Johnson
Christy, as required by § 21 of the statute, in a case where
attached vessel has been discharged from custody. That
tion also provides that the proceedings subsequent to the ju
ment "shall be the same as now provided by law in pers
actions in the Courts of record in this State."

So far, therefore, as this suit is concerned, the action, in
shape in which it comes before this court, is a suit *in person*
with an attachment as security, the attachment being b
on a lien given by the State statute, and a bond having b
by the act of the defendant, substituted for the thing attac

In *Taylor* v. *Carryl*, 20 How. 583, this court upheld
validity of the seizure of a vessel under a process of for
attachment issuing from a State Court of Pennsylvania
pursuance of a statute of that State, as against a subseq
attempt to seize her under process in admiralty. In the co
of the opinion of the court, delivered by Mr. Justice Ca
bell, it is said: "The process of foreign attachment has b
for a long time in use in Pennsylvania, and its operatio
well defined, by statute as well as judicial precedents. .
The habit of courts of common law has been to deal
ships as personal property, subject in the main, like other
sonal property, to municipal authority, and liable to thei
medial process of attachment and execution, and the title
them, or contracts and torts relating to them, are cogniz
in those courts."

The subsequent case of *Leon* v. *Galceran*, 11 Wall. 18
very much like the one now before us. There, by a statut
Louisiana, a mariner had a lien or privilege on his vessel
his wages, and he brought a suit *in personam* therefor i
court of the State, and had the vessel sequestered. She
released on a bond given by her owner, and by Leon as sur
for the return of the vessel on final judgment. Judgm
being rendered against the owner *in personam*, and the ve

Digitized by Google

not being returned, the mariner sued the surety, on the bond, in the same court, and had judgment for the amount fixed by the original judgment. On a writ of error from this court, sued out by Leon, it was urged for him, that, under the authority of *The Moses Taylor* and *The Hine* v. *Trevor*, the State Court had no jurisdiction to enforce the lien by a seizure before judgment. On the other side, it was urged that the suit was a common law remedy, within the clause in § 9 of the Judiciary Act of September 24th, 1789, 1 Stat. 77, (now embodied in § 711, subdivision 3, of the Revised Statutes,) which, after granting to the District Courts of the United States "exclusive original cognizance of all civil causes of admiralty and maritime jurisdiction," saves "to suitors, in all cases, the right of a common law remedy, where the common law is competent to give it." This court held, that the action *in personam* in the State Court was a proper one, because it was a common law remedy, which the common law was competent to give, although the State law gave a lien on the vessel in the case, similar to a lien under the maritime law, and it was made enforceable by a writ of sequestration in advance, to hold the vessel as a security to respond to a judgment, if recovered against her owner, as a defendant; that the suit was not a proceeding *in rem*, nor was the writ of sequestration; that the bond given on the release of the vessel became the substitute for her; that the common law is as competent as the admiralty to give a remedy in all cases where the suit is *in personam* against the owner of the property; and that these views were not inconsistent with any expressed in *The Moses Taylor*, in *The Hine* v. *Trevor*, or in *The Belfast*.

The case of *Pennywit* v. *Eaton*, 15 Wall. 382, is a similar one.

There being no lien on the tug, by the maritime law, for the injury on land inflicted in this case, the State could create such a lien therefor as it deemed expedient, and could enact reasonable rules for its enforcement, not amounting to a regulation of commerce. Liens under State statutes, enforceable by attachment, in suits *in personam*, are of every day occurrence, and may even extend to liens on vessels, when the pro-

Digitized by Google

ceedings to enforce them do not amount to admiralty
ceedings *in rem*, or otherwise conflict with the Constitutio
the United States. There is no more valid objection to
attachment proceeding to enforce the lien in a suit *in*
sonam, by holding the vessel by mesne process to be subje
to execution on the personal judgment when recovered, t
there is in subjecting her to seizure on the execution. I
are incidents of a common law remedy, which a court of c
mon law is competent to give. This disposes of the objec
that, the vessel being engaged in commerce among the Sta
and enrolled and licensed therefor, no lien on her could be
forced by attachment in the State Court. The proceedin
enforce the lien, in this case, was not such a regulation of c
merce among the States as to be invalid, because an interfere
with the exclusive authority of Congress to regulate such c
merce, any more than regulations by a State of the rate
wharfage for vessels, and of remedies to recover wharfage,
amounting to a duty of tonnage, are such an interfere
because the vessels are engaged in inter-State comme
Cannon v. *New Orleans*, 20 Wall. 577, 582; *Packet Co*
Catlettsburg, 105 U. S. 559; *Transportation Co.* v. *Park*
burg, 107 U. S. 691.

Nor is the act of Illinois, so far as this case is concer
obnoxious to the objection that it is a regulation of comm
which gives preference to the ports of Illinois over those
another State, within the inhibition of subdivision 6 of §
Article 1 of the Constitution of the United States. As
said in *Munn* v. *Illinois*, 94 U. S. 113, 135, "this provis
operates only as a limitation of the powers of Congress,
in no respect affects the States in the regulation of their
mestic affairs." See, also, *Morgan* v. *Louisiana*, 118 U
455, 467.

Whether proceedings under the Illinois statute, different fr
those had in this case, may or may not be obnoxious to so
of the objections raised, is a question which must be left to
determined when it properly arises.

As to the objection made by Christy to the judgm
against him, the Supreme Court of Illinois overruled it on

Digitized by Google

ground that, as the bond was given with the statute existing, the statute formed part of the bond, and the surety virtually consented that judgment might go against him on the bond, under § 21, if the plaintiff should be entitled to judgment against Johnson, citing *Whitehurst* v. *Coleen*, 53 Ill. 247, and *Hennies* v. *The People*, 70 Ill. 100. This was a correct ruling. *Beall* v. *New Mexico*, 16 Wall. 535; *Moore* v. *Huntington*, 17 Wall. 417, 422.

As to the objection made by Carter, that he was denied a hearing, the Supreme Court of Illinois overruled it on the ground that, on the giving of the release bond, the tug was discharged from the lien unless ordered again into custody, and the subsequent judgment could only be against Johnson and Christy, *in personam*. This was a sound view.

Judgment affirmed.

CALIFORNIA PAVING CO. v. SCHALICKE.

APPEAL FROM THE CIRCUIT COURT OF THE UNITED STATES FOR THE DISTRICT OF CALIFORNIA.

Submitted December 6, 1886. — Decided December 20, 1886.

Reissued letters-patent No. 4364, granted to John J. Schillinger, May 2d, 1871, for an improvement in concrete pavements, on the surrender of original letters-patent No. 105,559, granted to him July 19th, 1870, are not, in view of the disclaimer filed by the patentee, March 1st, 1875, infringed by the defendant's pavement in this case.

Bill in equity to restrain infringements of letters-patent. The case is stated in the opinion of the court.

Mr. M. A. Wheaton for appellant.

Mr. Manuel Eyre for appellee.

Mr. Justice Blatchford delivered the opinion of the court.

This is a suit in equity, brought by the California Artificial Stone Paving Company, a California corporation, against F. W. Schalicke, to recover for the infringement of reissued let-

Digitized by Google

ters-patent No. 4364, granted to John J. Schillinger, May 2
1871, for an improvement in concrete pavements, on the su
render of original letters-patent No. 105,559, granted to hi
July 19th, 1870. The specification and drawings of the
issued patent are as follows:

"Figure 1 represents a plan of my pavement. Figure 2
a vertical section of the same. Similar letters indicate cor
sponding parts.

Fig. 1.

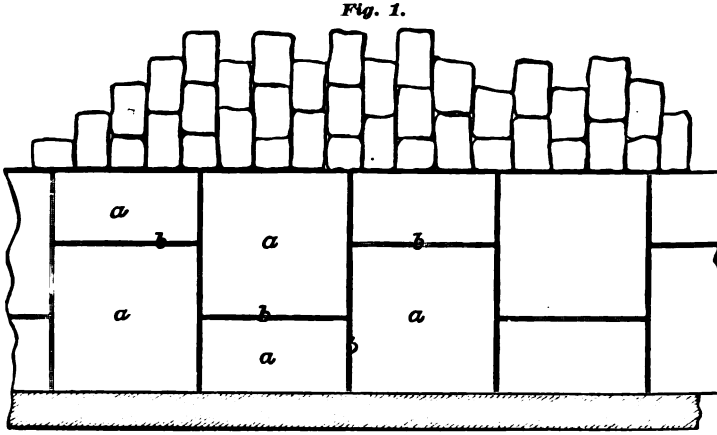

Fig. 2.

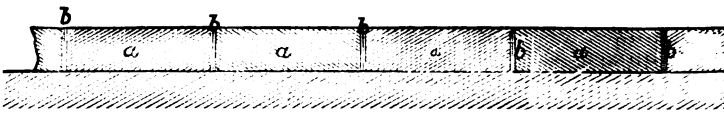

"This invention relates to a concrete pavement, which is l
in sections, so that each section can be taken up and rel
without disturbing the adjoining sections. With the joi
of this sectional concrete pavement are combined strips of t
paper, or equivalent material, arranged between the seve
blocks or sections in such a manner as to produce a suita
tight joint and yet allow the blocks to be raised separat
without affecting the blocks adjacent thereto.

"In carrying out my invention, I form the concrete by m
ing cement with sand and gravel, or other suitable material

Digitized by Google

form a plastic compound, using about the following proportions: One part, by measure, of cement, one part, by measure, of sand, and from three to six parts, by measure, of gravel, with sufficient water to render the mixture plastic; but I do not confine myself to any definite proportions or materials for making the concrete composition. While the mass is plastic, I lay or spread the same on the foundation or bed of the pavement, either in molds or between movable joists of the proper thickness, so as to form the edges of the concrete blocks, *a*, *a*, one block being formed after the other. When the first block has set I remove the joists or partitions between it and the block next to be formed, and then I form the second block, and so on, each succeeding block being formed after the adjacent blocks have set, [and, since the concrete in setting shrinks, the second block, when set, does not adhere to the first, and so on,] and, when the pavement is completed, each block can be taken up independent of the adjoining blocks. Between the joints of the adjacent blocks are placed strips, *b*, of tar-paper, or other suitable material, in the following manner: After completing one block, *a*, I place the tar-paper, *b*, along the edge where the next block is to be formed, and I put the plastic composition for such next block up against the tar-paper joint, and proceed with the formation of the new block until it is completed. In this manner I proceed until the pavement is completed, interposing tar-paper between the several joints, as described. The paper constitutes a tight water-proof joint, but it allows the several blocks to heave separately, from the effects of frost, or to be raised or removed separately, whenever occasion may arise, without injury to the adjacent blocks. The paper, when placed against the block first formed, does not adhere thereto, and, therefore, the joints are always free between the several blocks, although the paper may adhere to the edges of the block or blocks formed, after the same has been set up in its place between the joints. [In such cases, however, where cheapness is an object, the tar-paper may be omitted, and the blocks formed without interposing anything between their joints, as previously described. In this latter case, the joints soon fill up with sand or dust, and the pave-

Digitized by Google

ment is rendered sufficiently tight for many purposes, while the blocks are detached from each other, and can be taken up and relaid, each independent of the adjoining blocks.]

"What I claim as new, and desire to secure by letters-patent, is—

"1. A concrete pavement laid in detached blocks or sections, substantially in the manner shown and described.

"2. The arrangement of tar-paper, or its equivalent, between adjoining blocks of concrete, substantially as, and for the purpose, set forth."

On the 1st of March, 1875, Schillinger filed in the Patent Office a disclaimer, in which he disclaimed the matter above enclosed in brackets, and stated, also, that he disclaimed "the forming of blocks from plastic material without interposing anything between their joints while in the process of formation."

The only defence set up in the answer is non-infringement. After a hearing, on proofs, the Circuit Court dismissed the bill, on the ground that the defendant's pavement did not infringe either one of the two claims of the patent.

This patent has been construed by several Circuit Courts since the disclaimer was filed. In *Schillinger* v. *Gunther*, 14 Blatchford, 152, in the Southern District of New York, in February, 1877, the defendant's pavement had a bottom layer of coarse cement, on which was laid a course of fine cement, divided into blocks by a trowel run through that course while plastic. It possessed the advantage of Schillinger's invention, because any blocks in the upper course could be taken up without injury to the adjoining blocks. Concrete pavement having been before laid in sections, without being divided into blocks, the invention of Schillinger was held to consist in dividing the pavement into blocks, so that one block could be removed and repaired without injury to the rest of the pavement, the division being effected by either a permanent or a temporary interposition of something between the blocks. It was held that the effect of the disclaimer was to leave the patent to be one for a pavement wherein the blocks are formed by interposing some separating material between the joints;

Digitized by Google

that to limit the patent to the permanent interposition of a material equivalent to tar-paper, would limit the actual invention; that using the trowel accomplished the substantial results of the invention in substantially the same way devised by Schillinger; that the only difference in result was that the defendant's method left an open joint; that having a tight joint was not a material part of Schillinger's invention; and that the mode of operation involved in using the trowel was within the first claim of the reissue as it stood after the disclaimer.

In the same suit, 17 Blatchford, 66, in August, 1879, it was held, that the disclaimer took out of the first claim of the reissue only so much thereof as claimed a concrete pavement made of the plastic material laid in detached blocks, without interposing anything between the joints in the process of formation, leaving the claim to be one for such a pavement laid in detached blocks, when free joints are made between the blocks, by interposing tar-paper or its equivalent.

In *California Artificial Stone Paving Co.* v. *Molitor*, 7 Sawyer, 190, in the District of California, in May, 1881, the defendant's pavement was made by cutting a lower course into sections with a trowel, to a greater or less depth, according to the character of the material, making a joint, and doing the same with an upper course, the upper joint being directly over the lower joint. Into the open joint, in each case, was loosely put some of the partially set material from the top of the laid course, answering the purpose of tar-paper. A blunt and rounded joint-marker, which was said to be $\frac{1}{16}$ or $\frac{1}{8}$ of an inch in depth, was then run over the line of the joints, marking off the block. The pavement was weaker along the line of the joint than in any other place. This was held to be an infringement.

In *California Artificial Stone Paving Co.* v. *Freeborn*, 8 Sawyer, 443, in the District of California, in January, 1883, it was held, that, where nothing was interposed in the joint between a newly laid block and one laid before, but, after the material in the newly laid block had partially set, a blunt and rounded joint-marker, $\frac{1}{16}$ of an inch in depth, was run along

Digitized by Google

the line between the newly laid block and the one laid befo
there was no infringement.

In *Schillinger* v. *Greenway Brewing Co.*, 21 Blatchford, 3
in the Northern District of New York, in July, 1883, it w
held, that the 2d claim of the reissue was infringed by a c
crete pavement which had an open cut made by a trowel
tirely through two courses of material, the line of cut in t
upper course being directly over the line of cut in the low
course; and that the interposition of the trowel, though te
porary, was an equivalent for the tar-paper, even though t
joint was left open after the trowel was removed, and was
made tight.

In *Kuhl* v. *Mueller*, 21 Fed. Rep. 510, in the Southern D
trict of Ohio, in June, 1884, it was held, that the use of a
marker was an infringement which made a cut or depress
having the effect to cause the pavement to break by upheav
or cracking, from any cause, along the line of the cut or
pression; and that, as the blocks from the pavements laid
the defendant showed clear, distinct, and complete lines
division, there was infringement, whether those lines w
produced by a trowel or by a marker.

The evidence in the present case shows that the defenda
during the process of making his pavement, marked off
surface into squares. But the question is whether he, to a
extent, divided it into blocks, so that the line of cracking
controlled, and induced to follow the joints of the divisio
rather than the body of the block, and so that a block co
be taken out, and a new one put in its place, without distu
ing or injuring an adjoining block. The specification make
essential that the pavement shall be so laid in sections "t
each section can be taken up and relaid without disturbing
adjoining sections." Again, it says, that the joint betw
the blocks "allows the several blocks to heave separately, fr
the effects of frost, or to be raised or removed separat
whenever occasion may arise, without injury to the adjac
blocks." This is essential; and, in all the cases where infrin
ment has been held to have been established, there have b
blocks substantially separate, made so by the permanent

Digitized by Google

temporary interposition of a separating medium or a cutting instrument, so that one block could upheave or be removed without disturbing the adjoining blocks. The patentee, in the disclaimer, expressly disclaimed "the forming of blocks from plastic material without interposing anything between their joints while in the process of formation."

It appears that the defendant laid his pavement in strips from the curb of the sidewalk inward to the fence, in one mass, and then marked the strip crosswise with a blunt marker, which is made an exhibit, to the depth of about one sixteenth of an inch. But it is not shown that this produced any such division into blocks as the patent speaks of, even in degree. There were no blocks produced, and, of course, there was nothing interposed between blocks. The mass underneath was solid, in both layers, laterally. So far as appears, what the defendant did was just what the patentee disclaimed. The marking was only for ornamentation, and produced no free joints between blocks, and the evidence as to the condition of the defendant's pavements after they were laid shows that they did not have the characteristic features above mentioned as belonging to the patented pavement.

Without affirming or disaffirming the constructions given to the patent in the particular cases cited from the Circuit Courts, we are of opinion that, under any construction which it is possible to give to the claims, the defendant in this case has not infringed.

Decree affirmed.

UNITED STATES v. RAUSCHER.

CERTIFICATE OF DIVISION OF OPINION FROM THE CIRCUIT COURT OF THE UNITED STATES FOR THE SOUTHERN DISTRICT OF NEW YORK.

Submitted March 2, 1886. — Decided December 6, 1886.

Apart from the provisions of treaties on the subject, there exists no well-defined obligation on one independent nation to deliver to another fugitives from its justice; and though such delivery has often been made,

Digitized by Google

it was upon the principle of comity. The right to demand it has not b recognized as among the duties of one government to another which upon established principles of international law.

In any question of this kind which can arise between this country and a eign nation, the extradition must be negotiated through the Federal ernment, and not by that of a State, though the demand may be f crime committed against the law of that State.

With most of the civilized nations of the world with which the United St have much intercourse, this matter is regulated by treaties, and the q tion now decided arises under the treaty of 1842 between Great Bri and the United States, commonly called the Ashburton Treaty.

The defendant in this case being charged with murder on board an Am can vessel on the high seas, fled to England, and was demanded of government of that country, and surrendered on this charge. The Cir Court of the United States for the Southern District of New Yor which he was tried, did not proceed against him for murder, but f minor offence not included in the treaty of extradition; and the judge that court certified to this court for its judgment the question whe this could be done. *Held:*

(1) That a treaty to which the United States is a party is a law of land, of which all courts, state and national, are to take judicial no and by the provisions of which they are to be governed, so far as are capable of judicial enforcement.

(2) That, on a sound construction of the treaty under which the def ant was delivered to this country, and under the proceedings by wh this was done, and acts of Congress on that subject, Rev. Stat. §§ 5 5275, he cannot lawfully be tried for any other offence than murder

(3) The treaty, the acts of Congress, and the proceedings by which was extradited, clothe him with the right to exemption from trial any other offence, until he has had an opportunity to return to country from which he was taken for the purpose alone of trial for offence specified in the demand for his surrender. The national ho also requires that good faith shall be kept with the country which rendered him.

(4) The circumstance that the party was convicted of inflicting cruel unusual punishment on the same evidence which was produced be the committing magistrate in England, in the extradition proceedi for murder, does not change the principle.

The case is stated in the opinion of the court.

Mr. Solicitor General Goode for the United States.

Mr. A. J. Dittenhoefer for Rauscher submitted on his br

MR. JUSTICE MILLER delivered the opinion of the court.

Digitized by Google

This case comes before us on a certificate of division of opinion between the judges holding the Circuit Court of the United States for the Southern District of New York, arising after verdict of guilty, and before judgment, on a motion in arrest of judgment.

The prisoner, William Rauscher, was indicted by a grand jury, for that, on the 9th day of October, 1884, on the high seas, out of the jurisdiction of any particular state of the United States, and within the admiralty and maritime jurisdiction thereof, he, the said William Rauscher, being then and there second mate of the ship J. F. Chapman, unlawfully made an assault upon Janssen, one of the crew of the vessel of which he was an officer, and unlawfully inflicted upon said Janssen cruel and unusual punishment. This indictment was found under § 5347 of the Revised Statutes of the United States.

The statement of the division of opinion between the judges is in the following language:

"This cause coming on to be heard at this term, before judgment upon the verdict, on a motion in arrest of judgment, and also on a motion for a new trial before the two judges above mentioned, at such hearing the following questions occurred:

"First. The prisoner having been extradited upon a charge of murder on the high seas of one Janssen, under § 5339 Rev. Stat., had the Circuit Court of the Southern District of New York jurisdiction to put him to trial upon an indictment under § 5347 Rev. Stat., charging him with cruel and unusual punishment of the same man, he being one of the crew of an American vessel of which the defendant was an officer, and such punishment consisting of the identical acts proved in the extradition proceedings?

"Second. Did or not the prisoner, under the extradition treaty with Great Britain, having been surrendered upon a charge of murder, acquire a right to be exempt from prosecution upon the charge set forth in the indictment, without being first afforded an opportunity to return to Great Britain?

"Third. Was it error on the part of the trial judge to overrule a plea to the jurisdiction of the court to try the indictment

Digitized by Google

under § 5347 of the United States Revised Statutes, chargi the accused with cruel and unusual punishment of one Janss one of the crew of a vessel of which accused was an officer having been established upon said plea that the accused v extradited under the extradition treaty with Great Brita upon the charge of murder of the same Janssen, under § 53 of the United States Revised Statutes?

"Fourth. Was it error on the part of the trial judge refuse to direct a verdict of acquittal, after it had been prov that the accused was extradited under the extradition tre with Great Britain, upon the charge of murder, it also appe ing that in the proceedings preliminary to the warrant extradition the same act was investigated, and the same w nesses examined, as at the trial?

"In respect to each of which questions the judges afores were divided in opinion.

"Wherefore, at the same term, at the request of the Uni States attorney, they have caused the points above stated be certified under the seal of this court, together with a co of the indictment and an abstract of the record, to the Supre Court of the United States for final decision according to la

"Wm. J. Wallace.
"Chas. L. Benedict."

The treaty with Great Britain, under which the defenda was surrendered by that government to ours upon a charge murder, is that of August 9, 1842, styled "A treaty to set and define the boundaries between the territories of t United States and the possessions of Her Britannic Maje in North America; for the final suppression of the Afric slave trade; and for the giving up of criminals, fugitive fr justice, in certain cases." 8 Stat. 576.

With the exception of this caption, the tenth article of t treaty contains all that relates to the subject of extradition criminals. That article is here copied, as follows:

"It is agreed that the United States and Her Britan Majesty shall, upon mutual requisitions by them, or th ministers, officers, or authorities, respectively made, deliver

Digitized by Google

to justice all persons who, being charged with the crime of murder, or assault with intent to commit murder, or piracy, or arson, or robbery, or forgery, or the utterance of forged paper, committed within the jurisdiction of either, shall seek an asylum, or shall be found, within the territories of the other: provided that this shall only be done upon such evidence of criminality as, according to the laws of the place where the fugitive or person so charged shall be found, would justify his apprehension and commitment for trial, if the crime or offence had there been committed; and the respective judges and other magistrates of the two Governments shall have power, jurisdiction, and authority, upon complaint made under oath, to issue a warrant for the apprehension of the fugitive or person so charged, that he may be brought before such judges or other magistrates, respectively, to the end that the evidence of criminality may be heard and considered; and if, on such hearing, the evidence be deemed sufficient to sustain the charge, it shall be the duty of the examining judge or magistrate to certify the same to the proper Executive authority, that a warrant may issue for the surrender of such fugitive."

Not only has the general subject of the extradition of persons charged with crime in one country, who have fled to and sought refuge in another, been matter of much consideration of late years by the executive departments and statesmen of the governments of the civilized portion of the world, by various publicists and writers on international law, and by specialists on that subject, as well as by the courts and judicial tribunals of different countries, but the precise questions arising under this treaty, as presented by the certificate of the judges in this case, have recently been very much discussed in this country and in Great Britain.

It is only in modern times that the nations of the earth have imposed upon themselves the obligation of delivering up these fugitives from justice to the States where their crimes were committed, for trial and punishment. This has been done generally by treaties made by one independent government with another. Prior to these treaties, and apart from them,

Digitized by Google

it may be stated as the general result of the writers upon ternational law, that there was no well-defined obligation one country to deliver up such fugitives to another, and thou such delivery was often made, it was upon the principle comity, and within the discretion of the government wh action was invoked; and it has never been recognized among those obligations of one government towards anot which rest upon established principles of international law.

Whether in the United States, in the absence of any tre on the subject with a foreign nation from whose justice a fu tive may be found in one of the States, and in the absence any act of Congress upon the subject, a *State* can, through own judiciary or executive, surrender him for trial to such eign nation, is a question which has been under considerat by the courts of this country without any very conclus result.

In the case of *Daniel Washburn*, 4 Johns. Ch. 106; *S.C.* 8 A Dec. 548, who was arrested on a charge of theft committed Canada, and brought before Chancellor Kent upon a writ *habeas corpus*, that distinguished jurist held that, irrespective all treaties, it was the duty of a State to surrender fugitive cr inals. The doctrine of this obligation was presented with gr ability by that learned jurist; but shortly afterward Chief J tice Tilghman, in the case of *Short* v. *Deacon*, 10 S. & R. 125 the Supreme Court of Pennsylvania, held the contrary opinion that the delivery up of a fugitive was an affair of the exe tive branch of the national government, to which the dem of the foreign power must be addressed; that judges co not legally deliver up, nor could they command the execu to do so; and that no magistrate in Pennsylvania had right to cause a person to be arrested in order to afford President of the United States an opportunity to deliver up, because the President had already declared he would do so.

In the case of *Holmes* v. *Jennison*, 14 Pet. 540, on a wri error to the Supreme Court of Vermont, it appears that ap cation had been made to the President for the extradition Holmes, a naturalized citizen of the United States, who

Digitized by Google

charged with having committed murder in Lower Canada. There being then no extradition treaty between the two governments, the President declined to act, through an alleged want of power. Holmes having been arrested under authority from Governor Jennison, of Vermont, obtained a writ of *habeas corpus* from the Supreme Court of that State, and the sheriff returned that he was detained under an order of the governor, which commanded the sheriff to deliver him up to the authorities of Lower Canada, and the Supreme Court of the State held the return sufficient. On the writ of error from the Supreme Court of the United States two questions were presented, first, whether a writ of error would lie in such case from that court to the Supreme Court of the State; and, second, whether the judgment of the latter court was right. The eight judges who heard the case in this court were equally divided in opinion on the first of these questions, and therefore no authoritative decision of the principal question could be made. A very able and learned opinion in favor of the appellate jurisdiction of the Supreme Court of the United States, and against the right attempted to be exercised by the governor of Vermont, was delivered by Chief Justice Taney, with whom concurred Justices Story, McLean, and Wayne. Justices Thompson, Barbour, and Catron delivered separate opinions, denying the power of the Supreme Court of the United States to revise the judgment of the Supreme Court of Vermont. These latter, with whom concurred Justice Baldwin, did not express any clear opinion upon the power of the authorities of the State of Vermont, either executive or judicial, to deliver Holmes to the government of Canada; but, upon return of the case to the Supreme Court of that State, it seems that that court was satisfied by the arguments of the Chief Justice and those who concurred with him of the error of its position, and Holmes was discharged. In the final disposition of the case the court uses the following language:

"I am authorized by my brethren," says the Chief Justice, "to say, that, on an examination of this case, as decided by the Supreme Court of the the United States, they think, if the return had been as it now is, a majority of that court would have

Digitized by Google

decided that Holmes was entitled to his discharge, and t
the opinion of a majority of the Supreme Court of the Un
States was also adverse to the exercise of the power in q
tion by any of the separate States of the Union. The ju
ment of the court therefore is, that Holmes be discharged f
his imprisonment." *Ex parte Holmes*, 12 Vt. 631.

The Court of Appeals of New York, in the case of *The* *
ple, &c. v. *Curtis*, 50 N. Y. 321, also decided that an ac
the Legislature of that State authorizing the rendition to
eign States of fugitives from justice was in conflict with
Constitution of the United States. This was in 1872.

The question has not since arisen so as to be decided by
court, but there can be little doubt of the soundness of
opinion of Chief Justice Taney, that the power exercised
the governor of Vermont is a part of the foreign interco
of this country, which has undoubtedly been conferred u
the Federal government; and that it is clearly included in
treaty making power and the corresponding power of appo
ing and receiving ambassadors and other public minis
There is no necessity for the states to enter upon the relat
with foreign nations which are necessarily implied in
extradition of fugitives from justice found within the limit
the state, as there is none why they should in their own n
make demand upon foreign nations for the surrender of s
fugitives.

At this time of day, and after the repeated examinat
which have been made by this court into the powers of
Federal government to deal with all such international quest
exclusively, it can hardly be admitted that, even in the abs
of treaties or acts of Congress on the subject, the extradi
of a fugitive from justice can become the subject of negotia
between a state of this Union and a foreign government.

Fortunately, this question, with others which might aris
the absence of treaties or acts of Congress on the subjec
now of very little importance, since, with nearly all the nat
of the world with whom our relations are such that fugit
from justice may be found within their dominions or wi
ours, we have treaties which govern the rights and conduc

Digitized by Google

the parties in such cases. These treaties are also supplemented by acts of Congress, and both are in their nature exclusive.

The case we have under consideration arises under one of these treaties made between the United States and Great Britain, the country with which, on account of our intimate relations, the cases requiring extradition are likely to be most numerous. This treaty of 1842 is supplemented by the acts of Congress of August 12, 1848, 9 Stat. 302, and March 3, 1869, 15 Stat. 337, the provisions of which are embodied in §§ 5270, 5272, and 5275 of the Revised Statutes, under Title LXVI, Extradition.

The treaty itself, in reference to the very matter suggested in the questions certified by the judges of the Circuit Court, has been made the subject of diplomatic negotiation between the Executive Department of this country and the government of Great Britain in the cases of Winslow and Lawrence. Winslow, who was charged with forgery in the United States, had taken refuge in England, and, on demand being made for his extradition, the Foreign Office of that country required a preliminary pledge from our government that it would not try him for any other offence than the forgery for which he was demanded. To this Mr. Fish, the Secretary of State, did not accede, and was informed that the reason of the demand on the part of the British government was that one Lawrence, not long previously extradited under the same treaty, had been prosecuted in the courts of this country for a different offence from that for which he had been demanded from Great Britain, and for the trial of which he was delivered up by that government. Mr. Fish defended the right of the government or state in which the offence was committed to try a person extradited under this treaty for any other criminal offence, as well as for the one for which the extradition had been demanded; while Lord Derby, at the head of the Foreign Office in England, construed the treaty as requiring the government which had demanded the extradition of an offender against its laws for a prescribed offence, mentioned in the treaty and in the demand for his extradition, to try him for that offence and for no other. The correspondence is an able one upon both sides,

Digitized by Google

and presents the question which we are now required to decide, as to the construction of the treaty and the effect of the acts of Congress already cited, and of a statute of Great Britain of 1870 on the same subject. The negotiations between the two governments, however, on that subject were inconclusive in any other sense than that Winslow was not delivered up and Lawrence was never actually brought to judgment for any other offence than that for which his extradition was demanded.

The question was also discussed in the House of Lords, and Lord Derby stated and defended his views of the construction of the treaty with marked ability, while he conceded that the act of Parliament on that subject, which declared that the person extradited could be tried for no other offence than that for which he had been demanded, had no obligatory force upon the United States as one of the parties to the treaty. Foreign Relations of the United States, 1876–7, pp. 204–307.

The subject was also very fully discussed by Mr. William Beach Lawrence, a very learned authority on matters of international law living in this country, in several published articles. Albany Law Journal, vol. 14, p. 85; vol. 15, p. 224; vol. 16, p. 361. In these the author, with his usual ability, maintains the proposition, that a person delivered up under this treaty on a demand charging him with a specific offence, mentioned in it, can only be tried by the country to which he is delivered for that specific offence, and is entitled, unless found guilty of that, to be restored in safety to the country of his asylum at the time of his extradition.

A very able article arising out of the same public discussion at that time, to wit, 1876, is found in the American Law Review, said to have been written by Judge Lowell, of the United States Court at Boston, in which, after an examination of the authorities upon the general rule, independent of treaties, as found in the continental writers on international law, he says, that rule is, that the person whose extradition has been granted, cannot be prosecuted and tried except for the crime for which his extradition has been obtained; and, entering upon the question of the construction of the treaty of 1842, he gives to it the same effect in regard to that matter. 10 Am. Law Review, 1875–6, p. 617.

Digitized by Google

Mr. David Dudley Field, in his draft of an outline for an international code, published about the same time, adopts the same principle. Field's International Code, § 237, p. 122. It is understood that the rule which he lays down represents as well what he understands to be existing law, as also what he supposes it should be.

A very learned and careful work, published in this country by Mr. Spear, in 1879, and a second edition in 1884, after considering all the correspondence between our government and Great Britain upon the subject, the debate in the House of Lords, the articles of Mr. Lawrence and Judge Lowell, as well as the treatise of Mr. Clarke, an English writer, with a very exhaustive examination of all the decisions in this country relating to this matter, arrives at the same conclusion. This examination by Mr. Spear is so full and careful, that it leaves nothing to be desired in the way of presentation of authorities.

The only English work on the subject of extradition we have been able to find which discusses this subject is a small manual by Edward Clarke of Lincoln's Inn, published in 1867. He adopts the same view of the construction of this treaty and of the general principles of international law upon the subject which we have just indicated.

Turning to seek in judicial decisions for authority upon the subject, as might be anticipated we meet with nothing in the English courts of much value, for the reason that treaties made by the Crown of Great Britain with other nations are not in those courts considered as part of the law of the land, but the rights and the duties growing out of those treaties are looked upon in that country as matters confided wholly for their execution and enforcement to the executive branch of the government. Speaking of the Ashburton treaty of 1842, which we are now construing, Mr. Clarke says, that, "in England the common law being held not to permit the surrender of a criminal, this provision could not come into effect without an Act of Parliament, but in the United States a treaty is as binding as an Act of Congress." Clarke on Extradition, 38.

This difference between the judicial powers of the courts of Great Britain and of this country in regard to treaties is thus

Digitized by Google

alluded to by Chief Justice Marshall in the Supreme Cou
the United States:

"A treaty is in its nature a contract between two nati
not a legislative act. It does not generally effect, of itself
object to be accomplished, especially so far as its operatio
infra-territorial; but is carried into execution by the sover
power of the respective parties to the instrument. In
United States a different principle is established. Our
stitution declares a treaty to be the law of the land.
consequently, to be regarded in courts of justice as equiva
to an act of the legislature, whenever it operates of itself
out the aid of any legislative provision. But when the t
of the stipulation import a contract, when either of the pa
engages to perform a particular act, the treaty addresses
to the political, not the judicial department; and the le
ture must execute the contract before it can become a rul
the court." *Foster* v. *Neilson*, 2 Pet. 253, 314.

This whole subject is fully considered in the *Head M
Cases*, 112 U. S. 580, in which the effect of a treaty as a
of the law of the land, as distinguished from its aspect
mere contract between independent nations, is expressed i
following language:

"A treaty is primarily a compact between indepen
nations. It depends for the enforcement of its provision
the interest and the honor of the governments which are
ties to it. If these fail, its infraction becomes the subje
international negotiations and reclamations, so far as
injured party chooses to seek redress, which may in the
be enforced by actual war. It is obvious that with all thi
judicial courts have nothing to do and can give no re
But a treaty may also contain provisions which confer ce
rights upon the citizens or subjects of one of the nations
ing in the territorial limits of the other, which partake o
nature of municipal law, and which are capable of enforce
as between private parties in the courts of the country.
illustration of this character is found in treaties which
late the mutual rights of citizens and subjects of the con
ing nations in regard to rights of property by desce

Digitized by Google

inheritance, when the individuals concerned are aliens. The Constitution of the United States places such provisions as these in the same category as other laws of Congress, by its declaration that 'this Constitution and the laws made in pursuance thereof, and all treaties made or which shall be made under authority of the United States, shall be the supreme law of the land.' A treaty, then, is a law of the land, as an act of Congress is, whenever its provisions prescribe a rule by which the rights of the private citizen or subject may be determined. And when such rights are of a nature to be enforced in a court of justice, that court resorts to the treaty for a rule of decision for the case before it as it would to a statute." pp. 598–9. See also *Chew Heong* v. *United States*, 112 U. S. 536, 540, 565.

The treaty of 1842 being, therefore, the supreme law of the land, which the courts are bound to take judicial notice of, and to enforce in any appropriate proceeding the rights of persons growing out of that treaty, we proceed to inquire, in the first place, so far as pertinent to the questions certified by the circuit judges, into the true construction of the treaty. We have already seen that, according to the doctrine of publicists and writers on international law, the country receiving the offender against its laws from another country had no right to proceed against him for any other offence than that for which he had been delivered up. This is a principle which commends itself as an appropriate adjunct to the discretionary exercise of the power of rendition, because it can hardly be supposed that a government which was under no treaty obligation nor any absolute obligation of public duty to seize a person who had found an asylum within its bosom and turn him over to another country for trial, would be willing to do this, unless a case was made of some specific offence of a character which justified the government in depriving the party of his asylum. It is unreasonable that the country of the asylum should be expected to deliver up such person to be dealt with by the demanding government without any limitation, implied or otherwise, upon its prosecution of the party. In exercising its

Digitized by Google

discretion, it might be very willing to deliver up offenders against such laws as were essential to the protection of life, liberty, and person, while it would not be willing to do this on account of minor misdemeanors or of a certain class of political offences in which it would have no interest or sympathy. Accordingly, it has been the policy of all governments to grant an asylum to persons who have fled from their homes on account of political disturbances, and who might be there amenable to laws framed with regard to such subjects, and to the personal allegiance of the party. In many of the treaties of extradition between the civilized nations of the world, there is an express exclusion of the right to demand the extradition of offenders against such laws, and in none of them is this class of offences mentioned as being the foundation of extradition proceedings. Indeed, the enumeration of offences in most of these treaties, and especially in the treaty now under consideration, is so specific, and marked by such a clear line in regard to the magnitude and importance of those offences, that it is impossible to give any other interpretation to it than that of the exclusion of the right of extradition for any others.

It is, therefore, very clear that this treaty did not intend to depart in this respect from the recognized public law which had prevailed in the absence of treaties, and that it was not intended that this treaty should be used for any other purpose than to secure the trial of the person extradited for one of the offences enumerated in the treaty. This is not only apparent from the general principle that the specific enumeration of certain matters and things implies the exclusion of all others, but the entire face of the treaty, including the processes by which it is to be carried into effect, confirms this view of the subject. It is unreasonable to suppose that any demand for rendition framed upon a general representation to the government of the asylum, (if we may use such an expression,) that the party for whom the demand was made was guilty of some violation of the laws of the country which demanded him, without specifying any particular offence with which he was charged, and even without specifying an offence mentioned in the treaty, would receive any serious attention; and yet such

Digitized by Google

is the effect of the construction that the party is properly liable to trial for any other offence than that for which he was demanded, and which is described in the treaty. There would, under that view of the subject, seem to be no need of a description of a specific offence in making the demand. But, so far from this being admissible, the treaty not only provides that the party shall be charged with one of the crimes mentioned, to wit, murder, assault with intent to commit murder, piracy, arson, robbery, forgery, or the utterance of forged paper, but that evidence shall be produced to the judge or magistrate of the country of which such demand is made, of the commission of such an offence, and that this evidence shall be such as according to the law of that country would justify the apprehension and commitment for trial of the person so charged. If the proceedings under which the party is arrested in a country where he is peaceably and quietly living, and to the protection of whose laws he is entitled, are to have no influence in limiting the prosecution in the country where the offence is charged to have been committed, there is very little use for this particularity in charging a specific offence, requiring that offence to be one mentioned in the treaty, as well as sufficient evidence of the party's guilt to put him upon trial for it. Nor can it be said that, in the exercise of such a delicate power under a treaty so well guarded in every particular, its provisions are obligatory alone on the State which makes the surrender of the fugitive, and that that fugitive passes into the hands of the country which charges him with the offence, free from all the positive requirements and just implications of the treaty under which the transfer of his person takes place. A moment before he is under the protection of a government which has afforded him an asylum from which he can only be taken under a very limited form of procedure, and a moment after he is found in the possession of another sovereignty by virtue of that proceeding, but divested of all the rights which he had the moment before, and of all the rights which the law governing that proceeding was intended to secure.

If upon the face of this treaty it could be seen that its sole

Digitized by Google

object was to secure the transfer of an individual from t
jurisdiction of one sovereignty to that of another, the arg
ment might be sound; but as this right of transfer, the rig
to demand it, the obligation to grant it, the proceedings unc
which it takes place, all show that it is for a limited and
fined purpose that the transfer is made, it is impossible to c
ceive of the exercise of jurisdiction in such a case for any oth
purpose than that mentioned in the treaty, and ascertained
the proceedings under which the party is extradited, witho
an implication of fraud upon the rights of the party extradit
and of bad faith to the country which permitted his extra
tion. No such view of solemn public treaties between t
great nations of the earth can be sustained by a tribunal cal
upon to give judicial construction to them.

The opposite view has been attempted to be maintained
this country upon the ground that there is no express lim
tion in the treaty of the right of the country in which
offence was committed to try the person for the crime alc
for which he was extradited, and that once being within
jurisdiction of that country, no matter by what contrivance
fraud or by what pretence of establishing a charge provic
for by the extradition treaty he may have been brought wi
in the jurisdiction, he is, when here, liable to be tried for a
offence against the laws as though arrested here origina
This proposition of the absence of express restriction in
treaty of the right to try him for other offences than that
which he was extradited, is met by the manifest scope and
ject of the treaty itself. The caption of the treaty, alrea
quoted, declaring that its purpose is to settle the boundary l
between the two governments; to provide for the final s
pression of the African slave trade; adds, "and for the giv
up of criminals, fugitive from justice, *in certain cases*." T
treaty, then, requires, as we have already said, that there sh
be given up, upon requisitions respectively made by the t
governments, all persons charged with any of the seven crim
enumerated, and the provisions giving a party an examinati
before a proper tribunal, in which, before he shall be deliver
up on this demand, it must be shown that the offence for whi

Digitized by Google

he is demanded is one of those enumerated, and that the proof is sufficient to satisfy the court or magistrate before whom this examination takes place that he is guilty, and such as the law of the State of the asylum requires to establish such guilt, leave no reason to doubt that the fair purpose of the treaty is, that the person shall be delivered up to be tried for that offence and for no other.

If there should remain any doubt upon this construction of the treaty itself, the language of two acts of Congress, heretofore cited, incorporated in the Revised Statutes, must set this question at rest. It is there declared, Rev. Stat. § 5272, the two preceding sections having provided for a demand upon this country and for the inquiry into the guilt of the party, that "it shall be lawful for the Secretary of State, under his hand and seal of office, to order the person so committed to be delivered to such person or persons as shall be authorized, in the name and on behalf of such foreign government, *to be tried for the crime of which such person shall be so accused*, and such person shall be delivered up accordingly."

For the protection of persons brought into this country by extradition proceedings from a foreign country, § 5275 of the Revised Statutes provides:

"Whenever any person is delivered by any foreign government to an agent of the United States, for the purpose of being brought within the United States and tried for any crime of which he is duly accused, the President shall have power to take all necessary measures for the transportation and safe keeping of such accused person, and for his security against lawless violence, until the final conclusion of his trial for the crimes or offences specified in the warrant of extradition, and until his final discharge from custody or imprisonment for or on account of such crimes or offences, and for a reasonable time thereafter, and may employ such portion of the land or naval forces of the United States, or of the militia thereof, as may be necessary for the safe keeping and protection of the accused."

The obvious meaning of these two statutes, which have reference to all treaties of extradition made by the United

Digitized by Google

States, is that the party shall not be delivered up by this g
ernment to be tried for any other offence than that charged
the extradition proceedings; and that, when brought into t
country upon similar proceedings, he shall not be arrested
tried for any other offence than that with which he w
charged in those proceedings, until he shall have had a reas
able time to return unmolested to the country from which
was brought. This is undoubtedly a congressional const
tion of the purpose and meaning of extradition treaties such
the one we have under consideration, and whether it is or n
it is conclusive upon the judiciary of the right conferred u
persons brought from a foreign country into this under s
proceedings.

That right, as we understand it, is that he shall be tried o
for the offence with which he is charged in the extradi
proceedings and for which he was delivered up, and that if
tried for that, or after trial and acquittal, he shall have a
sonable time to leave the country before he is arrested u
the charge of any other crime committed previous to his ex
dition.

This precise question has been frequently considered
courts of the highest respectability in this country. On
the earliest cases is that of *United States* v. *Caldwell*, 8 Bla
ford, 131. Caldwell was extradited from Canada, in 1
under the treaty of 1842 with Great Britain, charged with
gery. He was not tried for this offence, however, but
tried and convicted for bribing an officer of the United St
— an offence not designated in that treaty. In the Ci
Court of the United States, held by Judge Benedict, Cald
called the attention of the court to this fact, and claimed
under the treaty he could not be tried for any offence c
mitted prior to his extradition other than the one charge
the proceedings. To this plea the government interpos
demurrer, which was sustained, and the prisoner was t
convicted, and punished for the bribery. Judge Benedict
that, "while abuse of extradition proceedings, and war
good faith in resorting to them, doubtless constitute a
cause of complaint between the two governments, such

Digitized by Google

plaints do not form a proper subject of investigation in the courts, however much those tribunals might regret that they should have been permitted to arise. . . . But whether extradited in good faith or not, the prisoner, in point of fact, is within the jurisdiction of the court, charged with a crime therein committed; and I am at a loss for even a plausible reason for holding, upon such a plea as the present, that the court is without jurisdiction to try him. . . . And I cannot say that the fact that the defendant was brought within the jurisdiction by virtue of a warrant of extradition for the crime of forgery affords him a legal exemption from prosecution for other crimes by him committed."

The next case, tried before the same court, was that of *United States* v. *Lawrence*, 13 Blatchford, 295. Lawrence was extradicted from Ireland and brought into this country under the treaty of 1842 on a charge of a single and specific forgery. He was indicted and put upon his trial for other forgeries than that specified in the extradition proceedings. To his trial for any other forgery than that he objected by proper pleadings, on the ground that under the treaty with Great Britain he could not be so tried for other forgeries. Judge Benedict held that he could be so tried, and he was tried and a verdict of guilty was rendered. It appears, however, but not very clearly from any report of the case, that, though tried and convicted, and having pleaded guilty to the other offences of forgery, he was admitted to bail and no judgment was ever pronounced. Judge Benedict, adverting to the case of *United States* v. *Caldwell*, and to a decision of the Court of Appeals of New York in *Adriance* v. *Lagrave*, 59 N. Y. 110, proceeded to say:

"This ground of defence is, therefore, dismissed, with the remark that an offender against the justice of his country can acquire no rights by defrauding that justice. Between him and the justice he has offended, no rights accrue to the offender by flight. He remains at all times, and everywhere, liable to be called to answer to the law for his violations thereof, provided he comes within the reach of its arm."

And in addition to the proposition urged in the Caldwell

Digitized by Google

case, that a question of that character arising on the treaty exclusively for the consideration of the Executive Departmen of the respective governments, he proceeds to say:

"It is true that it [the act of Congress] assumes, as well may, that the offender will be tried for the offence upon whi his surrender is asked, but there are no words indicating th he is to be protected from trial for all other offences. T absence of any provision indicating an intention to prote from prosecution for other offences, in a statute having other object than the protection of extradited offenders, sufficient to deprive of all force the suggestion that the a of 1869, as a legislative act, gives to the treaty of 1842 t construction contended for by the accused." There are p haps two or three other cases in which the circuit or distr judges of the United States have followed these decisions re dered by Judge Benedict.

On the other hand, Judge Hoffman, of the District Court California, in the case of *United States* v. *Watts*, 8 Sawyer, 3 decided that the defendant, having been surrendered und the extradition treaty of 1842 by Great Britain, could not tried for other offences than those enumerated in that trea and supported this view with a very learned and able opinio Judge Deady, of the District Court of Oregon, in *Ex pa Hibbs*, 26 Fed. Rep. 421, 431, February 4, 1886, held, in rega to the treaty of 1842, that for a government to detain a pers extradited under that treaty for any other charge than t one for which he had been surrendered, "would be not only infraction of the contract between the parties to the treat but also a violation of the supreme law of this land in a ma ter directly involving his personal rights. A right of pers or property, secured or recognized by treaty, may be set up a defence to a prosecution in disregard of either, with t same force and effect as if such right was secured by an act Congress."

But perhaps the most important decisions on this questi are to be found in the highest courts of the states.

The case of *Adriance* v. *Lagrave*, 59 N. Y. 110, has be cited as supporting the doctrine held by Judge Benedict, an

Digitized by Google

undoubtedly the language of the opinion delivered by Chief Justice Church, for the court, in that case, adopts the reasoning of Judge Benedict's opinion. Considering the high character of that court, it may be proper to make an observation or two on that case. First. It seems that while Lagrave was held for trial in this country under extradition proceedings, by which he was removed from France under the treaty of 1843 with that nation, being out on bail, he was arrested under a writ in a civil suit for debt, which issued from one of the courts of the State of New York. He made application by a writ of *habeas corpus* to be released from this arrest, on the ground that he was protected from it by the terms of the treaty under which he was surrendered, which, in that respect, are similar to those of the treaty of 1842 with Great Britain. The difference between serving process in a civil action brought by a private party, whether arrest be an incident to that process or not, and the indictment and prosecution of a person similarly situated for a crime not mentioned in the treaty of extradition under which the defendant was by force brought to this country, is too obvious to need comment. And while it is unnecessary to decide now whether he could be so served with process in civil proceedings, it does not follow that he would be equally liable to arrest, trial, and conviction for a crime, and especially a crime not enumerated in the extradition treaty, and committed before his removal. Second. The case of *Adriance* v. *Lagrave* was decided in the Supreme Court of the State by an order discharging Lagrave from arrest under the writ, and the writ was vacated. This judgment was the unanimous opinion of the court, in which sat three eminent judges of that State, to wit, Daniels, Davis, and Brady. In the Court of Appeals this judgment was reversed by a divided court, Judges Folger and Grover dissenting.

While this is believed to be the only decision in the highest court of a state adopting that view of the law, there are three or four cases decided by appellate courts of other states, holding a directly opposite doctrine.

The first of these is *Commonwealth* v. *Hawes*, 13 Bush, 697. Hawes was demanded from the Dominion of Canada under

Digitized by Google

the treaty of 1842 on four indictments charging him with many acts of forgery, and was delivered up on three of th He was brought to trial on two of these indictments in courts of Kentucky and acquitted, while the other two w dismissed on motion of the attorney for the commonwea There were, however, other indictments pending against h charging him with embezzlement, and on one of these a tion was made to bring him to trial. Upon this motion question was raised whether, under the circumstances in gard to the extradition, he could be tried for that offe Judge Jackson, before whom the case was pending in Kenton County Criminal Court, decided that he was bound take judicial notice of the treaty of 1842 between the Un States and Great Britain, and that the defendant could not tried for any offence for which he was not extradited, altho he was within the power of the court, as the treaty was supreme law of the land. By the terms of that treaty he that Hawes could be tried for no other offence, because t treaty provides only for extradition in certain cases, and un certain circumstances of proof, and that the right of asylu to be held sacred as to anything for which the party was and could not be extradited. He adds:

"I do not mean to say that he [Hawes] may not herea be tried; but what I mean to say is, that in the face of treaty herein referred to, he is not to be tried until there reasonable time given him to return to the asylum from wh he was taken."

The case was carried to the Court of Appeals of Kentuc in which the whole matter was fully discussed, the opinion the court, a very able one, being delivered by Chief Jus Lindsay, in 1878. The substance of the opinion is thus sta in the syllabus:

"1. Extradited criminals cannot be tried for offences named in the treaty, or for offences not named in the warr of extradition. A prisoner extradited from the Dominion Canada under Art. 10 of the treaty of 1842 between the Uni States and Great Britain, cannot be proceeded against or tr in this State for any other offences than those mentioned

Digitized by Google

the treaty, and for which he was extradited, without first being afforded an opportunity to return to Canada; and, after being acquitted on trials for the offences for which he was extradited, he cannot be lawfully held in custody to answer a charge for which he could not be put on trial."

"3. The right of one government to demand and receive from another the custody of an offender who has sought asylum upon its soil, depends upon the existence of treaty stipulations between them, and in all cases is derived from, and is measured and restricted by, the provisions, express or implied, of the treaty."

In 1881 a case involving the same question came before the Texas Court of Appeals, *Blandford* v. *State*, 10 Tex. Ct. of App. 627, in which the same principles were asserted as in that of Hawes. The case seems to have been very well considered, and the authorities up to that date were fully examined.

In 1883 the same question came before the Supreme Court of Ohio, in *State* v. *Vanderpool*, 39 Ohio St. 273. Vanderpool and Jones having been delivered up under the treaty of 1842 by the Dominion of Canada for offences specified in that treaty, were tried, convicted, and sentenced to the penitentiary for the crimes for which they were extradited. They were afterwards indicted for other offences, to which they pleaded in abatement that by reason of the facts already stated they could not be tried for these latter offences until a reasonable time had elapsed after the expiration of their sentences for the crimes of which they had been convicted. The Supreme Court of Ohio, to which the case came on appeal from the judgment of the Court of Common Pleas, sustained this view, and this was done upon the same general reasoning, already stated, as to the construction to be placed upon the Ashburton treaty, of the obligations of that treaty as a law of the land; and of the rights conferred upon the party who was arrested and extradited under its provisions.

Upon a review of these decisions of the Federal and State courts, to which may be added the opinions of the distinguished writers which we have cited in the earlier part of this

Digitized by Google

opinion, we feel authorized to state that the weight of
thority and of sound principle are in favor of the proposit
that a person who has been brought within the jurisdictio
the court by virtue of proceedings under an extradition tre
can only be tried for one of the offences described in that tre
and for the offence with which he is charged in the proc
ings for his extradition, until a reasonable time and opportu
have been given him, after his release or trial upon such cha
to return to the country from whose asylum he had been fo
bly taken under those proceedings.

Two other observations remain to be made. One of t
is, that the operation of this principle of the recognition of
rights of prisoners under such circumstances by the co
before whom they are brought for trial, relieves the relat
between the Executive Department of the United States
ernment and the courts of a state before whom such case
be pending, of a tension which has more than once bec
very delicate and very troublesome. Of course, the inte
ence of the executive branch of the Federal government, w
it may have been called upon by the nation which has d
ered up a person to be tried for an offence against the law
a state, with the proceedings of a state court in such cas
likely to be resented by such court, and yet, if the only m
of enforcing the obligations of the treaty is through the ac
of the respective national governments, it would seem that
government appealed to ought to have the right to see
the treaty is faithfully observed, and the rights of parties
der it protected. In Great Britain the control of such mat
would undoubtedly be recognized by any court to be in
Crown, but in this country such a proposition is, to say
least, not unaccompanied by serious embarrassments.
principle we have here laid down removes this difficulty,
under the doctrine that the treaty is the supreme law of
land, and is to be observed by all the courts, state and natio
"anything in the laws of the states to the contrary notw
standing," if the state court should fail to give due effec
the rights of the party under the treaty, a remedy is foun
the judicial branch of the Federal government, which has b

Digitized by Google

fully recognized. This remedy is by a writ of error from the Supreme Court of the United States to the state court which may have committed such an error. The case being thus removed into that court, the just effect and operation of the treaty upon the rights asserted by the prisoner would be there decided. If the party, however, is under arrest and desires a more speedy remedy in order to secure his release, a writ of *habeas corpus* from one of the Federal judges or Federal courts, issued on the ground that he is restrained of his liberty in violation of the Constitution or a law or a treaty of the United States, will bring him before a Federal tribunal, where the truth of that allegation can be inquired into, and, if it be well founded, he will be discharged. *Ex parte Royall*, 117 U. S. 241, 251. State courts also could issue such a writ, and thus the judicial remedy is complete, when the jurisdiction of the court is admitted. This is a complete answer to the proposition that the rights of persons extradited under the treaty cannot be enforced by the judicial branch of the government, and that they can only appeal to the executive branches of the treaty governments for redress.

The other observation we have to make regards an argument presented in this particular case; namely, that the prisoner was convicted on the same testimony which was produced before the magistrate who ordered his extradition. Although it is thus stated in the brief, the record affords no sufficient evidence of it. What is found on that subject in the fourth question certified to this court is as follows:

"Was it error on the part of the trial judge to refuse to direct a verdict of acquittal, after it had been proven that the accused was extradited under the extradition treaty with Great Britain, upon the charge of murder, it also appearing that in the proceedings preliminary to the warrant of extradition the same act was *investigated*, and the same *witnesses* examined, as at the trial?"

It might be a sufficient answer to this argument to say that this does not prove that the *evidence* was the same upon the two trials. Although the act charged may have been the same and the witnesses may have been the same, yet the evi-

Digitized by Google

dence elicited on the last trial may have been very different from that obtained on the first. While the identity of facts investigated in the two trials is charged a little more specifically in the first question, we are of opinion that no importance should be attached to this matter, even if it were found that the party was convicted of inflicting cruel and unusual punishment on the seaman on the same evidence precisely upon which the committing magistrate in Great Britain delivered him up under a charge of murder. It may be very true that evidence which satisfied that officer that the prisoner was guilty of the crime of murder would also establish that he had inflicted cruel and unusual punishment on the person for whose murder he was charged; but, as the treaty only justified his delivery on the ground that he was proved to be guilty of murder before the committing magistrate, it does not follow at all that such magistrate would have delivered him on a charge, founded upon precisely the same evidence, of inflicting cruel and unusual punishment, an offence for which the treaty made no provision, and which was of a very unimportant character when compared with that of murder. If the party could be convicted on an indictment for inflicting cruel and unusual punishment where the grand jury would not have found an indictment for murder, the treaty could always be evaded by making a demand on account of the higher offence defined in the treaty, and then only seeking a trial and conviction for the minor offence not found in the treaty. We do not think the circumstance that the same evidence might be sufficient to convict for the minor offence which was produced before the committing magistrate to support the graver charge justifies this departure from the principles of the treaty.

This fourth question may also properly be treated as immaterial, for the question is, should the trial judge have directed a verdict of acquittal? As all the matters set up by the defendant are in the nature of pleas in abatement, going rather to the question of trial on that indictment at that time, and not denying that at some future time, when the defendant may have been properly brought within the jurisdiction of the court, or rightfully found within such jurisdiction, he may

Digitized by Google

be then tried, it did not involve an issue on the question of guilty or not guilty on which the court, if it proceeded to try that question at all, could direct either an acquittal or a conviction. Under the views we have taken of the case the jurisdiction of the court to try such an offence, if the party himself was properly within its jurisdiction, is not denied, but the facts relied upon go to show that while the court did have jurisdiction to find the indictment, as well as of the questions involved in such indictment, it did not have jurisdiction of the person at that time, so as to subject him to trial. The question therefore is immaterial.

The result of these considerations is, that the first of the questions certified to us is answered in the negative; the second and third are answered in the affirmative; and it is ordered to be so certified to the judges of the Circuit Court.

MR. JUSTICE GRAY concurring.

I concur in the decision of the court, upon the single ground, that by the act of Congress of March 3, 1869, c. 141, § 1, (embodied in § 5275 of the Revised Statutes,) providing measures by which any person, delivered up by a foreign government for the purpose of being tried here for a crime of which he has been accused, may be secured against lawless violence "until the final conclusion of his trial for the crimes or offences specified in the warrant of extradition, and until his final discharge from custody or imprisonment for or on account of such crimes or offences, and for a reasonable time thereafter," the political department of the government has clearly manifested its will, in the form of an express law, (of which any person prosecuted in any court within the United States has the right to claim the protection,) that the accused shall be tried only for the crime specified in the warrant of extradition, and shall be allowed a reasonable time to depart out of the United States, before he can be arrested or detained for another offence.

Upon the broader question whether, independently of any act of Congress, and in the absence of any affirmative restriction in the treaty, a man surrendered for one crime should

Digitized by Google

be tried for another, I express no opinion, because not satisfied that that is a question of law, within the cognizance of the judicial tribunals, as contradistinguished from a question of international comity and usage, within the domain of statesmanship and diplomacy.

MR. CHIEF JUSTICE WAITE dissenting.

I am unable to concur in the decision of this case. A fugitive from justice has no absolute right of asylum in a country to which he flees, and if he can be got back within the jurisdiction of the country whose laws he has violated, he may be proceeded with precisely the same as if he had not fled, unless there is something in the laws of the country where he is to be tried, or in the way in which he was got back, to prevent. I do not understand this to be denied. All, therefore, depends in this case on the treaty with Great Britain under which this extradition was effected, and § 5275 of the Revised Statutes. I concede that the treaty is as much a part of the law of the United States as is a statute; and if there is anything in it which forbids a trial for any other offence than that for which the extradition was made, the accused may use it as a defence to a prosecution on any other charge until a reasonable time has elapsed after his release from custody on account of the crime for which he was sent back. But I have been unable to find any such provision. The treaty requires a delivery up to justice, on demand, of those accused of certain crimes, but says nothing about what shall be done with them after the delivery has been made. It might have provided that they should not be tried for any other offences than those for which they were surrendered, but it has not. Consequently, as it seems to me, the accused has acquired no new rights under the treaty. He fled from the justice of the country whose laws he violated, and has been got back. The treaty under which he was surrendered has granted him no immunity, and therefore it has not provided him with any new defence. This seems to have been the view taken by the English government during the time of the controversy growing out of the demand made

Digitized by Google

for the extradition of Winslow; for, in the debate in the House of Lords, the Lord Chancellor (Cairns), while supporting the English view of the matter, and referring to the cases which had been cited against it, said: "In that class of cases . . . the prisoners, who had been surrendered on one charge, and who were being tried upon another, themselves attempted to raise the defence that they could not be tried for an offence different from that for which they had been surrendered. Such cases certainly have no application whatever to the present question, because nothing can be more clear than that a prisoner himself has no right to raise such a defence. Even in France, where . . . the law and practice of extradition goes far beyond that which prevails in this country and in the United States, a prisoner is not permitted to set up such a defence, for the clear reason that he is within the jurisdiction of the court, which has the authority to try him for the offence of which he is charged, and that whether he ought to be tried for an offence other than that for which he has been surrendered is a matter of diplomacy between the two countries, and not a question between the prisoner and the court before which he is being tried." Foreign Relations of the United States, 1876, 291.

This is, I think, the true rule, and it is in full accord with the principles applied by this court in *The Richmond*, 9 Cranch, 102, where it was insisted upon by way of defence that a vessel proceeded against for a violation of the non-intercourse act had been seized within the territorial jurisdiction of Spain. As to this Chief Justice Marshall said, in delivering the opinion of the court: "The seizure of an American vessel within the territorial jurisdiction of a foreign power is certainly an offence against that power, which must be adjusted between the two governments. This court can take no cognizance of it; and the majority of the court is of opinion that the law does not connect that trespass, if it be one, with the subsequent seizure by the civil authority, under the process of the District Court, so as to annul the proceedings of that court against the vessel." If either country should use its privileges under the treaty to obtain a surrender of a fugitive on the

Digitized by Google

pretence of trying him for an offence for which extradition could be claimed, so as to try him for one for which it could not, it might furnish just cause of complaint on the part of the country which had been deceived, but it would be a matter entirely for adjustment between the two countries, and which could in no way enure to the benefit of the accused except through the instrumentality of the government that had been induced to give him up.

As to § 5275 of the Revised Statutes I have only to say that, in my opinion, it neither adds to the rights of the accused nor changes the effect of the treaty as a part of the law of the United States. The accused was surrendered by Great Britain to the United States, and the United States are alone responsible to that country for whatever may be done with him in consequence of his surrender. He was delivered into the possession of the United States, and, in my opinion, that possession may at any time be regained by the United States under this statute from the State, or its authorities, so long as the accused remains in custody, if it should be necessary in order to enable them to keep their faith with Great Britain in respect to the surrender.

I do not care to elaborate the argument on either of these questions. My only purpose is to state generally the grounds of my dissent.

KER *v.* ILLINOIS.

ERROR TO THE SUPREME COURT OF THE STATE OF ILLINOIS.

Argued April 27, 1886. — Decided December 6, 1886.

A plea to an indictment in a State court, that the defendant has been brought from a foreign country to this country by proceedings which are a violation of a treaty between that country and the United States, and which are forbidden by that treaty, raises a question, if the right asserted by the plea is denied, on which this court can review, by writ of error, the judgment of the State court.

But where the prisoner has been kidnapped in the foreign country and brought by force against his will within the jurisdiction of the State

Digitized by Google

whose law he has violated, with no reference to an extradition treaty, though one existed, and no proceeding or attempt to proceed under the treaty, this court can give no relief, for these facts do not establish any right under the Constitution, or laws, or treaties of the United States.

The treaties of extradition to which the United States are parties do not guarantee a fugitive from the justice of one of the countries an asylum in the other. They do not give such person any greater or more sacred right of asylum than he had before. They only make provision that for certain crimes he shall be deprived of that asylum and surrendered to justice, and they prescribe the mode in which this shall be done.

The trespass of a kidnapper, unauthorized by either of the governments, and not professing to act under authority of either, is not a case provided for in the treaty, and the remedy is by a proceeding against him by the government whose law he violates, or by the party injured.

How far such forcible transfer of the defendant, so as to bring him within the jurisdiction of the State where the offence was committed, may be set up against the right to try him, is the province of the State court to decide, and presents no question in which this court can review its decision.

The plaintiff in error, being convicted of embezzlement in a State court of Illinois, sued out this writ of error. The Federal question, which makes the case, is stated in the opinion of the court.

Mr. C. Stuart Beattie for plaintiff in error. *Mr. Robert Hervey* was with him on the brief.

Mr. George Hunt, Attorney General of Illinois, and *Mr. P. S. Grosscup* for defendant in error. *Mr. Leonard Swett* was with them on the brief.

Mr. Justice Miller delivered the opinion of the court.

This case is brought here by a writ of error to the Supreme Court of the State of Illinois. The plaintiff in error, Frederick M. Ker, was indicted, tried, and convicted in the Criminal Court of Cook County, in that State, for larceny. The indictment also included charges of embezzlement. During the proceedings connected with the trial the defendant presented a plea in abatement, which, on demurrer, was overruled, and the defendant refusing to plead further, a plea of not guilty was entered for him, according to the statute of that State, by

Digitized by Google

order of the court, on which the trial and conviction took place.

The substance of the plea in abatement, which is a very long one, is, that the defendant, being in the city of Lima, in Peru, after the offences were charged to have been committed, was in fact kidnapped and brought to this country against his will. His statement is, that, application having been made by the parties who were injured, Governor Hamilton, of Illinois, made his requisition, in writing, to the Secretary of State of the United States, for a warrant requesting the extradition of the defendant, by the Executive of the Republic of Peru, from that country to Cook County; that, on the first day of March, 1883, the President of the United States issued his warrant, in due form, directed to Henry G. Julian, as messenger, to receive the defendant from the authorities of Peru, upon a charge of larceny, in compliance with the treaty between the United States and Peru on that subject; that the said Julian, having the necessary papers with him, arrived in Lima, but, without presenting them to any officer of the Peruvian government, or making any demand on that government for the surrender of Ker, forcibly and with violence arrested him, placed him on board the United States vessel Essex, in the harbor of Callao, kept him a close prisoner until the arrival of that vessel at Honolulu, where, after some detention, he was transferred in the same forcible manner on board another vessel, to wit, the City of Sydney, in which he was carried a prisoner to San Francisco, in the State of California. The plea then states, that, before his arrival in that city, Governor Hamilton had made a requisition on the Governor of California, under the laws and Constitution of the United States, for the delivery up of the defendant, as a fugitive from justice, who had escaped to that State on account of the same offences charged in the requisition on Peru and in the indictment in this case. The requisition arrived, as the plea states, and was presented to the Governor of California, who made his order for the surrender of the defendant to the person appointed by the Governor of Illinois, namely, one Frank Warner, on the 25th day of June, 1883. The defendant arrived in the city of San

Digitized by Google

Francisco on the 9th day of July thereafter, and was immediately placed in the custody of Warner, under the order of the Governor of California, and, still a prisoner, was transferred by him to Cook County, where the process of the Criminal Court was served upon him and he was held to answer the indictment already mentioned.

The plea is very full of averments that the defendant protested, and was refused any opportunity whatever, from the time of his arrest in Lima until he was delivered over to the authorities of Cook County, of communicating with any person or seeking any advice or assistance in regard to procuring his release by legal process or otherwise; and he alleges that this proceeding is a violation of the provisions of the treaty between the United States and Peru, negotiated in 1870, which was finally ratified by the two governments and proclaimed by the President of the United States, July 27, 1874. 18 Stat. 719.

The judgment of the Criminal Court of Cook County, Illinois, was carried by writ of error to the Supreme Court of that State, and there affirmed, to which judgment the present writ of error is directed. The assignments of error made here are as follows:

"First. That said Supreme Court of Illinois erred in affirming the judgment of said Criminal Court of Cook County, sustaining the demurrer to plaintiff in error's plea to the jurisdiction of said Criminal Court.

"Second. That said Supreme Court of Illinois erred in its judgment aforesaid, in failing to enforce the full faith and credit of the Federal treaty with the Republic of Peru, invoked by plaintiff in error in his said plea to the jurisdiction of said Criminal Court."

The grounds upon which the jurisdiction of this court is invoked may be said to be three, though from the briefs and arguments of counsel it is doubtful whether, in point of fact, more than one is relied upon. It is contended in several places in the brief that the proceedings in the arrest in Peru, and the extradition and delivery to the authorities of Cook County, were not "due process of law," and we may suppose, although

Digitized by Google

it is not so alleged, that this reference is to that clause of Article XIV of the Amendments to the Constitution of the United States which declares that no State shall deprive any person of life, liberty, or property "without due process of law." The "due process of law" here guaranteed is complied with when the party is regularly indicted by the proper grand jury in the State court, has a trial according to the forms and modes prescribed for such trials, and when, in that trial and proceedings, he is deprived of no rights to which he is lawfully entitled. We do not intend to say that there may not be proceedings previous to the trial, in regard to which the prisoner could invoke in some manner the provisions of this clause of the Constitution, but, for mere irregularities in the manner in which he may be brought into the custody of the law, we do not think he is entitled to say that he should not be tried at all for the crime with which he is charged in a regular indictment. He may be arrested for a very heinous offence by persons without any warrant, or without any previous complaint, and brought before a proper officer, and this may be in some sense said to be "without due process of law." But it would hardly be claimed, that after the case had been investigated and the defendant held by the proper authorities to answer for the crime, he could plead that he was first arrested "without due process of law." So here, when found within the jurisdiction of the State of Illinois and liable to answer for a crime against the laws of that State, unless there was some positive provision of the Constitution or of the laws of this country violated in bringing him into court, it is not easy to see how he can say that he is there "without due process of law," within the meaning of the constitutional provision.

So, also, the objection is made that the proceedings between the authorities of the State of Illinois and those of the State of California were not in accordance with the act of Congress on that subject, and especially that, at the time the papers and warrants were issued from the governors of California and Illinois, the defendant was not within the State of California and was not there a fugitive from justice. This argument is not much pressed by counsel, and was scarcely noticed in the Su-

Digitized by Google

preme Court of Illinois, but the effort here is to connect it as a part of the continued trespass and violation of law which accompanied the transfer from Peru to Illinois. It is sufficient to say, in regard to that part of this case, that when the governor of one State voluntarily surrenders a fugitive from the justice of another State to answer for his alleged offences, it is hardly a proper subject of inquiry on the trial of the case to examine into the details of the proceedings by which the demand was made by the one State and the manner in which it was responded to by the other. The case does not stand, when the party is in court and required to plead to an indictment, as it would have stood upon a writ of *habeas corpus* in California, or in any States through which he was carried in the progress of his extradition, to test the authority by which he was held; and we can see in the mere fact that the papers under which he was taken into custody in California were prepared and ready for him on his arrival from Peru, no sufficient reason for an abatement of the indictment against him in Cook County, or why he should be discharged from custody without a trial.

But the main proposition insisted on by counsel for plaintiff in error in this court is, that by virtue of the treaty of extradition with Peru the defendant acquired by his residence in that country a right of asylum, a right to be free from molestation for the crime committed in Illinois, a positive right in him that he should only be forcibly removed from Peru to the State of Illinois in accordance with the provisions of the treaty, and that this right is one which he can assert in the courts of the United States in all cases, whether the removal took place under proceedings sanctioned by the treaty, or under proceedings which were in total disregard of that treaty, amounting to an unlawful and unauthorized kidnapping.

This view of the subject is presented in various forms and repeated in various shapes, in the argument of counsel. The fact that this question was raised in the Supreme Court of Illinois may be said to confer jurisdiction on this court, because, in making this claim, the defendant asserted a right under a treaty of the United States, and, whether the assertion was

Digitized by Google

well founded or not, this court has jurisdiction to decide and we proceed to inquire into it.

There is no language in this treaty, or in any other tr made by this country on the subject of extradition, of w we are aware, which says in terms that a party fleeing f the United States to escape punishment for crime beco thereby entitled to an asylum in the country to which he fled; indeed, the absurdity of such a proposition would at prevent the making of a treaty of that kind. It will no for a moment contended that the government of Peru c not have ordered Ker out of the country on his arriva at any period of his residence there. If this could be d what becomes of his right of asylum?

Nor can it be doubted that the government of Peru c of its own accord, without any demand from the United St have surrendered Ker to an agent of the State of Illinois, that such surrender would have been valid within the do ions of Peru. It is idle, therefore, to claim that, either b press terms or by implication, there is given to a fugitive f justice in one of these countries any right to remain and r in the other; and if the right of asylum means anythin must mean this. The right of the government of Peru untarily to give a party in Ker's condition an asylum in country, is quite a different thing from the right in hi demand and insist upon security in such an asylum. treaty, so far as it regulates the right of asylum at all, i tended to limit this right in the case of one who is prove be a criminal fleeing from justice, so that, on proper dem and proceedings had therein, the government of the cou of the asylum shall deliver him up to the country where crime was committed. And to this extent, and to this al the treaty does regulate or impose a restriction upon the r of the government of the country of the asylum to protect criminal from removal therefrom.

In the case before us, the plea shows, that, although Ju went to Peru with the necessary papers to procure the extr tion of Ker under the treaty, those papers remained in pocket and were never brought to light in Peru; that no s

Digitized by Google

were taken under them; and that Julian, in seizing upon the person of Ker and carrying him out of the territory of Peru into the United States, did not act nor profess to act under the treaty. In fact, that treaty was not called into operation, was not relied upon, was not made the pretext of arrest, and the facts show that it was a clear case of kidnapping within the dominions of Peru, without any pretence of authority under the treaty or from the government of the United States.

In the case of *United States* v. *Rauscher*, just decided, *ante*, 407, and considered with this, the effect of extradition proceedings under a treaty was very fully considered, and it was there held, that, when a party was duly surrendered, by proper proceedings, under the treaty of 1842 with Great Britain, he came to this country clothed with the protection which the nature of such proceedings and the true construction of the treaty gave him. One of the rights with which he was thus clothed, both in regard to himself and in good faith to the country which had sent him here, was, that he should be tried for no other offence than the one for which he was delivered under the extradition proceedings. If Ker had been brought to this country by proceedings under the treaty of 1870–74 with Peru, it seems probable, from the statement of the case in the record, that he might have successfully pleaded that he was extradited for larceny, and convicted by the verdict of a jury of embezzlement; for the statement in the plea is, that the demand made by the President of the United States, if it had been put in operation, was for an extradition for larceny, although some forms of embezzlement are mentioned in the treaty as subjects of extradition. But it is quite a different case when the plaintiff in error comes to this country in the manner in which he was brought here, clothed with no rights which a proceeding under the treaty could have given him, and no duty which this country owes to Peru or to him under the treaty.

We think it very clear, therefore, that, in invoking the jurisdiction of this court upon the ground that the prisoner was denied a right conferred upon him by a treaty of the United States, he has failed to establish the existence of any such right.

Digitized by Google

The question of how far his forcible seizure in another cou try, and transfer by violence, force, or fraud, to this countr could be made available to resist trial in the State court, for t offence now charged upon him, is one which we do not fe called upon to decide, for in that transaction we do not s that the Constitution, or laws, or treaties, of the United Stat guarantee him any protection. There are authorities of t highest respectability which hold that such forcible abducti is no sufficient reason why the party should not answer wh brought within the jurisdiction of the court which has t right to try him for such an offence, and presents no val objection to his trial in such court. Among the authoriti which support the proposition are the following: *Ex pa Scott*, 9 B. & C. 446 (1829); *Lopez & Sattler's Case*, 1 Dears & Bell's Crown Cases, 525; *State* v. *Smith*, 1 Bailey, So. Ca Law, 283 (1829); *S. C.* 19 Am. Dec. 679; *State* v. *Brewster* Vt. 118 (1835); *Dow's Case*, 18 Penn. St. 37 (1851); *State Ross and Many*, 21 Iowa, 467 (1866); *Ship Richmond United States*, (*The Richmond*,) 9 Cranch, 102.

However this may be, the decision of that question is much within the province of the State court, as a question common law, or of the law of nations, of which that court bound to take notice, as it is of the courts of the United Stat And though we might or might not differ with the Illin court on that subject, it is one in which we have no right review their decision.

It must be remembered that this view of the subject d not leave the prisoner or the government of Peru witho remedy for his unauthorized seizure within its territory. Ev this treaty with that country provides for the extradition persons charged with kidnapping, and on demand from Pe Julian, the party who is guilty of it, could be surrendered a tried in its courts for this violation of its laws. The party hi self would probably not be without redress, for he could s Julian in an action of trespass and false imprisonment, and t facts set out in the plea would without doubt sustain the acti Whether he could recover a sum sufficient to justify the acti would probably depend upon moral aspects of the case, wh we cannot here consider.

Digitized by Google

We must, therefore, hold that, so far as any question in which this court can revise the judgment of the Supreme Court of the State of Illinois is presented to us, the judgment must be

Affirmed.

CAMPBELL v. LACLEDE GAS COMPANY.

ERROR TO THE SUPREME COURT OF THE STATE OF MISSOURI.

Submitted November 15, 1886. — Decided December 13, 1886.

A statute of Missouri authorized United States patents for lands within the State to be recorded, and provided that a certified copy of the patent should be received as *prima facie* evidence of the contents of the patent. In the record of a patent recorded under the provisions of this act, it appeared that there was a seal in due form, and that the instrument was perfect in every respect. No seal appeared in the record of the same patent in the General Land Office in Washington. The original patent not being in the possession or under the control of either party to the action: *Held*, That the presumption of law is that all that is found in either copy was in the original; that any important matter found in one which was not in the other was due to an accidental omission; and, that the *prima facie* case made by the record from Missouri was not overcome by the record from the General Land Office.

Section 891 of the Revised Statutes providing that authenticated copies of records in the General Land Office shall be "evidence equally with the originals thereof" does not mean that in all cases the copy should have the same probative force as the original instrument, but that it should be regarded as of the same class, in the grades of evidence, as to written or parol, and primary and secondary.

This was an action to try the title to real estate in Missouri. The case is stated in the opinion of the court.

Mr. Leverett Bell for plaintiffs in error.

Mr. C. Gibson and *Mr. C. E. Gibson* for defendant in error.

Mr. Justice Miller delivered the opinion of the court.

Digitized by Google

The writ of error in this case, directed to the Supreme Cou of Missouri, brings up for review the following judgment:

"Levina Campbell, Frank H. Murray and Annie L. Murray, his wife, and Charles J. January and Annie E. January, his wife, Respondents, *v.* The Laclede Gas-Light Company, Appellant, and the City of St. Louis.	Appeal from t St. Louis Cou of Appeals.

"Now at this day come again the parties aforesaid, by th respective attorneys, and, consenting that this court may p ceed to render such judgment as to them may seem prop upon the record herein, it is therefore considered and adjudg by the court, that the plaintiffs' cause of action was at the co mencement of this suit absolutely barred by the Missouri st ute of limitations, and that the plaintiffs are not entitled to t rights claimed by them under the act of Congress approv June 6th, 1874, entitled 'An Act for obviating the necess of issuing patents for certain private land claims, and for oth purposes;' and the judgment of the St. Louis Court of Appea and the judgment of the St. Louis Circuit Court herein, a reversed and held for naught; and it is ordered, adjudged, a decreed that the plaintiffs take nothing by this action, and th said defendant shall recover of the plaintiffs its costs in t behalf expended, and have execution therefor."

The question on which the jurisdiction of this court depen is whether the title to the land in controversy passed from t United States by the act of Congress of June 6th, 1874, referr to in this judgment, 18 Stat. 62, in which case the statute limitations was no bar, or by a patent issued March 26th, 18 to Pierre Chouteau, in which case it was a bar.

The question is still further narrowed because it depen upon whether the patent issued to Chouteau had the seal the United States for the General Land Office impressed up it. The patent itself was not in evidence, but the defenda who relied upon the statute of limitations, produced a certifi copy of the patent from the United States to Chouteau fr

Digitized by Google

the office of the recorder of deeds of St. Louis County, made in that office in 1847, in which copy a seal in due form appears, and the instrument is perfect in every respect. The law of Missouri on the subject of the recording of patents for lands lying within that State is found in §§ 3826 and 3827 of the Revised Statutes of that State. They are as follows:

"SECTION 3826. All patents for land lying within the State of Missouri, granted to any person or persons by the President of the United States or the governor of this State, may be recorded in the office of the recorder of the county in which the lands are situated.

"SECTION 3827. All copies of patents so recorded, or which may have heretofore been recorded, duly certified by the recorder under his official seal, shall be received in all courts in this State as *prima facie* evidence of the contents of such patents."

The record shows that the original patent was not in the possession or under the control of either party to this action. It is not denied that the copy produced from the office of the recorder of deeds makes a *prima facie* case of the transfer of the title from the United States to Chouteau in 1824. The plaintiff, however, undertook to impeach the validity of this copy by producing from the records of the General Land Office in Washington City a copy of the patent as there recorded. This copy is without a seal, and to make sure that this was not an accidental omission of the officer making the copy from the records of the land office, a letter of the Commissioner of that office, written at the time the copy was made, is produced, in which he says that he, himself, has examined with care the record from which the copy was taken and that no seal appears therein. He suggests, however, that while it is probable that the seal of the General Land Office was affixed to the patent, there is no authority to correct the record of it in the absence of said patent.

The case was tried without a jury, and judgment rendered for the plaintiffs. This judgment was affirmed, as the record states, *pro forma*, in the Court of Appeals, but was reversed by the Supreme Court, and judgment rendered for the defendant, as already cited.

Digitized by Google

It might be a question of some doubt whether this is not merely a decision of all these courts as to a matter of fact, in regard to which this court has no supervision over the judgment of the Supreme Court of the State of Missouri. But as the question really is, at what time the statute of limitations began to run in favor of the defendant, and as that depends upon whether the instrument called the patent to Chouteau is a valid patent, and as we concur in the opinion of the Supreme Court of Missouri on that subject, we think its judgment ought to be affirmed.

That the State of Missouri had a right to pass the statute which makes the record in the offices of that State of a patent from the United States *prima facie* evidence of the contents of that patent, does not seem to be doubted. Indeed, it was a very wise and needful provision; for without it the title to large quantities of land, which rested primarily in the patents from the United States, might be very difficult to establish by evidence of that title. By this statute parties were enabled to place this evidence in permanent form upon the records of the counties in which the land was situated, at the same time giving notice to all the world of their claim to such land. This record of the Chouteau patent being, therefore, authorized by a valid law, we see no reason why a transcript of it is not of as much actual value as evidence of the original patent, as a transcript from a similar record made at Washington City. In each instance the record is but the copy of the same instrument, made by different persons, who must be supposed to be equally honest, equally careful, and, therefore, equally accurate in the record which they made of the original. If there is found to be a variance in the two copies thus produced, it would naturally be supposed that all that is found in either copy was in the original, and that any important matter found in one copy which was not found in the other was due to an accidental omission, rather than that it was an accidental insertion of matter not in the original paper. Counsel for defendant argues that it is fairly to be inferred that there was a seal to the original patent, and that its record was accidentally omitted, because this patent, like all others, contains in

Digitized by Google

the testimonium the language of the President, that "I have caused these letters to be made patent, and the seal of the General Land Office to be hereunto affixed." Whatever force might be given to this language as evidence that there was a seal to the original is lost by reason of the failure to incorporate either one of the transcripts in the record of the case as it comes to us.

The case of *McGarrahan* v. *Mining Company*, 96 U. S. 316, 323 — so far from sustaining the doctrine claimed by counsel for plaintiffs in error, that the act of Congress, Rev. Stat. § 891, making certified copies from the books of the Commissioner of the General Land Office evidence equally with the originals, makes the copy in this case with the seal omitted conclusive against the record from the St. Louis office — recognizes the fact that there is nothing in the statute, either express or implied, which forbids a party from showing by extrinsic proof, otherwise legitimate, what the contents of the lost original really were, when it is shown that the record itself, or the transcript from it, is not a true copy; and it further holds that the party is not necessarily deprived of his rights on account of the defective record in the General Land Office.

The words "evidence equally," as used in the act of Congress, were not intended to mean that *in all* cases the copy should have the same probative force as the original instrument, but that it should be regarded as of the same class, in the grades of evidence, as to written and parol, and primary and secondary. It could not have been intended to say that when the existence of the instrument is conceded, but a question arises as to some particular word or figure, the copy would be as convincing as the original.

On the whole, we are of opinion that the *prima facie* case made by the record of the patent in the recorder's office of St. Louis County is not overcome by what purports to be a copy of the same from the records of the General Land Office in Washington, and that the judgment of the Supreme Court of Missouri must be

Affirmed.

Digitized by Google

WINCHESTER *v.* HEISKELL.

ERROR TO THE SUPREME COURT OF THE STATE OF TENNESSEE.

Submitted November 29, 1886. — Decided December 13, 1886.

A, being defendant in a suit in a State court to set aside a deed of real estate, employed B as attorney and counsel to defend the suit. While the suit was pending A conveyed the tract to C as trustee to secure certain debts and liabilities of A. A became bankrupt, and D was appointed his assignee. After all these proceedings B succeeded in obtaining a decree establishing A's title to the tract, which decree recited that the assignee in bankruptcy had become a party to the decree, and that the cause was remanded by consent for a report as to what was a reasonable counsel fee for B, which was declared to be a lien on the premises. After report the property was sold to B to satisfy that lien. In an action to enforce the lien under the trust deed to C as superior to that of B; *Held*, (1) That the State court had jurisdiction so as to bind those who were parties to the suit and those whom the parties in law represented; (2) that the assignee in bankruptcy having appeared in the State court and litigated his rights there, he and those whom he represented were bound by the decree.

The following is the case as stated by the court.

The facts disclosed by the record are in brief as follows:

On the 16th of February, 1869, Annie L. Jones and others, the widow and heirs-at-law of William E. Jones, deceased, filed their bill in the Chancery Court of Shelby County, Tennessee, against D. H. Townsend to set aside and cancel a sheriff's deed purporting to convey certain lands to him, and to be quieted in their title to the property. The defendants in error, Heiskell, Scott & Heiskell, were employed by Townsend to defend this suit, which they did successfully, and at the December Term, 1876, obtained a decree of the Supreme Court of the State establishing his title to the property. On the 18th of June, 1875, while this suit was pending, Townsend conveyed the land in dispute to George W. Winchester, in trust, to secure certain debts owing by him, and for which Benjamin May was bound as indorser. On the 30th of November, 1875, Town-

Digitized by Google

send filed his petition in bankruptcy, and on the 12th of January, 1876, T. P. Winchester was duly appointed his assignee.

In the decree of the Supreme Court establishing the title of Townsend to the land appears the following:

"And it being suggested to the court that, pending the proceeding in this court, the title of the said Townsend has been assigned to Thomas S. Winchester, assignee in bankruptcy, it is, with the consent of the said Townsend by his counsel, ordered that the said Winchester be made a party to this decree, and, by consent, this cause is remanded to the Chancery Court of Shelby County to take . . . an account and make report of the reasonable counsel fee of the counsel, Heiskell, Scott & Heiskell, for which a lien is hereby declared on the premises in controversy, the said Winchester asking that the account be taken below."

Under this order the cause was remanded, the account taken in the Chancery Court, the amount due ascertained, the lien declared, and the property sold to Heiskell, Scott & Heiskell for its satisfaction.

On the 12th of February, 1880, the present appellants filed this bill in the Chancery Court of Shelby County against Heiskell, Scott & Heiskell to enforce the lien of the deed of trust executed by Townsend to George W. Winchester, trustee, claiming that their title under this deed is superior to that of the defendants under their purchase at the sale which had been ordered in the former case. In their bill they allege that they are not bound by the decree in the original suit, because "neither they nor the interest in said land that they represented were before the court when said decree was pronounced, and they had no representative before said court. The suit was not revived or reinstated in their names or in the name of the trustee after Townsend's bankruptcy and the assignment of his assets in bankruptcy." This is the substance of the allegations of the bill on this branch of the case. The hearing was originally had before a commission of referees appointed under a statute of Tennessee, and in their report it is said, among other things: "This proceeding in the Chancery Court, on the reference as to the amount of the fee, &c., is not such a

Digitized by Google

matter in bankruptcy as is contemplated by § 711 of the Revised Statutes of the United States, 1874, especially under the circumstances of this case." The report of the referees was confirmed by the Supreme Court. In its first decision no reference was made to the question of the jurisdiction of the State court in the original suit to adjudicate as to the lien for fees, in view of the provisions of § 711 of the Revised Statutes; but, on a petition for rehearing and a suggestion of this omission, the decree was modified as follows:

"The court being of the opinion that this court had jurisdiction in the case of *Annie L. Jones* v. *D. H. Townsend*, mentioned and set forth in the record, to declare the attorneys' lien in favor of the defendants in this case on the tract of land described in the pleadings, and that the Chancery Court of Shelby County, Tenn., had jurisdiction to enforce said lien on said property by the proceedings, decrees, and sale, as shown in the record, notwithstanding the bankruptcy of D. H. Townsend and the bankrupt proceedings in the District Court of the United States for the Western District of Tennessee, as shown in the record, and notwithstanding the provisions of the 711th section of the Revised Statutes of the United States, and notwithstanding the provisions of the sections of said Revised Statutes embraced in Title 61, 'Bankruptcy,' the court adjudges that the authority exercised by the State courts in said proceedings is not repugnant to the said laws of the United States. In construing said laws of the United States, the court is of the opinion that, under the circumstances of the case as shown by the record, the said State courts had the jurisdiction to declare and enforce said liens on the land in question, and that under the said proceedings the defendants acquired a good and valid title to the land in controversy, and that the title is not and was not void and a cloud on the complainants' right and title, and the court doth so order and decree."

Upon this state of facts the appellees moved, (1) to dismiss the writ of error for want of jurisdiction; or, (2) to affirm under Rule 6, clause 5.

Mr. Henry Craft, *Mr. T. B. Turley*, and *Mr. L. W. Humes* for the motions.

Digitized by Google

Mr. B. M. Estes opposing.

MR. CHIEF JUSTICE WAITE, after stating the case, delivered the opinion of the court.

One of the questions presented by the bill was as to the binding effect of the decree in the original case upon the complainants in this suit. Objection was not made in the pleadings to the jurisdiction of the court over the subject-matter of the action on account of the exclusive jurisdiction of the courts of the United States, under § 711 of the Revised Statutes, "of all matters and proceedings in bankruptcy," but it clearly was at the trial before the referees, and it was directly presented to and decided by the Supreme Court. An immunity was claimed by the appellants under this statute from the operation of the decree of the State court on their rights, because that statute made the jurisdiction of the courts of the United States exclusive in such cases. We thus have jurisdiction, but as the decision of the State court upon this question was clearly right, we do not care to hear further argument. The assignee in bankruptcy appeared in the State court and litigated his rights there. This he had authority to do, and the judgment in such an action is binding on him. This we have many times decided. *Mays* v. *Fritton*, 20 Wall. 414; *Doe* v. *Childress*, 21 Wall. 642, 647; *Scott* v. *Kelly*, 22 Wall. 57; *Eyster* v. *Gaff*, 91 U. S. 521; *Burbank* v. *Bigelow*, 92 U. S. 179, 182; *Jerome* v. *McCarter*, 94 U. S. 734, 737; *McHenry* v. *La Société Française*, 95 U. S. 58; *Davis* v. *Friedlander*, 104 U. S. 570. The question here is not whether that decree thus rendered binds these appellants, but whether the State court had jurisdiction so as to bind those who were parties to the suit, and those whom the parties in law represented.

The motion to dismiss is denied, and that to affirm granted.

Digitized by Google

CLEVELAND, COLUMBUS, &c., RAILROAD v. McCLUNG.

ERROR TO THE CIRCUIT COURT OF THE UNITED STATES FOR THE SOUTHERN DISTRICT OF OHIO.

Argued November 12, 1886. — Decided December 13, 1886.

A suit against a collector of the customs in a State court, in which the declaration alleges that the collector by his deputy delivered imported goods upon which there was a lien for freight to the consignee on receipt of the freight charges, without notifying the carrier as required by the act of June 10, 1880, § 10, 21 Stat. 175, and which seeks to recover the money so received, is removable into the Circuit Court of the United States under Rev. Stat. § 643, although the collector may allege in his defence that the act charged was not done.

A collector of customs is not authorized by the provisions of the act of June 10, 1880, c. 202, 21 Stat. 173, to collect the freight upon the transported goods, or to receive it for the lien-holder; and if a deputy collector, who acts as cashier of the collector, does so collect or receive the freight, his act is an unofficial act which entails no official responsibility upon the collector, his superior.

The following is the case as stated by the court.

The case presents the following facts: D. W. McClung held the office of collector of customs and surveyor of the port of the city of Cincinnati, under the laws of the United States, and J. L. Wartman was employed by him, with the approval of the Secretary of the Treasury, as deputy collector of customs. As such deputy Wartman acted as the cashier of the collector. Section 10 of the act of June 10, 1880, c. 190, 21 Stat. 175, is as follows:

". . . That whenever the proper officer of the customs shall be duly notified in writing of the existence of a lien for freight upon imported goods, wares, or merchandise in his custody, he shall, before delivering such . . . merchandise to the importer, owner, or consignee thereof, give reasonable notice to the party or parties claiming the lien; and the possession by the officers of customs shall not affect the dis-

Digitized by Google

charge of such lien, under such regulations as the Secretary of the Treasury may prescribe; and such officer may refuse the delivery of such merchandise from any public or bonded warehouse or other place in which the same shall be deposited, until proof to his satisfaction shall be produced that the freight thereon has been paid or secured; but the rights of the United States shall not be prejudiced thereby, nor shall the United States or its officers be in any manner liable for losses consequent upon such refusal to deliver. If merchandise so subject to a lien, regarding which notice has been filed, shall be forfeited to the United States and sold, the freight due thereon shall be paid from the proceeds of such sale in the same manner as other charges and expenses authorized by law to be paid therefrom are paid." This is part of "an act to amend the statutes in relation to immediate transportation of dutiable goods."

The Cleveland, Columbus, Cincinnati and Indianapolis Railroad Company was a common carrier, and as such designated by the Secretary of the Treasury for the purpose of receiving and transporting dutiable goods from the port of arrival to the port of destination under this act of Congress. As such carrier, so designated, this company carried to Cincinnati large quantities of dutiable goods, the freight and charges upon which amounted in the aggregate to $8477.50, and placed them in the custody and control of McClung as collector of customs and surveyor of the port, and, as is claimed, notified him in writing of its lien as carrier for such freight and charges. Wartman, as deputy collector, had charge, under McClung, of the collection of customs payable at the port of Cincinnati, and of the delivery of imported merchandise to the consignees thereof. He received the freight and charges due the company from the consignees of these goods at the same time that he received the duties, and delivered the goods to the consignees without notifying the company. The charges were never paid by him either to the company or to McClung.

Such being the conceded facts, this suit was brought against McClung in the Superior Court of Cincinnati. In the petition it is averred that McClung was collector, &c.; that the rail-

Digitized by Google

road company had carried and delivered the goods to him under the act, charged with a lien thereon for freight, of which due notice was given to him in writing, as provided in the act; and "that it became and was the duty of the defendant, as such officer, to refuse to deliver the said goods and merchandise until such freight thereon had been paid to the common carrier." It is then averred that the consignees paid the charges due the company to the defendant, "and the defendant then and there received" the same "for the account and benefit of the said . . . company, and the defendant then and thereupon caused the said goods and merchandise to be delivered to the consignees, . . . without notice to the railroad company, whereby its lien for said freight was lost;" and that "the defendant, though often requested, has not paid said" money to the plaintiff, but the same, "with interest from September 8th, 1881, is now due and unpaid from the defendant to the plaintiff."

Summons in the action was served on McClung, March 21, 1882, and on the 7th of November following he filed, in the Circuit Court of the United States for the Southern District of Ohio, his petition, under § 643 of the Revised Statutes, for a writ of *certiorari* to the State court, requiring that court to send to the Circuit Court the record and proceedings in the cause, on the ground that, "at the time the said acts charged in such petition are alleged to have been done, he was, and still is, an officer of the United States, appointed and acting under the authority of the revenue laws of the United States, . . . and all his acts in connection with the receipt and delivery of the merchandise described in said petition were done by him under color of his said office." Upon this petition a writ of *certiorari* was issued and the record and proceedings removed. Upon the entry of the cause in the Circuit Court the railroad company moved that it be remanded, "for the reason that this court has no jurisdiction of the person or subject-matter of the action." This motion was denied, November 15, 1882, and on the 12th of February, 1883, McClung answered the petition in the suit, denying that he had been notified of the lien, or that it had ever become his duty to re-

Digitized by Google

fuse to deliver the goods until the freight was paid, and also denying that he had ever received the freight for the benefit of the company.

Upon the trial it was shown that the freight and charges were paid to Wartman at the same time with the duties, and that, upon such payment, the goods were delivered to the consignees, without notice to the carriers. The plaintiff also offered further evidence "tending to prove that it had been the general usage and custom prevailing at the custom office of Cincinnati for ten years prior to the appointment of the defendant, and was the general usage and custom at the said office after the defendant's appointment, on March 18th, 1881, and down to the 8th of September, 1881, for the consignees of imported goods brought to the port of Cincinnati by all the common carriers who are authorized under said act to transport imported merchandise to the port of its destination, to pay the freights due to such common carrier at the office of the collector and of the cashier deputy of the surveyor of the port when a . . . notice in writing of the existence of a lien thereon in favor of the carrier had been given to the deputy collector at such office, and that such payments were exacted and required by the deputy collector as a precedent condition to the delivery of such goods by the surveyor of the port to the owners and consignees thereof, and that such freights were paid, together with the duties due upon such imported goods, to such deputy collector, sometimes in money, but most generally in checks, which included duties due to the government and the freights due for the carriage of said goods, and which checks were drawn by the consignees in favor of the surveyor of the port by name, or of the 'collector' or 'surveyor' of customs at the port of Cincinnati, which checks were indorsed and collected by such deputy collector for the collector or surveyor in his official capacity, and were collected in the usual course of business by such deputy collector; and that, upon the receipt of such money or checks in payment of duties and freight, the goods were, by the order of said deputy, with the acquiescence of the surveyor of the port, delivered to the respective consignees; and that the deputy collector, in

Digitized by Google

his official capacity, accounted with and paid over the freights so collected to the common carrier of such imported goods, from time to time, as the same were demanded."

There was also evidence tending to prove that the payments in this case were made in accordance with this custom and upon the demand of Wartman.

McClung was sworn as a witness in his own behalf, and testified that Wartman was acting as deputy when he came into office, and attending to the receipt of duties, and was continued in the same service by him; that he was never authorized to sign or indorse checks, and that he, McClung, was not aware that he had ever done so. He also testified that he had no knowledge whatever of the fact that Wartman was receiving freight moneys until September 6, 1881, which was after all these payments were made, and that there was not kept in the office any account of moneys received for freights.

At the close of the testimony the court charged the jury, among other things, as follows:

"In order to authorize a recovery against the defendant for failing to give the seasonable notice to the plaintiff required by the statute, before delivering the goods to the owners or consignees, an averment that the freights due plaintiff and for which it had a lien were owing and unpaid is necessary. There is no such averment in the plaintiff's petition in this case; on the contrary, it distinctly avers that the consignees did pay the freights to the defendant, and, while it does not say in express terms that it authorized such payments to be made, by demanding and suing for the same, as it has done, ratifies and confirms the payments, and claims that the money was received for its account and benefit, and demands judgment therefor. This is in fact the *gravamen* of its complaint, the theory upon which its suit rests, and the court instructs that you are here to try this case upon the hypothesis that the freights due from the consignees to the plaintiff for the carriage of the goods in question were paid before the goods were delivered by the defendant to the consignees, and that the defendant was therefore under no legal duty to give the plaintiff notice of his intention to make such delivery."

Digitized by Google

"It was competent for the parties, by express contract, or by a tacit understanding resulting from an established course of business, for the benefit and convenience of both parties, to agree that the defendant should receive the freights due the carrier for the account of the latter, and upon receipt thereof deliver the goods to the owners or consignees, and that such receipts by him should be in lieu of the notice which the law required him to give the carrier in the contingency described by the statute. It may be that such tacit or implied agreement existed between these parties in this case. This is the question for you to determine. The defendant was under no official or legal obligation to undertake to thus act for the plaintiff. If he did so, he was but acting in his private capacity and not in the discharge of any official duty. It not being an official duty, his deputy could not thus act by reason of his official relations to his superior, and the defendant would not be liable for such extra official action unless he had in some way authorized his deputy so to act, or unless he has so acted as to estop him from denying that the deputy was in the specific matter complained of acting by his authority for him."

"If defendant had knowledge of this custom, acquired from observation from the business and books of his office, or through other sources, and acquiesced therein, and permitted the plaintiff to make its collections through his deputy in the belief that he was acting for and as his agent, or by his acts or declarations represented or held him out as his agent in the matter, the plaintiff and defendant, both understanding and tacitly or otherwise agreeing that the freights due the plaintiff should be paid in this way, in lieu of the notice which the statute in the contingency described required the defendant as collector to give to the plaintiff, he would be liable to the plaintiff for all sums so paid to the deputy for the plaintiff's use."

"If the deputy acted without authority from the defendant, and the defendant did not know of his said action, nor hold him out to the plaintiff as his agent, nor do nor say anything to mislead the plaintiff nor its officers nor agents, nor under-

Digitized by Google

take nor assume to collect plaintiff's freight, he would not be liable to plaintiff's demand, and your verdict ought to be in his favor."

To all this the railroad company excepted. There were other instructions to which exceptions were also taken, but they were all substantially embraced in the above, and it is unnecessary to repeat them here.

The jury returned a verdict for the defendant, upon which a judgment was entered, and the case is now here for review. The errors assigned were (1), that the court overruled the motion to remand; and (2), that it instructed the jury as above stated.

Mr. S. H. Holding for plaintiff in error (*Mr. E. W. Kittredge* was on the brief) cited: *Dignan* v. *Shields*, 51 Texas, 322; *Badger* v. *Gutierez*, 111 U. S. 734; *Ogden* v. *Maxwell*, 3 Blatchford, 319; *McIntyre* v. *Trumbull*, 7 Johns. 35; *Mason* v. *Fearson*, 9 How. 248; *Clinton* v. *Strong*, 9 Johns. 370; *Martin* v. *Webb*, 110 U. S. 7; *Case* v. *Bank*, 100 U. S. 446; *King* v. *Bangs*, 120 Mass. 514; *Gooding* v. *Shear*, 103 Mass. 360.

Mr. Benjamin Butterworth (*Mr. Chaning Richards* was with him on the brief) cited: *United States* v. *Collier*, 3 Blatchford, 349; *Whitfield* v. *Le Despencer*, Cowp. 754; *Wiggins* v. *Hathaway*, 6 Barb. 632; *Conwell* v. *Voorhees*, 13 Ohio, 523; *S. C.* 42 Am. Dec. 206; *Brissac* v. *Lawrence*, 2 Blatchford, 121; *Tennessee* v. *Davis*, 100 U. S. 257; *Osborn* v. *Bank of the United States*, 9 Wheat. 738.

Mr. Chief Justice Waite, after stating the case, delivered the opinion of the court.

The removal was under § 643 of the Revised Statutes, which provides, among other things, for the removal of "a civil suit . . . commenced in any court of a State against an officer appointed under or acting by authority of any revenue law of the United States, . . . on account of any act done under color of his office." This is a suit against a collector of cus-

Digitized by Google

toms, an officer appointed under the revenue laws of the United States, for an act alleged to have been done by him in the delivery of dutiable goods placed in his hands by virtue of his office subject to a carrier's lien. His liability, if any there is, grows out of his official duty to keep the goods and deliver them to the consignees thereof when the import duties are paid and the carrier's lien discharged. The allegation is, that the collector, instead of notifying the carrier, as the law required, delivered the goods to the consignees on receiving himself the moneys due for the carrier's charges. This suit is for the money so received. Clearly, then, according to the allegations of the petition, the suit is for an act done by the collector under color of his office. This is not seriously denied, but the claim is, that, as the defendant insists, and the court below has decided, that it was not the official duty of the collector to collect the carrier's money, and, therefore, that he is not liable for the acts of his deputy in that behalf, the suit is really one that could not be removed. But the petition alleges an act done by the collector under color of his office, and seeks a recovery on that account. Such a suit is removable, and certainly the right to a removal is not taken away because the collector says in his defence that the act charged was not in fact done. If done by him it was done under color of his office. The thing to be tried is whether it was done.

We agree entirely with the court below in the view it took of the character of the suit which has been brought. It is not for damages for delivering the goods without notice to the carrier, but for the charges collected on the delivery. That is the case made, both by the petition and upon the trial. The whole effort on the part of the company, so far as the record discloses, was to show that it was, and had been for years, the general usage in Cincinnati for consignees to pay the carrier's charges upon dutiable goods carried, and held in the custom house for the payment of duties, to the cashier deputy of the collector, and that such payments were exacted and required by the deputy as a condition precedent to the delivery, he accounting to the carriers for the money received on this account. The claim was that these payments had been made pursuant

Digitized by Google

to this custom, and that the collector was bound by the acts of the deputy, and liable for his defaults. If the suit had been to recover damages for the delivery without notice, this proof might perhaps have come from the other side to show that the carriers had, by long usage, made the deputy their agent to collect their charges, and that, as the payment had in this case been made to the deputy in accordance with that custom, no notice was required. We are clear, therefore, that the whole case turns upon the question whether the collector is liable for these collections of the deputy.

Section 2630 of the Revised Statutes gives authority to every collector of customs to employ, with the approval of the Secretary of the Treasury, "such number of persons as deputy collectors as he shall deem necessary, and such deputies are declared to be officers of the customs." There can be no doubt that the collector is answerable for all the acts of his deputies in the performance of their official duties under him. The real question here is, therefore, whether the collection of the carrier's charges was a part of the official duty of the collector. If it was, the collection by the deputy was an official act, and the principal officer is liable accordingly.

What, then, was the duty of the collector under this statute? Clearly, to take the goods from the carrier when brought, and not to deliver them to the consignees without first giving seasonable notice to the person or persons who had notified him in writing of the existence of a lien in their favor thereon for freight. The statute neither made it his duty to collect the freight nor authorized him to receive it for the lien-holder. Payment to him would not have been a payment to the carrier, so as to discharge the consignee from liability for the freight, unless the carrier had made him his personal agent for that purpose, in which case he would receive the money not as collector, but in his private capacity as the representative of the person to whom the money was due. The money in his hands on this account would not be in any sense public moneys, for which he was officially liable to the government, but private moneys, collected in a private capacity, for which he was accountable only to the person from whom he received his

Digitized by Google

authority. So, too, if he had received the freight without authority, and the carrier had sued him for it, he would be liable because the carrier, by suing, would have ratified his act and accepted his agency in the premises. But his liability in that case would not be official as collector, but private as the agent of the carrier.

It follows that the payment of the freight to the deputy was not in law a payment to McClung, unless the deputy, in making the collection, was acting under authority from him, not in his official, but in his private capacity. For this purpose it is not sufficient that Wartman, to whom the payments were made, was the official deputy of McClung as collector. It must appear that he was his private agent in this behalf. That question was fairly submitted to the jury under proper instructions, and the verdict was against the company, and to the effect that McClung had not authorized Wartman to receive the freight moneys on his account. That concludes this point.

As the alleged exactions of the deputy were not within the scope, either actual or apparent, under the law, of the authority of the collector's office, the case is not within the principle which, under some circumstances, makes the officer liable for the illegal and wrongful acts of his deputy, of which *Ogden* v. *Maxwell*, 3 Blatchford, 319, and *McIntyre* v. *Trumbull*, 7 Johns. 35, cited in the brief of counsel for the company, are examples. And, besides, here the exactions, if any, were not from the company, but from the consignees, who alone can complain. If they were made without the authority of the company to whom the freight belonged, the company is under no obligation to accept the payment thus exacted in discharge of its debt for the freight, and may still proceed against the consignees for its recovery.

If this were a suit for delivering the goods without notice to the company, a different rule would apply. As it was the duty of the collector, as collector, to notify the company before delivery, and not to deliver until proof to his satisfaction had been produced that the freight had been paid or secured, it would have been a breach of official duty for the

Digitized by Google

deputy to make the delivery before the notice, and the act of the deputy would have been in law the act of his principal. Such a case would be within *Ogden* v. *Maxwell* and *McIntyre* v. *Trumbull*, and others of like import, which are very numerous. But, as has already been shown, this suit is not of that character. It is for the money paid, and not for delivery without payment.

It follows that there is no error in the record, and the judgment is consequently

Affirmed.

BALTIMORE & OHIO RAILROAD *v.* BATES.

ERROR TO THE SUPREME COURT OF THE STATE OF OHIO.

Argued November 12, 1886. — Decided December 13, 1886.

Subsections "First" and "Second" of Rev. Stat. § 639, relating to the removal of causes from State courts to Federal courts were repealed by the act of March 3, 1875, 18 Stat. 470; but subsection "Third" was not so repealed.

Under subsection "Third," of Rev. Stat. § 639, a petition for the removal of a cause from a State court to a Federal court may be filed at any time before final trial or hearing.

On a petition for removal of a cause from a State court under subsection "Third" of Rev. Stat. § 639, the petitioning party is required to offer to the court the "good and sufficient surety" required by that section for the purposes therein set forth; and not the surety required by the act of March 3, 1875, § 3, 18 Stat. 471, for the purposes named in that act.

This suit was brought in the Court of Common Pleas of Licking County, Ohio, on the 1st of July, 1875, by George Bates, a citizen of Ohio, against the Baltimore and Ohio Railroad Company, a Maryland corporation, and having its principal office in that State, to recover damages for personal injuries. The railroad company filed a general demurrer to the petition, on the 20th of September, 1876, and on the 7th of April, 1877, this demurrer was sustained and judgment entered in favor of the company.

Digitized by Google

On the 7th of July, 1877, this judgment was reversed by the District Court of the county, and the cause remanded to the common pleas for further proceedings. When the case got back, the railroad company filed a petition for removal to the Circuit Court of the United States for the Southern District of Ohio, under sub-section 3 of § 639 of the Revised Statutes, on the ground of prejudice and local influence. The petition was in proper form, and it was accompanied by the necessary affidavit, but the security was such as was prescribed by § 639 of the Revised Statutes, and not such as was required by § 3 of the act of March 3, 1875, c. 137, 18 Stat. 470. The act of 1875 requires security for "all costs that may be awarded by the said Circuit Court, if the said court shall hold that such suit was wrongfully or improperly removed thereto." This is not found in § 639.

The petition for removal was denied by the Court of Common Pleas, December 22, 1877, and thereupon the railroad company answered, and the parties went to a trial May 23, 1878, when a judgment was rendered against the company. The case was taken then, on petition in error, to the District Court of the county, because, among others, the court erred in denying the petition for removal. On the 28th of February, 1880, the District Court reversed the judgment for this error, and the case was then taken to the Supreme Court of the State, where the judgment of the District Court was reversed, and that of the common pleas affirmed, on the 15th of May, 1883, that court holding that the security was defective, because it was not such as the act of 1875 required. To reverse that judgment this writ of error was brought.

Mr. Hugh L. Bond, Jr., (*Mr. John K. Cowen* was with him,) for plaintiff in error.

Mr. Gibson Atherton, (*Mr. J. A. Flory* was with him,) for defendant in error, submitted on his brief. It was the intention of Congress, in framing the act of March 3, 1875, to consolidate and codify into one section, with one mode of procedure, all the law relating to the class of cases between citizens of dif-

Digitized by Google

ferent States provided for in the Constitution. We are aware that this court in the case of *Hess* v. *Reynolds*, 113 U. S. 73, has decided that the third paragraph of § 639 was not repealed by the act of 1875; but we respectfully ask the court for a reconsideration and overruling of that case. For if this third paragraph was not superseded by the act of 1875, this case was not removable under that paragraph, because the petition was not filed before the trial of the case.

The Revised Statutes, § 693, par. 3, provided that the petition for removal should be filed before "*the trial*" of the case. This case was put at issue by the demurrer, under § 260, Ohio Code, and "A trial is a judicial examination of the issues, whether of law or of fact, in an action or proceeding." Ohio Code, § 262. So that this case was finally tried and decided, and final judgment rendered before the petition for removal was filed, and the petition for removal does not aver that the case had not been tried, while the record showed it had been once tried.

But it is said that where the judgment of the court has been set aside and a new trial granted, the case is removable, and the case of *Insurance Company* v. *Dunn*, 19 Wall. 214, is cited. That case was decided under the act of March 2, 1867, which required the petition for removal to be filed "at any time before the *final hearing or trial* of the suit," while in the Revised Statutes the word "trial" is transposed from after the word "final," and placed before it, so as to make it conform to act of 1866. This change was not made for nothing. The case of *Insurance Company* v. *Dunn* had already been decided, which it is presumed Congress had full knowledge of before they enacted the Revised Statutes. "It is apparent that this change was not the result of accident, but was deliberately made to secure uniformity upon the subject, in view of the conflicting decisions between the Federal and State courts in the following cases: *Ackerly* v. *Vilas*, 24 Wis. 165; *Johnson* v. *Monell*, Woolworth, 390; *Insurance Co.* v. *Dunn*, 20 Ohio Stat. 175; *S. C.*, in error, 19 Wall. 214; *Bryant* v. *Rich*, 106 Mass. 180, 192."

This change in the wording of the statutes appears to have

Digitized by Google

been made in consequence of the construction given to the act of 1867, in 19 Wall.; for if Congress, having full knowledge of that decision, had intended to follow the act of 1867, they would have worded it the same. Thus the law is brought back to the state it had been in since the foundation of the government, and under which the rights of parties had been long settled by judicial decisions. See *King* v. *Cornell*, 106 U. S. 395, 397.

MR. CHIEF JUSTICE WAITE, after stating the case, delivered the opinion of the court.

Sub-sections 1 and 2 of § 639 were repealed by the act of 1875; *Hyde* v. *Ruble*, 104 U. S. 407; *King* v. *Cornell*, 106 U. S. 395, 398; *Holland* v. *Chambers*, 110 U. S. 59; *Ayres* v. *Watson*, 113 U. S. 594; but sub-section 3 was not. *Bible Society* v. *Grove*, 101 U. S. 610; *Hess* v. *Reynolds*, 113 U. S. 73, 80. Under sub-section 3, the petition for removal may be filed at any time before the final trial or hearing. *Insurance Co.* v. *Dunn*, 19 Wall. 214; *Vannever* v. *Bryant*, 21 Wall. 41; *Yulee* v. *Vose*, 99 U. S. 539, 545; *Railroad Co.* v. *McKinley*, 99 U. S. 147. This petition was filed after a new trial had actually been granted, and while the cause was pending in the trial court for that purpose. It was, therefore, in time, and no objection is made to its form.

As sub-section 3 has not been repealed, so much of the remainder of § 639 as is necessary to carry the provisions of that sub-section into effect remains in force, unless something else has been put in its place. It is not contended that anything of this kind has been done, unless it be by the operation of § 3 of the act of 1875, but that section by its very terms is only applicable to removals under § 2 of the same act. The language is, "that whenever either party, or any one or more of the plaintiffs or defendants entitled to remove any suit mentioned in the next preceding section," that is to say, § 2 of the act of 1875, "shall desire to remove such suit," he shall petition and give security in the manner and form therein prescribed. Clearly, then, this section relates only to removals provided

Digitized by Google

for in that act, and as sub-section 3 of § 639 remains in force, because the cases there provided for are not included among those mentioned in the act of 1875, it follows that the form and mode of proceeding to secure a removal under the sub-section will be sufficient if they conform to the requirements of the other parts of the section. That section as it now stands unrepealed is complete in itself, and furnishes its own machinery to effect a removal of all cases which come within its operation. The security is as much governed by the remainder of the section as the time for filing the petition; and as to that, it was distinctly held in *Hess* v. *Reynolds*, *supra*, that the petition was in time if presented before the final trial, even though it was after the term at which the cause could have been first tried, which would be too late if § 3 of the act of 1875 was applicable to this class of cases. As to this the court said in that case: "We are of opinion that this clause of § 639 remains, and is complete in itself, furnishing its own peculiar cause of removal, and prescribing, for reasons appropriate to it, the time within which it must be done."

It is true this suit is between citizens of different States, and as such it is mentioned in § 2 of the act of 1875; but the fair meaning of § 3 is that the suit must be one that is removable simply for the reason that it is one of a class such as is mentioned in § 2. Some cases in the circuit courts have been ruled the other way, and the decision of the Supreme Court of Ohio was put largely on their authority; but they were all decided before *Hess* v. *Reynolds*, *supra*, in this court, and that case, as we think, substantially covers this.

The judgment of the Supreme Court of Ohio is reversed, and the cause remanded for further proceedings in accordance with this opinion.

Digitized by Google

PEPER v. FORDYCE.

APPEAL FROM THE CIRCUIT COURT OF THE UNITED STATES FOR THE EASTERN DISTRICT OF ARKANSAS.

Argued November 17, 1886. — Decided December 13, 1886.

If the jurisdiction of the Circuit Court of the United States does not appear on the face of the record, in some form, the decree is erroneous and must be reversed.

A, a citizen of Arkansas, conveyed to B, a citizen of the same State, real estate in Arkansas, in trust to secure the payment of notes due to C, a citizen of Missouri, with power of sale in case of non-payment. Subsequently A became insolvent and assigned his property to D, a citizen of Arkansas, in trust for the benefit of his creditors. *Held*, that, in proceedings in equity commenced by D to determine the amount of indebtedness from A to C, and to prevent the sale of the trust property by B, and to obtain a cancellation of the conveyance to B on payment of the amount found due to C, B was a necessary party, with interests adverse to D; and as both were citizens of the same State, and as the jurisdiction of the Circuit Court depended alone upon the citizenship of the parties, it was without jurisdiction. *Thayer* v. *Life Association of America*, 112 U. S. 117, affirmed.

When a decree or judgment of a Circuit Court is reversed for want of jurisdiction in that court, this court will make such order in respect to the costs of appeal as justice and right may seem to require. *Mansfield, &c., Railway* v. *Swann*, 111 U. S. 379, and *Hancock* v. *Holbrook*, 112 U. S. 229, followed.

From the record in this case it appeared that on the 10th of January, 1881, Walter A. Moore, a citizen of Arkansas, conveyed to George G. Latta, a citizen of the same State, certain property in the city of Hot Springs, in trust to secure the payment of three notes for the sum of $2433.46 each, payable to the order of Charles G. Peper, under the name of Charles G. Peper & Co., a citizen of Missouri, with power of sale in case of non-payment. After the execution of this conveyance Moore became insolvent, and assigned his property to Samuel W. Fordyce, a citizen of Arkansas, for the benefit of his creditors. On the 11th of June, 1881, Fordyce as such assignee, at the instance of the creditors of Moore and in their behalf,

Digitized by Google

began a suit in equity in the Circuit Court of the United States for the Eastern District of Arkansas against Peper and Latta, the object and purpose of which was to prevent a sale of the property under the deed to Latta, and for an account of certain transactions between Peper and Moore connected with the notes which had been secured, with a view to the cancellation of the debt, or at least its payment after the exact amount due should be determined. In the bill it appeared that both Fordyce and Latta were citizens of Arkansas, and that Peper was a citizen of Missouri. To this bill Peper and Latta filed a joint answer.

Afterwards, on the 31st of October, 1881, Fordyce, as assignee, and Moore began another suit against Peper and Latta in the Circuit Court of Garland County, Arkansas, the object of which was also to enjoin Peper and Latta from selling the property under the deed to Latta, and to obtain a cancellation of the conveyance. Immediately on the filing of this bill, a preliminary injunction was granted as prayed. On the same day, Peper and Latta filed a petition for the removal of this last suit to the Circuit Court of the United States for the Eastern District of Arkansas, on the ground that "there is a controversy in this suit between citizens of different States, and which can be fully determined between them." In their petition it was stated in express terms that Latta, Fordyce, and Moore were all citizens of Arkansas, and Peper a citizen of Missouri. This cause was entered in due form in the Circuit Court of the United States on the 14th of November, 1881, and on the 21st of the same month Peper and Latta filed in that court a joint answer to the bill which had been filed in the State court, and on which the injunction had been granted. On the 20th of December, 1881, the two causes thus in the Circuit Court of the United States were there consolidated on motion of Fordyce, and an order made "that the two causes be tried as one suit under the title" of the cause originally begun in that court.

On the 10th of June, 1882, Peper and Latta filed a cross-bill in which they prayed a foreclosure and sale of the trust property. To this cross-bill an answer was filed by Fordyce and

Digitized by Google

Moore, setting up substantially the same defences as were shown in the bill of Fordyce in the Circuit Court of the United States, and to this a replication was filed by Peper and Latta. Testimony was taken, and on the final hearing of the cause a decree was entered dismissing the cross-bill and directing a cancellation of the deed of trust. From that decree Peper and Latta took this appeal.

Mr. Henry Hitchcock for appellants.

Mr. Eben W. Kimball (*Mr. George W. Murphy* was with him) submitted on their brief.

Mr. Chief Justice Waite, after stating the case, delivered the opinion of the court.

The first objection now made to the decree is, that the Circuit Court had no jurisdiction, either of the suit originally begun in that court, or of that removed from the State court. If the jurisdiction does not appear on the face of the record in some form, the decree is erroneous and must be reversed. That was decided at the present term in *Continental Life Ins. Co.* v. *Rhoads*, ante, 237, to which reference is made for the authorities.

The jurisdiction in this case depends alone on the citizenship of the parties; and in the suits as originally begun, and on their consolidation in the Circuit Court, Latta, one of the defendants, is, and was at the commencement of the actions, a citizen of the same State with the plaintiffs. This is fatal to the jurisdiction, because Latta was an indispensable party adverse in interest to the plaintiffs, and there was no separable controversy between the plaintiffs and Peper which would authorize the removal of the suit begun in the State court on that account. This was expressly decided in *Thayer* v. *Life Association of America*, 112 U. S. 717, a case which cannot be distinguished from this. It follows, therefore, that the decree must be reversed.

It only remains to consider the question of costs; for in *Mansfield, Coldwater & Lake Michigan Railway Co.* v. *Swann*,

Digitized by Google

111 U. S. 379, and *Hancock* v. *Holbrook*, 112 U. S. 229, it was held that, upon a reversal for want of jurisdiction in the Circuit Court, this court may make such order in respect to the costs of the appeal as justice and right shall seem to require. Here the error is attributable equally to both the parties. Fordyce sued originally in the Circuit Court, when, upon the face of his bill, it appeared there was no jurisdiction. Without discontinuing that suit he sued again in the State court upon what was substantially the same cause of action, and to obtain substantially the same relief. This suit Peper and Latta caused to be removed to the Circuit Court, and in their petition set forth a state of facts which showed that the case was not removable. The cause was then entered in the Circuit Court, and an answer and a cross-bill filed by Peper and Latta without any attempt on the part of Fordyce or Moore to have the suit remanded, and without even calling the attention of the court to the question of jurisdiction. On the contrary, after the answer and before the cross-bill, Fordyce moved for and obtained an order that the two cases — that which he had brought in the Circuit Court of the United States and that which Peper and Latta had removed there — be heard as one under the title of his own suit in that court. The cases then proceeded, without objection by either party, until after a final decree below and an appeal by Peper and Latta to this court. Under these circumstances, we order that the costs of this court be divided equally between the parties, each paying half.

The decree of the Circuit Court is reversed for want of jurisdiction in the Circuit Court, and the cause remanded, with instructions to dismiss the bill filed originally in that court by Fordyce against Peper and Latta, without prejudice, and to remand the suit removed from the State Court, each party to pay his own costs in the Circuit Court.

Digitized by Google

GERMANIA INSURANCE COMPANY v. WISCONSIN.

ERROR TO THE CIRCUIT COURT OF THE UNITED STATES FOR THE WESTERN DISTRICT OF WISCONSIN.

Submitted November 23, 1886. — Decided December 13, 1886.

A suit by a State in one of its own courts cannot be removed to a Federal court under the act of 1875, unless it be a suit arising under the Constitution or laws of the United States, or treaties made under their authority. *Ames* v *Kansas*, 111 U. S. 449, affirmed.

A suit cannot be said to be one arising under the Constitution or laws of the United States until it has in some way been made to appear on the face of the record that "some title, right, privilege, or immunity, on which the recovery depends, will be defeated by one construction of the Constitution or a law of the United States, or sustained by an opposite construction." *Starin* v. *New York*, 115 U. S. 248, affirmed.

An insurance company of New Orleans was summoned into a State court of Wisconsin by the State in order to recover from it statutory penalties for doing business in the State without complying with its laws. Service of process was made on A, a citizen of Wisconsin who was described in the sheriff's return as "being then and there an agent" of the company. The company made a special appearance and moved to vacate all proceedings for want of jurisdiction, and filed in support of it affidavits to the effect that A was never its agent, and that it had no agent in the State and had had none for ten years then last past: *Held*, That this issue was a mixed question of law and fact, in no way dependent upon the construction of the Constitution or any law of the United States, and as the complaint disclosed no reason for the removal of the cause to a Federal court, it was not removable.

This was a writ of error brought under § 5 of the act of March 3, 1875, c. 137, 18 Stat. 470, for the review of an order of the Circuit Court remanding a suit which had been entered in that court as a suit removed from a State court. The record showed a suit brought by the State of Wisconsin, in one of its own courts, against the Germania Insurance Company of New Orleans, an insurance company incorporated by the State of Louisiana, and having its principal office and place of business in New Orleans, to recover certain statutory penalties for doing business in Wisconsin without complying

Digitized by Google

with the laws of that State in reference to foreign insurance companies. The only process in the cause was served, December 29, 1885, on L. D. Harmon, a citizen of Wisconsin, and described in the sheriff's return as "being then and there an agent of the said defendant."

On the 12th of April, 1886, the insurance company came, and, entering "its special appearance in the action . . . for the purpose of this motion only," moved the court "to vacate and set aside the pretended service of summons" as above stated, "and all and every proceeding in said action subsequent thereto, for want of jurisdiction, and irregularity in said pretended service of process." In support of this motion an affidavit of the vice-president and of the secretary of the company was filed, to the effect that Harmon was never the agent of the company, and that the company had no agent in the State, and had had no agent, and had not transacted insurance business there for ten years then last past. Before any action was had upon this motion, the company, on the same 12th of April, presented to the court its petition for the removal of the suit to the Circuit Court of the United States for the Eastern District of Wisconsin, in which was set forth the motion to set aside the service of the summons in the action and the special appearance of the company for the purposes of that motion only, and the grounds of the motion. The petition then stated, "that the suit arises out of a controversy between the parties in regard to the operation and effect of certain provisions of the laws of the State of Wisconsin, said to be in conflict with the Constitution of the United States in various particulars, and necessitating a construction thereof, among which subjects of controversy are the following, to wit:

"Whether the attempt of the State to prevent the company from doing business in the way it was done was not in conflict with § 1, Art. 14, and with § 8, Art. 1, of the Constitution; and

"Whether the aforesaid proceedings in said court, and the attempt to proceed against your petitioner by service of summons or process upon one not authorized to represent it, with-

Digitized by Google

out appearance in court, constitutes 'due process of law' within the meaning of the Constitution of the United States."

The State court refused to allow a removal, and thereupon the company took a copy of the record to the Circuit Court, where proceedings were had on the 29th of May in accordance with the following docket entry:

"The State of Wisconsin
v.
The Germania Insurance Company of New Orleans.

"And comes the defendant, specially appearing by Cotzhausen, Sylvester, Scheiber & Sloan, for purposes of pending motion only, and moves the court for an order docketing this cause, which motion was granted *ex parte;* and the defendant, appearing specially for the purposes of this pending motion, gives notice that on the 7th day of June, A.D. 1886, at the opening of court on that day, or as soon thereafter as counsel can be heard," the plaintiff will be required to show cause "why the pending motion to set aside the pretended service of summons and all subsequent proceedings in said cause should not be taken up, heard, and considered."

On the 24th of June the Circuit Court remanded the cause, whereupon this writ of error was sued out.

Mr. F. W. Cotzhausen for plaintiff in error.

Mr. H. W. Chynoweth for defendant in error.

MR. CHIEF JUSTICE WAITE, after stating the case, delivered the opinion of the court.

A suit by a State in one of its own courts cannot be removed to a Circuit Court of the United States under the act of 1875, unless it be a suit arising under the Constitution or laws of the United States or treaties made under their authority, *Ames* v. *Kansas*, 111 U. S. 449; and a suit cannot be said to be one arising under the Constitution or laws of the United States until it has in some way been made to appear on the face of the record that "some title, right, privilege, or immu-

Digitized by Google

nity, on which the recovery depends, will be defeated by one construction of the Constitution or a law of the United States, or sustained by an opposite construction." *Starin* v. *New York*, 115 U. S. 248, 257. This record shows no such thing, for, as the case now stands, the right of recovery depends alone on the question whether service of summons has been made on a person who was at the time an agent of the company within the State on whom process might legally be served, so as to bind the company and bring it within the jurisdiction of the court. This is a mixed question of law and fact, and in no way dependent on the construction of the Constitution or any law of the United States. If decided in one way, the suit will be at an end and the company relieved from all necessity of appearing to defend. If in another, the company must appear or suffer the consequences of a default. As yet no suit arising under the Constitution or laws of the United States has been *brought*, within the meaning of that term as used in the statute. There is nothing in the complaint which discloses any such case, and, until the company submits itself to the jurisdiction of the court for the trial of the suit, it cannot be permitted to allege any new matter. All further proceedings have been stopped by the company on its own motion until it can be determined whether any suit at all has in law been begun so as to require the company to appear and defend. The case stands, therefore, on the summons, the alleged service, the complaint, the special appearance of the company for the purposes of its motion to vacate the service, and the petition for removal, which must be limited in its statements to such as are consistent with the special appearance which has been entered. No new matter in the nature of a defence to the action can be introduced. The only question which can be considered in the case as it now stands is whether Harmon, on whom this process was served, was in fact an "authorized agent." The suit, therefore, does not, as yet, "really and substantially involve a dispute or controversy properly within the jurisdiction of the Circuit Court," and it was properly remanded.

The order to that effect is consequently

Affirmed.

Digitized by Google

People's Insurance Company v. *Wisconsin*. Error to the Circuit Court of the United States for the Eastern District of Wisconsin. The cause was submitted with *Germania Insurance Co.* v. *Wisconsin*, by the same counsel. MR. CHIEF JUSTICE WAITE delivered the opinion of the court. The material facts in this case are substantially like those in *Germania Insurance Co.* v. *Wisconsin*, just decided, and the questions for determination are the same. The order remanding the suit is affirmed on that authority.

Affirmed.

UNITED STATES v. JONES.

APPEAL FROM THE COURT OF CLAIMS.

Submitted December 6, 1886. — Decided December 13, 1886.

In the exercise of its general jurisdiction appeals lie to this court from judgments of the Court of Claims.

An appeal from a judgment of the Court of Claims, taken before the right of appeal has expired, is not vacated by the appropriation by Congress of the amount necessary to pay the judgment.

This was a motion to dismiss. The case is stated in the opinion of the court.

Mr. John Paul Jones, in person, for the motion.

Mr. Attorney General and *Mr. Heber J. May*, *Assistant Attorney*, opposing.

MR. CHIEF JUSTICE WAITE delivered the opinion of the court.

The grounds of this motion are:

1. That under the law as it now stands no appeal lies from a judgment of the Court of Claims to this court; and,

2. That since the appeal was taken Congress has appropriated the amount necessary to pay the judgment.

The case of *Gordon* v. *United States*, 2 Wall. 561, holding that no appeal would lie from a judgment of the Court of Claims to this court, was announced March 10, 1865. The

Digitized by Google

cause was originally submitted on the 18th of December, 1863, and on the 10th of April, 1864, it was ordered for argument on the second day of the next term. Chief Justice Taney died October 12, 1864, and the case was not reargued under the special order of the previous term until January 3, 1865. Consequently, the opinion published as an appendix to 117 U. S. 697 must have been prepared by him before the decision was actually made. The records of the court show that in announcing the judgment Chief Justice Chase said: "We think that the authority given to the head of an Executive Department by necessary implication in the 14th section of the amended Court of Claims Act, to revise all the decisions of that court requiring payment of money, denies to it the judicial power, from the exercise of which alone appeals can be taken to this court. The reasons which necessitate this conclusion may be more fully announced hereafter. At present, we restrict ourselves to this general statement, and to the direction that the cause be dismissed for want of jurisdiction." This differs somewhat from the case as reported by Mr. Wallace, and shows precisely the ground of the opinion, to wit, the special provisions of § 14. That section was as follows:

"SEC. 14. That no money shall be paid out of the Treasury for any claim passed on by the Court of Claims till after an appropriation therefor shall have been estimated for by the Secretary of the Treasury."

At the next session of Congress after this decision the objectionable section was repealed by the act of March 17, 1866, c. 19, 14 Stat. 9, and the Court of Claims was directed to transmit, at the end of every term, a copy of its decisions to the heads of departments and certain other officers specially mentioned. From that time until the presentation of this motion it has never been doubted that appeals would lie. Indeed, immediately after the repealing act went into effect, and before the adjournment of the term then being held, a set of rules regulating such appeals was promulgated by this court, and it is safe to say that there has never been a term since in which many cases of the kind have not been heard

Digitized by Google

and decided without objection from any one. At December Term, 1866, in *De Groot* v. *United States*, 5 Wall. 419, 427, the new rules were referred to and explained; and at the next term, in December, 1867, in *United States* v. *Alire*, 6 Wall. 573, 576, a case which could not be entertained on a general appeal, was sent back in order that a special appeal might be allowed of which this court could take jurisdiction. In delivering the opinion, Mr. Justice Nelson, who was with the majority when *Gordon's Case* was decided, after referring to that case as denying the jurisdiction of this court "on account of the power of the Executive Department over its judgment by the 14th section of the act of 1863," said "that section was repealed by the first section of the act of March 17th, 1866." So, too, in *United States* v. *O'Grady*, 22 Wall. 641, Mr. Justice Clifford, who also concurred in the judgment in *Gordon's Case*, said, for the court: "The Supreme Court declined to take jurisdiction of such appeals chiefly for the reason that the act practically subjected the judgments of the Supreme Court rendered in such cases to the re-examination and revision of the Secretary of the Treasury;" but, he added, "subsequently Congress repealed the provision conferring that authority upon the Secretary of the Treasury, and since that time no doubt has been entertained that it is proper that the Supreme Court should exercise jurisdiction of appeals in such cases." This case was decided at October Term, 1874, and afterwards, at October Term, 1879, in *Langford* v. *United States*, 101 U. S. 341, 344, 345, Mr. Justice Miller, who dissented from the judgment in *Gordon's Case*, after referring to that case and the grounds of its decision, said: "An act of Congress removing this objectionable feature having passed the year after that decision, this appellate power of this court has been exercised ever since." It is manifest, therefore, not only that the jurisdiction was originally denied solely on the ground of the objectionable 14th section, but that, with this section repealed, nothing has ever been supposed until now to stand in the way of our taking cognizance of such cases.

Reference is now made in argument to § 236 of the Revised Statutes, which provides that all claims and demands against

Digitized by Google

the United States shall be settled and adjusted in the Department of the Treasury, and it is claimed that this is the equivalent of the objectionable 14th section as a bar to our jurisdiction. This section of the Revised Statutes is not new law. It was first enacted as § 2 of the act of March 3, 1817, c. 45, 3 Stat. 366, and it has been in force ever since. It evidently relates to an entirely different class of duties from that to which the payment of the judgments of the Court of Claims belongs. As to such judgments, the duty of the Secretary of the Treasury is to pay them out of "any general appropriation made by law for the payment and satisfaction of private claims, on presentation" to him "of a copy of said judgment, certified" according to law. Rev. Stat. § 1089. Of course this applies as well to special appropriations made for the satisfaction of the particular judgment. Under this statute the Secretary has no power whatever to go behind the judgment in his examination.

Reference is also made to an act of March 3, 1875, c. 149, 18 Stat. 481, which provides for "deducting any debt due the United States from any judgment recovered against the United States by such debtor;" but this gives the accounting officers of the government no authority to reëxamine the judgment. It only provides a way of payment and satisfaction if the creditor shall, at the time of the presentation of his judgment, be a debtor of the United States for anything except what is included in the judgment, which is conclusive as to everything it embraces.

It is unnecessary to pursue this branch of the case further. We are entirely satisfied that, as the law now stands, appeals do lie to this court from the judgments of the Court of Claims in the exercise of its general jurisdiction.

As to the second ground of the motion, it is sufficient to say, that it is expressly provided, in the act making the appropriation referred to, "that none of the judgments herein provided for shall be paid before the right of appeal shall have expired." 24 Stat. 282. As this appeal was taken in time, the appropriation is not applicable to the payment of the judgment, at least until the case has been disposed of here.

The motion to dismiss is denied.

Digitized by Google

GREENWICH INSURANCE CO. v. PROVIDENCE AND STONINGTON STEAMSHIP CO.

ERROR TO THE CIRCUIT COURT OF THE UNITED STATES FOR THE SOUTHERN DISTRICT OF NEW YORK.

Submitted November 8, 1886. — Decided December 20, 1886.

A policy of marine insurance was effected April 5th for a term of six months, with this agreement written in the margin: "This policy to continue in force from the date of expiration until notice is given this Company of its discontinuance, the assured to pay for such privilege *pro rata* for the time used." On the 9th October following the assured sent to the insurer a check for $66.67 with a letter stating that it was "one monthly premium from Oct. 5 to Nov. 5" on the insurance "as specified in the policy." No other notice was given to the insurer before the loss which happened November 6th: *Held*, That the payment was not notice to discontinue the policy, nor an election to have it continued in force for the additional month and no longer, but that the policy continued in force by its own terms until the assured should give notice of its discontinuance.

This was an action on a policy of marine insurance. Judgment below for plaintiff. Defendant sued out this writ of error. The case is stated in the opinion of the court.

Mr. William Allen Butler for plaintiff in error. *Mr. T. E. Stillman* and *Mr. Thomas H. Hubbard* were with him on the brief.

Mr. Wheeler H. Peckham for defendant in error.

Mr. Justice Bradley delivered the opinion of the court.

This was an action on a policy of insurance, brought by the defendant against the plaintiff in error, to recover for the loss of the steamboat Rhode Island. It appeared on the trial that, on the 5th of April, 1880, the Providence and Stonington Steamship Company effected with the Greenwich Insurance Company a policy of marine insurance, numbered 2661, for $10,000, upon the Rhode Island, for the term of six months from date, with an agreement written in the margin as follows:

Digitized by Google

"This policy to continue in force from the date of expiration until notice is given this company of its discontinuance, the assured to pay for such privilege *pro rata* for the time used." The policy having been given in evidence, it was thereupon admitted by defendant's counsel that the steamer Rhode Island named in the policy was lost by a peril of the sea by running ashore on Bonnett's Point, in Narragansett Bay, November 6th, 1880, and thereby suffered damage beyond the amount of the insurance, and that the plaintiff thereafter gave due notice and proof of the loss and interest. The amount of the insurance money and interest to the date of trial was thereupon proved to be the sum of $11,338.18.

The defendant's counsel then gave in evidence a letter written on behalf of the plaintiff to and received by the defendant on the day it bore date, which was as follows, to wit:

"Providence & Stonington Steamship Co., Treasurer's Office,
"New York, Oct. 9, 1880.

"*The Greenwich Ins. Co., New York.*

"Gents: Herewith please find our check for sixty-six $\frac{67}{100}$ dolls., being one monthly premium, from Oct. 5 to Nov. 5, '80, on insurance on strs. Massachusetts & Rhode Island, as specified in your policies Nos. 2661 & 2662.

"Yours resp'y, C. G. Babcock, *Treas.*"

Plaintiff's counsel admitted that the letter was accompanied by the check of the plaintiff for $66.66, and that no other or further notice was given by the plaintiff to the defendant before the happening of the loss. The evidence being closed, the defendant's counsel prayed the court to rule and decide:

First. That the privilege written on the margin of the policy was wholly for the benefit of the assured, and gave them the option of continuing the policy in force after the date of expiration named in it without doing any act or thing; that the only notice or act on the part of the assured called for by the privilege was notice of the time of discontinuance whenever the assured should elect to give such notice, and make payment for the time used under the privilege.

Digitized by Google

Second. That in the absence of any such act or notice on the part of the assured the policy and the risk continued from day to day under the terms of the privilege.

Third. That it was competent for plaintiff to make the time, which was left indefinite and uncertain by the terms of the privilege, definite and certain, and to fix the time to be used under the privilege by proper notice or act for that purpose.

Fourth. That the act of the plaintiff, on October 9th, 1880, after date of expiration of the policy had passed, and the policy was in force under the privilege only, in paying one month's premium, and specifying the period of one month, beginning October 5th, 1880, and ending November 5th, 1880, as the time for which payment was made, was in law an election to continue the risk in force for that month, and that the legal effect of the transaction was to continue the policy in force until November 5th, at noon, and no longer.

And thereupon defendant's counsel prayed the court to direct a verdict for the defendant. This was refused, and the court directed the jury to find a verdict for the plaintiff.

This is the whole case; and the only question is, whether the sending of the check for an additional month's insurance was, in legal effect, a notice of the discontinuance of the policy after that time. The agreement written in the margin of the policy was, that the policy should continue in force from the date of its expiration until notice was given to the insurance company of its discontinuance, the assured to pay for such privilege *pro rata* for the time used. It did not specify when, or how often, such *pro rata* payments should be made. The plaintiff might have waited a year before making a payment, unless the insurance company had demanded an earlier payment. The plaintiff elected to make a monthly payment, and made it. It seems to us very clear that the mere making of such a payment was not, and did not amount to, a notice to discontinue the policy, or an election to have it continued in force for the month for which the payment was made, and no longer. The plan adopted by the plaintiff, to pay from month to month, was a reasonable one and favorable to the insurance company. It would have been a less favorable one

Digitized by Google

to have deferred any payment longer, and a more favorable one to have paid for a longer time, when it did make a payment. But in whatever manner it chose to arrange its payments, it did not affect the terms of the policy. That continued in force by the terms of it, until the plaintiff gave notice of its discontinuance. To say that a mere payment for a specified time would amount in law to such a notice, would make it dangerous for them to make any payment at all until they met with a loss. Even if in making a payment they should make an express stipulation or proviso, that it was not intended as a notice of discontinuance, such a stipulation would be of no avail, if the defendant is right in the position it takes. This, we think, would be an unreasonable construction of the contract and of the acts of the assured done in pursuance of it.

We cannot say that such a contract is a desirable one for insurers to make. Ordinarily, on an insurance for a specified time or adventure, such as a year for example, or a voyage, they get their premium in advance for the risk of the whole period or adventure; and if a loss happen ever so soon after the insurance is effected, no abatement of the premium is made. This gives them the benefit of average losses in determinate times or adventures, which is the solid basis on which all insurance rests. But the insurance company saw fit to make the contract in the form it did; and having made it, it is bound by its terms. And, according to that contract, we think that it continued to be liable for a loss, although it happened after the time covered by the premiums already paid, the assured being only liable to pay *pro rata* for the time used, and not yet paid for.

The judgment of the Circuit Court is affirmed.

Digitized by Google

WOLVERTON v. NICHOLS.

ERROR TO THE SUPREME COURT OF THE TERRITORY OF MONTANA.

Argued November 30, 1886. — Decided December 20, 1886.

A having applied for a patent for a placer mine in Montana, B filed an adverse claim in the register's office under the provisions of Rev. Stat. § 2325, and commenced suit for the settlement of the controversy in the District Court of the Territory according to the provisions of Rev. Stat. § 2326. In the course of the trial, it appeared that, before the commencement of the suit, B had agreed with C, by a sufficient instrument under seal, to convey the premises in dispute to C "by good and sufficient deed of conveyance duly acknowledged," and that C was in possession when the suit was begun and still remained in possession. The Code of Montana provides that "an action may be brought by any person in possession, by himself or his tenant of real property, against any person who claims an estate or interest therein adverse to him, for the purpose of determining such adverse claim, estate, or interest." The court ordered a nonsuit, which judgment was affirmed by the Supreme Court of the Territory. This court reverses the judgment of the Supreme Court, and holds that as C was holding under B, and as B was bound to C to have the title quieted, B had a right to have the verdict of the jury on the questions of fact at issue so as to settle the question which the Act of Congress required to be settled.

This was a suit instituted under the provisions of §§ 2325, 2326, Rev. Stat. to determine adverse claims to mineral lands. The case is stated in the opinion of the court.

Mr. Edward O. Wolcott for plaintiffs in error, submitted on his brief.

Mr. William Herbert Smith and *Mr. Walter H. Smith* (*Mr. F. C. Ford* was with them on the brief) for defendants in error.

Mr. Justice Miller delivered the opinion of the court.

This is a writ of error to the Supreme Court of the Territory of Montana. The suit was brought in the District Court of that Territory to settle the controverted right to a patent from

Digitized by Google

the United States for a placer mine, under §§ 2325 and 2326 of the Revised Statutes of the United States. It is therein enacted that a person who has located and set up a claim for mineral lands, and who desires to get a patent for it, shall file in the proper land office an application for such patent, showing a compliance with the laws on that subject, and a plat and field-notes of the claim, and shall post a copy of such plat, with a notice of the application for the patent, in a conspicuous place on the land, for sixty days. If no adverse claim for the same is filed with the register within sixty days from this publication, and if the papers are otherwise in proper form, the patent shall issue; but where an adverse claim is filed during the period of publication, it shall be upon oath of the person making the same, showing the nature, boundaries, and extent of his claim, and "it shall be the duty of the adverse claimant, within thirty days after filing his claim, to commence proceedings in a court of competent jurisdiction, to determine the question of the right of possession, and prosecute the same with reasonable diligence to final judgment."

In the case before us the defendants, Nichols and Fuller, having made their application for a patent for a placer mine, the plaintiffs in error, the widow and heirs of Nelson Wolverton, filed the requisite claim in the register's office, adverse to that of Nichols and Fuller, in due time, and afterwards, in compliance with the act of Congress, instituted the present suit in the District Court of Montana to determine the right of possession. Upon the trial of this case before a jury, the plaintiff made what appears to be satisfactory proof that Nelson Wolverton had in his lifetime taken the necessary steps to establish his claim to the mine, or to that part of it now in contest, and had been dead about two years when these proceedings were commenced. In the course of the production of the plaintiffs' evidence it was developed by cross-examination that Mrs. Wolverton, acting for herself and as guardian of the two children of her deceased husband, had executed and delivered the following instrument:

"Know all men by these presents, that I, Margaret J. Wolverton, widow of Nelson Wolverton, deceased, for myself, and

Digitized by Google

as guardian for Eva Jane Wolverton and William Arthur Wolverton, infants under the age of twenty-one years, for and in consideration of the sum of one dollar to me in hand paid by the Colorado and Montana Smelting Company, and the farther consideration of said company prosecuting to a successful conclusion the cause of J. R. Clark, administrator of the estate of Nelson Wolverton, deceased, et al. *v.* Silas F. King, now pending in the District Court in and for Silver Bow County, have covenanted and agreed, and by these presents do covenant and agree, to convey, by a good and sufficient deed of conveyance, duly acknowledged, all that certain land bounded and described as follows: Beginning at a point on the easterly extremity of certain placer mining claims belonging to the estate of the said Nelson Wolverton, and located in Independence Mining District, Silver Bow County, Territory of Montana, in Township No. 3 North, Range No. 8 West of the principal meridian, which said point is due east from the most southerly point of a certain fence running westerly therefrom along the general course of said Silver Bow Creek; thence in a due west line from said point, touching the most southerly point of said fence, a distance of about thirteen hundred feet, to a point on the westerly extremity of placer mining claim number two hundred and thirty; thence from said point due south along the westerly boundary of said last-named placer claim to the most southerly boundary thereof; thence along the most southerly boundary of said placer mining claim, and placer mining claims numbers 231, 232, 233, 234, 235, 236, 237, 238, 239, 240, 241, and 242, in an easterly direction, to the southeast corner of said placer mining claim number two hundred and forty-two; thence in a northerly direction from said corner to the point or place of beginning; it being intended to convey all that part of said placer mining claims numbered from two hundred and thirty to two hundred and forty-two, both inclusive, which lies south of the most southerly point of the fence first above mentioned: To have and to hold the same unto the said The Colorado and Montana Smelting Company, their successors and assigns, for their own benefit and behoof forever.

Digitized by Google

"In witness whereof I have hereunto placed my hand and seal this 12th day of May, eighteen hundred and eighty-one.

"MARGARET J. WOLVERTON. [SEAL.]
"MARGARET J. WOLVERTON, [SEAL.]

"*As guardian for Eva Jane Wolverton and William Arthur Wolverton.*

"In presence of CALEB E. IRVINE."

It was proved that the Colorado and Montana Smelting Company, who had held this property for two years under a lease, or as tenants of the Wolvertons, were now in the actual control and possession of the property mentioned in this instrument. An attempt was also made to show that they had performed the condition mentioned in it, and were entitled to the conveyance which that instrument provided should be made when this was done. Thereupon, at the suggestion of defendant's counsel, the court ordered a nonsuit. This judgment was affirmed in the Supreme Court of the Territory, and is the subject of consideration here.

The ground upon which this nonsuit was ordered is that the plaintiffs were not in the actual possession of the property at the time of the trial, and that under the Statute of Montana, § 354 of the Code of Civil Procedure, this was an absolute necessity to the successful prosecution of this action. That section is in the following words:

"An action may be brought by any person in possession, by himself or his tenant, of real property, against any person who claims an estate or interest therein adverse to him, for the purpose of determining such adverse claim, estate, or interest."

But whatever may be the effect of that statute in an ordinary action which has no direct relation to the proceedings under the act of Congress which we have referred to, we are of opinion that, as applicable to such a case, the construction given by the court is entirely too restricted. The proceedings in this case commenced by the assertion of the defendants' claim to have a patent issue to them for the land in controversy. The next step was the filing of an adverse claim by

Digitized by Google

the plaintiffs in the land office, and the present suit is but a continuation of those proceedings, prescribed by the laws of the United States, to have a determination of the question as to which of the contesting parties is entitled to the patent. The act of Congress requires that the certified copy of the judgment of the court shall be filed in the land office and shall be there conclusive. And we must keep this main purpose of the action in view in any decision made with regard to the rights of the parties.

It appears from the evidence that at the time these proceedings took place in the land office the smelting company was in possession as the tenant of the Wolvertons, and that the contract by which Mrs. Wolverton undertook, upon certain conditions, to convey all the right of the Wolverton heirs to the smelting company, was made after the commencement of those proceedings. It might very well be maintained that, having thus commenced such proceedings, at a time when the possession was in the Wolvertons, they could be conducted to a termination in their name. But, however that may be, it is quite clear, upon the testimony before us, that Mrs. Wolverton had not completely parted with her interest and that of her children in the land in controversy at the time of the trial. The language of the instrument, by which this is supposed to have been done, is that she will thereafter convey the lands described. This conveyance has never been made. The whole thing rests in promise or covenant to do it in the future. This covenant also is that it shall be done by a good and sufficient deed of conveyance. These words have always been held to mean a conveyance of a good title, and though in point of fact the legal title was in the United States, as it is yet, still the parties understood very well that they were dealing with regard to a class of claims which the United States, by statute and otherwise, had always recognized, and the meaning of the covenant was that she should convey such an interest in the property as would enable the other parties, if they chose, to obtain the patent from the government. She, therefore, was interested to defeat the claim of the defendants, who were seeking to get that patent; it was her duty and her interest to

Digitized by Google

contest their claim and have the right to the patent decided in favor of the claims which she set up as being derived from her late husband. This was necessary to enable her to make that "good and sufficient conveyance" which this covenant required, and which had never been made, and if she had stood by and permitted the defendants to obtain the patent from the United States she would have been unable to comply with her contract to convey a good and sufficient title to the smelting company. In fact, so far as regards the right of possession, which alone is in controversy in this suit, the interest, the claim, and the rights of the plaintiffs, the Wolvertons, and of the smelting company, are in privity with each other and are identical. And, inasmuch as this is a contest provided for by the statutes of the United States, in order that the officers of the land department may be informed which of the two contestants before it is entitled to the patent, we see no reason why the plaintiffs here should not have been permitted to have the verdict of a jury on that question in this suit. And, since such possession as the smelting company had was a part of and in subordination to the title of the Wolvertons, the judgment in this case between the parties to this suit would have settled the question which the act of Congress required to be settled. We are of opinion, therefore, that, so far as regards this, the main ground on which the court below directed a nonsuit, that court erred.

Something is said in the brief about the fact that the plaintiffs have failed to show that the possession of these parties conflicted. On that point it is sufficient to say that the plaintiffs, in their petition, asserted a claim to the southeast quarter of the southeast quarter of section 23, in Township 3 North, Range 8 West of the principal meridian of Montana, and that the defendants, in their answer, admit that they have applied for a patent for the same land exactly. If they did not desire to have the question of the right of possession to any part of these forty acres submitted to a jury on the ground that they did not claim it, they should have made a disclaimer. Apart from this, so far as relates to the evidence on the subject, we are of opinion that there was sufficient to go to the jury to

Digitized by Google

show that the plaintiffs' claim did include a part of that claimed by the defendants in this action.

For these reasons the judgment of the Supreme Court is reversed, and the case remanded for further proceedings.

GILBERT v. MOLINE PLOUGH COMPANY.

ERROR TO THE SUPREME COURT OF THE TERRITORY OF DAKOTA.

Argued December 3, 1886. — Decided December 20, 1886.

A, having received from B an order for goods, declined to comply with it on the ground that he was not sufficiently advised of B's responsibility. B thereupon procured from C a writing stating that C was acquainted with B, indorsed him as an honest, capable business man deserving of credit, and would satisfy all his orders that spring. B delivered this to A. A thereupon notified B that the guaranty was accepted and forwarded the goods. B having failed to pay his notes given for them, A sued on the letter of credit. C defended by setting up the original order given by B as part of and explanatory of the credit. The court below held that the letter of credit was complete and could not be changed by importing into it the previous order. This court sustain that ruling.

Whether a letter-press copy can always be introduced in place of the original, *quære.*

When the introduction of a letter in evidence is immaterial and works no prejudice to the objecting party, this court will not reverse a judgment for that cause only.

This was an action at law on a contract of guaranty. Judgment for the plaintiff, which was affirmed by the Supreme Court of the Territory.

The case is stated in the opinion of the court.

Mr. H. K. Whiton for plaintiff in error, submitted on his brief.

Mr. R. D. Mussey for defendant in error.

Mr. Justice Miller delivered the opinion of the court.

Digitized by Google

Opinion of the Court.

This is a writ of error to the Supreme Court of the Territory of Dakota. The action was brought by the Moline Plough Company, as plaintiff, against Herman Gilbert and Jacob Schartzel, defendants. It was tried before a jury, and verdict rendered for the plaintiff. This judgment, on appeal to the Supreme Court of the Territory, was affirmed. The suit was founded on the following instrument in writing, signed by the defendants:

"SIOUX FALLS, D.T., *March 9th*, 1878.

"*Moline Plough Co., Moline, Ill.*

"Sirs: We, the undersigned, are acquainted with Peter Gillman, of this place, (formerly of Fond Du Lac, Wis.,) and have no hesitation in indorsing him as an honest, capable business man and deserving of confidence and credit. We think your informant, in regard to Mr. Gillman's business ability and capacity, was in error, if not selfish and malicious. We will satisfy all orders Mr. Gillman gives this spring, such as ploughs and cultivators.

"WM. B. DICK.
"H. GILBERT.
"JACOB SCHARTZEL."

It seems that on January 21, 1878, Peter Gillman had sent an order to the Moline Plough Company requesting them to forward him certain goods in which they were dealing, and specifying the terms of payment, with which they declined to comply, on the ground that they were not sufficiently advised of his responsibility. After obtaining the above instrument, signed by the defendants, Gillman enclosed it to the Plough Company with the following letter:

"SIOUX FALLS, D.T., *March 9th*, 1878.

"*Moline Plough Co., Moline, Ill.*

"Sir: Will you accept my order under the recommend enclosed; if so, ship me the breakers as ordered; also the cultivators, and about 6 vibrating harrows. Hoping we will get better acquainted, I am sorry about such a report as stated

Digitized by Google

to you, and I know you will think so much more of me. (Too late in season for harrows.)

"I remain, yours, PETER GILLMAN.

"If you accept my order, please ship the goods at once, and oblige P. G."

The plaintiffs accepted the guaranty, notified Gillman that it was accepted, and forwarded the goods. The dealings between these parties under this guaranty continued during the spring; the last shipment being made about May 24, 1878. On July 28th following a settlement was made, and for the balance found due from Gillman to plaintiffs two notes were given, one payable September 15, 1878, and the other November 15, 1878.

An attempt was made by the defendants to show that credits were given in this transaction which released them from the liability of their letter of credit or guaranty. To establish this they insisted that the original order given by Gillman in January was to be taken as a part of or an explanation of their letter of credit. The court held that the letter of credit was complete within itself, and that the defendants could not import into it by parol any additional agreement as to the time and character of the credit to be given to Gillman, and instructed the jury to that effect. This is the principal error relied upon to reverse the judgment, which we think is no error.

The instrument sued on contains no reference to the previous letter of Gillman to the Plough Company, nor any restriction as to the terms on which they held themselves liable for his orders, except that they shall be given "this spring." The language used is, "We will satisfy all orders Mr. Gillman gives this spring, such as ploughs and cultivators." The letter from Gillman dated March 9th, referring to his previous order, is in fact a new order of that date, and evidently made under and in pursuance of the guaranty of the defendants. All the goods delivered to Gillman by the plaintiffs for which suit is now brought against the defendants were

Digitized by Google

delivered during that spring, and were delivered after the receipt of this guaranty. The court was right therefore in not permitting the defendants to explain or qualify that guaranty by the parol testimony which they offered. Nor do we see anything in the testimony, as found in the bill of exceptions, to discharge the defendants from the obligation incurred by the letter of credit, or guaranty, whichever it may be.

An error is assigned by the brief, on the admission in evidence on the part of the plaintiffs of a letter-press copy of a letter of the Moline Plough Company to Gillman, signed by Lobdell, the witness, on the part of that company. It is a reply to the letter received from Gillman of March 9, 1878, enclosing the guaranty, and reads as follows:

"PETER GILLMAN, Esq., Sioux Falls, D.T.

"Yours of the 9th is at hand, and satisfactory. We will ship your goods in a day or so, and hope they will arrive promptly. LOBDELL."

The objection was made that it was a letter-press copy and not the original. Without deciding whether a letter-press copy can always be introduced in place of the original, as is contended by the counsel for the defendant in error, it is sufficient to say that Lobdell, the witness, had previously testified, without objection, that he had acknowledged the receipt of the letter of guaranty and order by a letter to Gillman, in which he told him that the goods would be shipped in a few days. The introduction of this copy was, therefore, wholly immaterial. And even without such proof the acknowledgment of the letter of Gillman was unnecessary to fix the liability of the defendants, and could have worked no prejudice.

These are all the assignments of error worthy of attention, and the judgment of the Supreme Court is therefore

Affirmed.

Digitized by Google

BIGNALL v. GOULD.

ERROR TO THE CIRCUIT COURT OF THE UNITED STATES FOR THE EASTERN DISTRICT OF MISSOURI.

Submitted December 7, 1886. — Decided December 20, 1886.

In a bond "in the penal sum of $10,000, liquidated damages," with condition that certain third persons shall within a year release the obligee from a large number of debts held by them severally, and varying from $8000 to $10 each, the sum of $10,000 is a penalty, and not liquidated damages; and in an action thereon the obligee, upon proof that none of those debts were released by the holders within the year, but that immediately afterwards he was discharged from all of them in bankruptcy, can recover nominal damages only.

This was an action brought in September, 1881, by a citizen of Missouri against a citizen of New York upon the following bond, signed and sealed by the defendant:

"Know all men that I, James H. Gould, of Seneca Falls, New York, am held and firmly bound to Moses C. Bignall in the penal sum of ten thousand dollars lawful money, liquidated damages, to the payment of which I bind myself, my heirs, executors, administrators and assigns, firmly by these presents.

"Sealed with my seal at the city of St. Louis and State of Missouri this 7th day of April, A.D. 1879.

"The condition of this obligation is such that whereas on the 1st day of April, 1878, the said Moses C. Bignall became unable to pay and satisfy all his just debts and liabilities; and whereas the Gould Manufacturing Company, of Seneca Falls aforesaid, was one of the creditors of the said Moses C. Bignall; and whereas the said Gould Manufacturing Company, Mrs. Hannah B. Gould, of Seneca Falls, and Angus McDonald, of Rochester, New York, became the assignees by purchase of a large number and amount of the said debts and claims then existing against the said Moses C. Bignall; and whereas said last named parties, or either of them, may deem it to their interest to become the assignees of other of said debts and claims now existing against said Moses C. Bignall:

Digitized by Google

"Now, therefore, if the said Gould Manufacturing Company, the said Hannah B. Gould, and the said Angus McDonald, shall acquit, release and discharge the said Moses C. Bignall, within one year from the date hereof, of all and singular the debts and claims aforesaid, that have been assigned to them, or that may hereafter be assigned to them, or either of them, by good and sufficient release in writing, to be made by them, and to be delivered by them to said Moses C. Bignall, then this obligation to be void; otherwise, it shall remain in full force and virtue."

The petition alleged that the defendant executed the bond at its date; that the plaintiff was then owing to divers persons debts amounting to about $50,000, including one to the Gould Manufacturing Company of about $7000, and that Hannah B. Gould held assignments from different persons of many of those debts, to the amount of about $26,000 (a list of ten of which was annexed, varying from $147.23 to $8117.00), and Angus McDonald held assignments of like debts to the amount of about $6000 (a list of thirteen of which was annexed, varying from $9.80 to $1445.52); that there had been a breach of the bond, in that more than a year had elapsed since its execution, yet neither the Gould Manufacturing Company nor Gould nor McDonald had acquitted, released or discharged the plaintiff from any of those debts, and that by reason of this breach the plaintiff had been damaged in the sum of $10,000.

The answer admitted these allegations, except that it denied that the plaintiff had been damaged in the sum of $10,000 or any other sum; and alleged that the plaintiff, under proceedings in bankruptcy pending at the date of the bond, had since obtained a certificate of discharge, whereby all his debts mentioned in the petition were discharged. The plaintiff filed a replication, denying all the allegations of the answer.

Upon a trial by the court, a jury having duly been waived, the plaintiff proved that the assets which came to the hands of his assignee in bankruptcy amounted to $23,109.54, and no more, of which $17,439.11 was collected of the Gould Manufacturing Company, and that the only dividend paid was on March 14, 1882, of $46\frac{65}{100}$ cents on the dollar. The plaintiff

Digitized by Google

admitted in open court that he obtained a certificate of discharge on May 6, 1880, under proceedings in bankruptcy begun on April 25, 1878. The defendant relied on this admission, and introduced no evidence. No other testimony was given nor admissions made at the trial, save those contained in the pleadings.

The plaintiff asked the court to declare the following propositions of law as applicable to this case: "1st. The bond sued on is a liquidated bond, and the breach being admitted by the defendant, the plaintiff is entitled to recover the liquidated sum, $10,000; 2d. If the bond is not a liquidated bond, still, under the issues and the evidence, the plaintiff is entitled to recover more than nominal damages, notwithstanding his discharge in bankruptcy." The court refused thus to declare the law, and rendered judgment for the plaintiff, and assessed his damages at one cent only. The plaintiff excepted to the ruling and action of the court, and sued out this writ of error.

Mr. H. M. Pollard (with whom was *Mr. S. N. Taylor*), for plaintiff in error, cited: *Lowe* v. *Peers*, 4 Burrow, 2225; *Leary* v. *Laflin*, 101 Mass. 334; *Cotheal* v. *Talmage*, 9 N. Y. (5 Selden) 551; *S. C.* 61 Am. Dec. 716; *Bagley* v. *Peddie*, 16 N. Y. 469; *S. C.* 69 Am. Dec. 713; *Clement* v. *Cash*, 21 N. Y. 253; *Noyes* v. *Phillips*, 60 N. Y. 408; *Hamaker* v. *Schroers*, 49 Missouri, 406; *Watts* v. *Sheppard*, 2 Ala. 425; *Williams* v. *Green*, 14 Ark. 315; *Hamilton* v. *Overton*, 6 Blackford, 206; *S. C.* 38 Am. Dec. 136; *Fisk* v. *Fowler*, 10 Cal. 512; *Streeter* v. *Rush*, 25 Cal. 67, 71; *Tingley* v. *Cutler*, 7 Conn. 291; *Sparrow* v. *Paris*, 7 H. & N. 594; *Duffy* v. *Shockey*, 11 Ind. 70; *S. C.* 71 Am. Dec. 348; *Peine* v. *Weber*, 47 Ill. 41; *Gobble* v. *Linder*, 76 Ill. 157; *Downey* v. *Beach*, 78 Ill. 53; *Valentine* v. *Foster*, 1 Met. (Mass.) 520; *S. C.* 35 Am. Dec. 377; *Smith* v. *Richmond*, 19 Cal. 476; *Way* v. *Sperry*, 6 Cush. 238; *S. C.* 52 Am. Dec. 779; *Ham* v. *Hill*, 29 Missouri, 275; *Port* v. *Jackson*, 17 Johns. 239; *Jackson* v. *Port*, 17 Johns. 479; *Wicker* v. *Hoppock*, 6 Wall. 94; *Thomas* v. *Allen*, 1 Hill, 145.

No appearance for defendant in error.

Digitized by Google

Opinion of the Court.

MR. JUSTICE GRAY, after stating the case as above reported, delivered the opinion of the court.

By the rules now established, at law as well as in equity, the sum of $10,000, named in this bond, is a penalty only, and not liquidated damages. As observed by Lord Tenterden in a similar case, "whoever framed this agreement does not appear to have had any very clear idea of the distinction between a penalty and liquidated damages; for the sum" in question "is described in the same sentence as a penal sum and as liquidated damages." *Davies* v. *Penton*, 6 B. & C. 216, 222; *S. C.* 9 D. & R. 369, 376. The object of the bond is to secure the obligee's discharge from a large number of claims against him, held by certain third persons severally, amounting in all to something like $39,000, and varying from more than $8000 to less than $10 each. A failure of either of those persons to release any one of those claims would be a breach of the bond; and for any such breach a just compensation might be estimated in damages. The sum of $10,000 must therefore be regarded as simply a penalty to secure the payment of such damages as the obligee may suffer from any breach of the bond. *Watts* v. *Camors*, 115 U. S. 353; *Boys* v. *Ancell*, 5 Bing. N. C. 390; *S. C.* 7 Scott, 364; *Thompson* v. *Hudson*, L. R. 4 H. L. 1, 30; *Fisk* v. *Gray*, 11 Allen, 132.

Upon the evidence introduced and the admissions made by the plaintiff at the trial, it does not appear that he suffered any damage whatever. Although there was a technical breach of the bond at the expiration of a year from its date, by the third persons therein named having failed to release the plaintiff from any of the debts held by them, yet, within a month afterwards, and before this action was brought, he was legally discharged from all those debts by obtaining a certificate of discharge in bankruptcy. This discharge was not the less complete and effectual because the creditors had not received payment in full, nor because the plaintiff might, if he saw fit, by new promises to them, waive the discharge and revive so much of the debts as had not been satisfied by the dividends paid by the assignee in bankruptcy.

Judgment for nominal damages affirmed.

Digitized by Google

THACKRAH v. HAAS.

APPEAL FROM THE SUPREME COURT OF THE TERRITORY OF UTAH.

Submitted December 9, 1886. — Decided December 20, 1886.

A transfer of shares in a corporation, procured from the owner while so intoxicated as to be incapable of transacting business, by fraud, with knowledge of his condition, and for a grossly inadequate consideration, will be set aside in equity; and if, without any fault of his, he is unable to restore the consideration, provision for its repayment may be made in the final decree.

This suit was brought on December 16, 1880, by Thackrah against Haas, Godbe, the London Bank of Utah (Limited) and the Royal Mining Company of Utah.

The complaint alleged that on September 17, 1880, the plaintiff was owner of certain interests, property and rights in the mining company, equal to 80,000 shares of its capital stock, and then of the value of $80,000, (as to 75,000 shares in his own right, and as to the remaining 5000 as trustee,) and for the same was entitled to have 80,000 shares issued to him whenever the stock should be issuable; that on that day, and for two months before and a month afterwards, the plaintiff was continuously in a state of intoxication to such a degree as to have his mental faculties thereby so impaired as to render him not in his right mind, and wholly incapacitated to transact any business or enter into any contract; that all the defendants, at the time of the transfer hereinafter mentioned, knew that the plaintiff was and for two months had been in that condition; that while he was in that condition the bank through its officers pursued, harassed and goaded him as to a debt of his to the bank, in order to extort from him a transfer to Haas of his interest in the mining company, and the plaintiff was greatly worried by other creditors to whom he owed small amounts, and was greatly excited and annoyed by this conduct of the bank and other creditors, as the defendants knew; that while in this condition the plaintiff was, as he

Digitized by Google

believes, encouraged in his drunkenness and furnished with intoxicating drinks by the agents of Haas, with the knowledge of the bank; that on September 17, 1880, Haas and the bank, well knowing the plaintiff's condition and his incapacity for business, fraudulently imposed upon and extorted from him, for the grossly inadequate sum of $1200, a transfer or assignment in writing to Haas of the whole of the plaintiff's interests aforesaid in the mining company; that Godbe and the bank were the real parties in interest for whom the transfer was procured, and that they now held the shares, or Haas held the same for them; that of this sum of $1200 the sum of $750 was retained by the bank and applied to the payment of the plaintiff's debt to it, and the remaining $450 was applied by his wife in paying his small debts; that the plaintiff, on recovering from his intoxication, gave notice to all the defendants of his intention to bring this suit as soon as he should be able to repay to Haas the sum of $1200; but that the plaintiff, although he had used every effort to obtain money for that purpose, had been unable to obtain it, and had not now the pecuniary ability to repay that sum; that the only available means to which he could look for raising it were the interests and shares aforesaid in the mining company, fraudulently forced from him by the pretended transfer; and that if the plaintiff were now able to repay the $1200 to Haas, he could not do so, because Haas had left the Territory to reside elsewhere.

The complaint concluded by praying judgment that the transfer to Haas be declared void, and be cancelled; that the 80,000 shares of stock and said interests therein be adjudged to be the plaintiff's property; that so much thereof be sold by order of the court as should be sufficient to yield $1200 and interest from the date of the transfer, and that sum be paid to Haas; that the mining company be directed to issue the rest of those shares and interests to the plaintiff, and be restrained from issuing them to any other person; and that the other defendants restore to the plaintiff any certificates thereof in their hands, and be restrained from receiving any more, and account to him for any part that they had disposed of.

Digitized by Google

The defendants severally demurred to the complaint as stating no cause of action, the demurrers were sustained and the complaint dismissed by the courts of the Territory, and the plaintiff appealed to this court.

Mr. E. D. Hoge for appellant.

No appearance for appellees.

Mr. Justice Gray, after stating the case as above reported, delivered the opinion of the court.

No opinion of the court below and no brief or argument for the appellee having been submitted to us, it is not easy to conjecture the ground upon which the demurrers were sustained.

By the statutes of Utah, there is, for the enforcement or protection of private rights, and the redress or prevention of private wrongs, but one form of action, commenced by complaint, to which the defendant may demur or answer. If there be no answer, the relief cannot exceed that demanded in the complaint; in any other case, the court may grant any relief consistent with the case made by the complaint and embraced within the issue. Compiled Laws of Utah of 1876, §§ 1226, 1247, 1263, 1374.

The complaint in the present case is in the nature of a bill in equity against a mining corporation, a bank, and two individuals, alleging that while the plaintiff was in such a state of intoxication as not to be in his right mind or capable of transacting any business or entering into any contract, the defendants, knowing his condition, fraudulently extorted from him for the sum of $1200 a transfer to one of those persons, for the benefit of the other and of the bank, of his interests, worth $80,000, in shares to that amount in the mining corporation; and praying for a cancellation of the transfer, for a sale of enough of the interests transferred to repay the $1200, for the issue of the rest by the mining company to the plaintiff, for the restoration to him by the other defendants of any certificates in their hands, and for an account and an injunction. It cannot be doubted that this was such a case of fraud as

Digitized by Google

entitled him to relief in equity. 2 Pomeroy, Eq. Jur. §§ 914, 949.

The complaint further alleges, and the demurrer admits, that the greater part of this sum of $1200 was retained by the bank and applied to the payment of a debt previously due to it from the plaintiff, and (it would seem before he recovered from his intoxication) the rest of that sum was applied by his wife to the payment of his small debts, and he had no means available to raise money to repay the $1200, except the interests in the mining company, which he had been induced by the defendants' fraud to make a transfer of. The plaintiff, without any fault of his, being unable to repay the consideration of the fraudulent transfer, equity will not require him to do so as a condition precedent to granting him relief, but will make due provision, in the final decree, for the repayment of that sum out of the property recovered. *Reynolds* v. *Waller*, 1 Wash. Va. 164; *Allerton* v. *Allerton*, 50 N. Y. 670; *S. C.*, more fully stated, in *Harris* v. *Equitable Assurance Society*, 64 N. Y. 196, 200.

Judgment reversed, and case remanded for further proceedings in conformity with this opinion.

BROOKS *v.* CLARK.

ERROR TO THE CIRCUIT COURT OF THE UNITED STATES FOR THE EASTERN DISTRICT OF PENNSYLVANIA.

Submitted November 17, 1886. — Decided December 13, 1886.

On the 31st December, 1884, A, a citizen of Pennsylvania, sued out of a court of that State a summons in an action on contract to recover a balance of money lent, against B, a citizen of New York, and C, a citizen of Pennsylvania, surviving partners of D, returnable on the 1st Monday in January then next, and C accepted service before the return day. On the 26th of January, 1885, judgment was entered against both defendants for want of defence, under the practice in that State. On the 3d February, 1885, B voluntarily appeared and accepted service with the like force

Digitized by Google

as if the writ had been returnable on the 1st Monday in April and had been served on the 1st Monday in March. On May 2d, 1885, B filed his affidavit of defence, and immediately filed a petition for the removal of the case to the Circuit Court of the United States, on the ground that the controversy in the suit was between citizens of different states. The cause being removed, it was, on motion of the plaintiff, remanded to the state court on the ground that it appeared by the record that defendants were not both citizens of another state than plaintiff, and that plaintiff was a citizen of Pennsylvania. *Held*, (1) That under the practice in Pennsylvania this was a proceeding in the original suit, under the original cause of action; (2) That the controversy was not a separable one within the meaning of the removal act of 1875; (3) That the fact that the liability of C had been fixed by the entry of judgment against him did not affect the principle.

A removal of a cause from a State court to a Federal court made on a petition under the act of March 3, 1875, 18 Stat. 470, on the ground of a separable controversy, takes the whole cause from the jurisdiction of the state court; but a removal for the same cause under the act of 1866 may take only the separate controversy of the petitioning defendant, leaving the state court to proceed against the other defendants.

Yulee v. *Vase*, 99 U. S. 539, distinguished.

Barney v. *Latham*, 103 U. S. 205, affirmed.

Putnam v. *Ingraham*, 114 U. S. 57, affirmed.

This was a writ of error brought under § 5 of the act of March 3, 1875, c. 137, 18 Stat. 470, for the review of an order of the Circuit Court remanding a case which had been removed from the Court of Common Pleas, No. 1, of the county of Philadelphia, Pennsylvania. The facts were these:

On the 31st of December, 1884, Edward S. Clark sued out of the Court of Common Pleas a writ of summons against "Charles H. Brooks and Josiah D. Brooks, surviving partners of D. Leeds Miller, deceased, trading as Brooks, Miller & Co.," returnable on the first Monday of January then next. Before the return of the writ Josiah D. Brooks endorsed thereon as follows:

"I accept service of within writ. Josiah D. Brooks."

On the 12th day of January, 1885, Clark filed an "affidavit of loan" in accordance with the provisions of a statute of Pennsylvania, showing that the suit was brought for $15,000 balance due to him on the 31st of December, 1876, for moneys lent the firm of Brooks, Miller & Co., on which interest had

Digitized by Google

been paid to October 30, 1884. Appended to this affidavit was what purported to be "a copy of account from defendants' books," showing the loan and cash paid for interest. By a statute of Pennsylvania it was lawful for the plaintiff, "on or at any time after the third Saturday succeeding" the return day of the writ, "on motion, to enter a judgment by default, . . . unless the defendant shall previously have filed an affidavit of defence, stating therein the nature and character of the same." Josiah D. Brooks did not file an affidavit of defence within the time thus limited, and, accordingly, on the 26th of January, 1885, the following entry was made in the cause:

"And now, on motion of Pierce Archer, Esq., the court enters judgment against the defendants for want of an affidavit of defence."

On the same day an assessment of damages was also filed in the cause, as follows:

"I assess damages as follows:

Real debt	$15,000 00
Int. from 10, 30, '84 to 1, 24, '85 . .	210 00
	$15,210 00

"J. KENDERDINE,
pro Proth'y."

This, according to the law and practice in Pennsylvania, was a final judgment in the action against Josiah D. Brooks for the amount of damages so assessed, and, accordingly, in the docket entries this appears:

"Jan'y 26, 1885, Judg't for want of aff. of defence against Josiah D. Brooks only.

"*Eo die.* Dam's assessed at $15,210.00."

On the 3d of February, 1885, Charles H. Brooks voluntarily caused to be endorsed on the original summons, then in court, the following:

"I accept service of the writ for Charles H. Brooks, with like force and effect as if the writ had been issued ret'd to the

Digitized by Google

first Monday of April and had been served on or before the first Monday of March, A.D. 1885.

"JOHN G. JOHNSON,
Att'y Ch. H. Brooks."

On the second day of May, 1885, Charles H. Brooks filed in the cause his affidavit of defence, in which he set forth, in substance, that, until the 31st of December, 1879, he was a member of the firm of Brooks, Miller & Co.; that previous to that time Clark had deposited moneys with the firm, and on that day there was due him $15,000, for which he held the firm's due bill; that on that day Josiah D. Brooks and Miller purchased the interest of Charles H. Brooks in the firm, paying him therefor $21,749.40, and assuming all the debts; that the partnership was thereupon dissolved, and Clark duly notified; that immediately on the dissolution, Josiah D. Brooks and Miller formed a new partnership, and continued the old business; that Clark was duly notified of the assumption by the new firm of all the debts of the old, and with this knowledge gave up the due bill of the old firm which he held, and took another for the same amount from the new firm in full satisfaction and discharge of the original indebtedness; and that the new firm paid the interest as it thereafter accrued until the time mentioned in the affidavit of loan, to wit, October 30, 1884. On this state of facts, Charles H. Brooks insisted, by way of defence, that he was discharged from all liability.

Immediately on filing this affidavit of defence Charles H. Brooks presented a petition for the removal of the suit to the Circuit Court of the United States for the Eastern District of Pennsylvania, the material parts of which were as follows:

"The petition of Charles H. Brooks, defendant above named, who was sued with Josiah D. Brooks, as surviving partners, &c., respectfully represents: That the controversy in this suit is between citizens of different states. That your petitioner was at the time of the commencement of this suit, and still is, a citizen of the state of New York, and that the said plaintiff, Edward S. Clark, was then, and still is, a citizen of the state

Digitized by Google

of Pennsylvania, and that the matter and amount in dispute in the said suit exceeds, exclusive of costs, the sum or value of five hundred dollars."

On the 23d of May, 1885, the suit was entered by Charles H. Brooks in the Circuit Court, and, on the 8th of September following, Clark moved that it be remanded. Afterwards, on the 8th of October, this motion was granted, "it appearing by inspection of the record that the defendants are not both citizens of another state than the plaintiff, and that said Josiah D. Brooks is a citizen of Pennsylvania."

To reverse that order this writ of error was brought.

Mr. Frank P. Prichard and *Mr. John G. Johnson* for plaintiff in error.

It may be well to state at the outset that appellant does not seek to attach or qualify the recent decisions of this court that an original joint cause of action does not become separated into several controversies, simply because the defendants sever in their pleadings and defences. A careful examination of the cases on this subject will show that they group themselves into three classes, viz.:

First. Where no judgment has been entered, but separate defences have been raised by the defendants. In such cases one defendant cannot remove, because the plaintiff can still elect to treat the controversy as joint. *Louisville & Nashville Railroad* v. *Ide*, 114 U. S. 52, is an example of this class.

Second. Where the plaintiff has entered an interlocutory judgment by default against one defendant. In such cases the other defendant cannot remove, because the final judgment will still be joint, and the defendant against whom the interlocutory judgment was entered remains interested in, and will be affected by the final judgment. *Putnam* v. *Ingraham*, 114 U. S. 57, is an example of this class.

Third. Where a final judgment has been rendered against one defendant. In such cases the other defendant can remove, because the defendant against whom final judgment has been entered has been thus removed from the controversy, and is no

Digitized by Google

longer interested in or affected by the result of the controversy with his codefendants. *Yulee* v. *Vose*, 99 U. S. 539, is an example of this class.

The distinction between these classes of cases is not an accidental one, but is a logical result of a connected and consistent train of reasoning. Under these decisions, if before Charles H. Brooks accepted service of summons the controversy had, as to Josiah D. Brooks, been ended by a final judgment for an ascertained sum, so that he would not be a party to, or interested in, the result of the subsequent litigation with Charles H. Brooks, the latter had not only a separable but a separated controversy which he could remove. We will, therefore, turn our attention to the only remaining question, viz.: Was the judgment against Josiah D. Brooks a final judgment as to him, which removed his interest in the subsequent litigation with Charles H. Brooks?

The judgment against Josiah D. Brooks was not entered upon common law pleadings, but under special statutes of Pennsylvania, and was a final judgment. *Sellars* v. *Bush*, 47 Penn. St. 344; *McClung* v. *Murphy*, 2 Miles, 177. Under the common law as recognized and enforced in Pennsylvania, there could not be, in an action against two defendants on a joint cause of action, two separate final judgments, unless it affirmatively appeared on the record that they were upon different issues. Plaintiff might take an interlocutory judgment against one defendant, and then proceed to obtain final joint judgment against both; but he could not take final judgment against one without releasing the other. *Williams* v. *McFall*, 2 S. & R. 280; *Ridgely* v. *Dobson*, 3 W. & S. 118, 123.

This common law rule worked great hardship, and led to the enactment of two statutes, one of April 6, 1830, the other of April 4, 1877. [These statutes are quoted in the opinion of court, *post.*]

Bearing these statutes in mind, we will now examine the facts of this case. As the case stood after judgment had been entered against Josiah D. Brooks, it was an action against two with service on one only, and final judgment against the party served for a determinate amount. Afterwards the other de-

Digitized by Google

fendant, who was a resident of New York, appeared on the scene. He had a separate defence, personal to himself, and was willing to voluntarily appear to have it tried. If the act of April 4th, 1877, above cited, had not been passed, it would have been necessary for the plaintiff to have brought a new suit in which Charles H. Brooks could have accepted service, since the prior act of 1830 only allowed a recovery against the defendant not served "*in another suit.*" But as the act of 1877 had altered the law so as to allow a judgment "*in the same suit,*" there was no necessity for new process, and Charles H. Brooks merely accepted service of the original summons as if it had been issued returnable at a return day after the date of the judgment against Josiah D. Brooks. He then filed his affidavit of defence and his petition for removal. The case then stood thus: — A suit against two in which one alone was served; a final judgment against the one served for a determinate amount; a subsequent appearance of the other defendant and a separate issue with him in which he was debarred by the act of 1877 from setting up the previous final judgment against his codefendant. Now let us apply the principle laid down by this court in the cases already cited. Before any service on Charles H. Brooks there had been a judicial determination of the suit as to Josiah D. Brooks, which as to him put an end to the controversy. That judgment could not be affected by any subsequent judgment against his codefendant either in the same or in another suit. Afterwards a new controversy was put in issue by Charles H. Brooks which, whether in the same or in another suit, could not be affected either in his favor or against him by the result previously reached against his codefendant. If in this controversy a judgment should be rendered for or against Charles H. Brooks, it would be for or against him alone, and Josiah D. Brooks would not be a party to it. This becomes very clear if we suppose that on February 3 Charles H. Brooks, instead of appearing in the original suit, had appeared in a new suit brought against him on the same cause of action. No one would for a moment pretend that this was not a separate controversy. The effect, however, of subsequent proceedings in *the same suit* under the

Digitized by Google

act of 1877 is precisely the same as subsequent proceedings in a new suit under the act of 1830. In both cases there is a final judgment as to one. In both there is a subsequent proceeding against the other, not affected by the previous judgment.

In this case there is no mere severance in the pleadings, leaving the plaintiff at liberty to still treat the action as a joint one. The plaintiff has already elected to separate the controversies by taking final judgment against the defendant served before the other defendant appeared; nor is this the case of an interlocutory judgment by default for want of an appearance, since the judgment against Josiah D. Brooks was a final one for a determinate amount. It is, however, within the third class of cases mentioned at the head of this brief, a case in which one defendant has been separated by a final judgment, leaving a controversy with his codefendant to which he is no longer a party.

It may be said that Josiah D. Brooks may appeal, but to such appeal Charles H. Brooks would be no party. The statute allowing separate judgments must necessarily contemplate separate appeals, which shall not interfere with the proceedings against the other defendants. In fact, the statute has placed such judgments in the same position as separate judgments at common law upon different issues.

Further argument would seem to be unnecessary.

Mr. Pierce Archer for defendant in error.

Mr. Chief Justice Waite after stating the case as above reported, delivered the opinion of the court.

The action as originally brought was a joint action on a joint liability of Josiah D. Brooks and Charles H. Brooks as partners, and, according to *Putnam* v. *Ingraham*, 114 U. S. 57, it was not separable, for the purposes of removal prior to the judgment against Josiah D. Brooks, even after his default. The question we now have to consider is, therefore, whether the judgment against Josiah D. Brooks takes the case out of that rule.

Digitized by Google

A statute of Pennsylvania, passed April 6, 1830, provided as follows:

"In all suits now pending or hereafter brought in any court of record in this Commonwealth, against joint and several obligors, copartners, promisors or the indorsers of promissory notes, in which the writ or process has not been or may not be served on all the defendants, and judgment may be obtained against those served with process, such writ, process or judgment, shall not be a bar to recovery *in another suit* against the defendant or defendants, not served with process." 1 Brightly's Purdon's Digest, 11th ed., 953, § 43.

Another statute, passed April 4, 1877, enacted as follows:

"Where judgment has been or may hereafter be obtained in any court of record of this Commonwealth, against one or more of several codefendants, in default of appearance, plea or affidavit of defence, said judgment shall not be a bar to recovery *in the same suit* against the other defendants, jointly, or jointly and severally liable as coöbligors, copartners, or otherwise." *Ib.* 954, § 49.

By another statute, passed August 2, 1842, it was provided that in all actions instituted against two or more defendants, in which judgment may be entered on record at different periods against one or more of the defendants, by confession or otherwise, the entries so made "shall be considered good and valid judgments against all the defendants, as of the date of the respective entries thereof, and the day of the date of the last entry shall be recited in all subsequent proceedings by *scire facias* or otherwise, as the date of judgment against all of them, and judgment rendered accordingly."

And; "When an entry of judgment . . . shall be made on the records of any court against two or more defendants, at different periods, such entries shall operate as good and valid judgment against all the defendants; and the plaintiff may proceed to the collection of the money due thereon, with costs, as if the entries had all been made at the date of the latest entry." *Ib.* §§ 45, 46.

This is a proceeding in the original suit and on the original cause of action. If a judgment shall be rendered against

Digitized by Google

Charles H. Brooks, it will be a judgment in the original action, the same in all respects, except as to date, that it would have been if he had been served with process and had put in the same defence before the judgment against Josiah D. Brooks. He voluntarily appeared "in the same suit" by accepting service of the original summons, but with an extension of time to put in his personal defence. Had the same thing been done before the judgment against Josiah D. Brooks, there could have been no removal on the petition of Charles H. Brooks, or on the petition of all the defendants, because the suit would have been against the two defendants, one of whom was a citizen of the same State with the plaintiff, and a separate defence by one. This, it has often been held, would not show or create a separable controversy, within the meaning of the removal act. *Hyde* v. *Ruble*, 104 U. S. 407; *Ayres* v. *Wiswall*, 112 U. S. 187, 193; *Louisville & Nashville Railroad* v. *Ide*, 114 U. S. 52; *Putnam* v. *Ingraham*, 114 U. S. 57; *St. Louis, &c., Railway* v. *Wilson*, 114 U. S. 60; *Pirie* v. *Tvedt*, 115 U. S. 41; *Starin* v. *New York*, 115 U. S. 248, 259; *Sloane* v. *Anderson*, 117 U. S. 275; *Fidelity Ins. Co.* v. *Huntington*, 117 U. S. 280; *Core* v. *Vinal*, 117 U. S. 347; *Plymouth Mining Co.* v. *Amador Canal Co.*, 118 U. S. 265. It is true there is now no longer any controversy upon the original cause of action with Josiah D. Brooks, against whom a final judgment has already been rendered, but neither was there in *Putnam* v. *Ingraham*, *supra*, with the defendant, Morgan, who was in default, and made no defence. In this respect the two cases differ only in degree, and not in kind. In this case the proceedings had gone one step further than in the other, and the default of Josiah D. Brooks had been fixed by the judgment. In principle, however, the cases are alike.

Much reliance was had in argument on *Yulee* v. *Vose*, 99 U. S. 539. The petition in that case was filed under the act of July 27, 1866, 14 Stat. 306, c. 288, where only the separate controversy of the petitioning defendant could be removed, and the plaintiff was allowed to proceed against all the other defendants, in the State court, as to the remaining controversies in the suit, the same as if no removal had been had.

Digitized by Google

Under that statute the suit could be divided into two distinct parts — one removable and the other not. That which was removable might be taken to the Circuit Court of the United States, and that which was not removable would remain in the State court for trial without any reference whatever to the other. The removal had the effect of making two suits out of one. Not so with the act of 1875. Under that, it was held in *Barney* v. *Latham*, 103 U. S. 205, that, if a separable controversy exists, a removal for such cause takes the whole suit to the Circuit Court, and leaves nothing behind for trial in the State court.

In *Yulee* v. *Vose* there were several causes of action embraced in the suit — some joint against Yulee and all the other defendants, and one against Yulee alone as the endorser of certain promissory notes. Upon a trial, judgment had been rendered in favor of all the defendants upon all the causes of action. This judgment was affirmed by the highest court of the State as to all the causes of action, except that against Yulee alone as endorser. As to that it was reversed and the cause sent back for a new trial. It was under these circumstances that it was said "it appeared that the controversy, so far as it concerned Yulee, not only could be, but actually had been, by judicial determination, separated from that of the other defendants;" and a removal of this controversy, thus actually separated from the rest of the case, was directed upon the petition of Yulee, filed after the case had been sent back for trial as to him alone, and before the trial or final hearing, which was in time under that statute. Upon this removal only the separate controversy with Yulee was carried to the Circuit Court, and the judgment in that would have no connection whatever with the other parts of the case, which remained undisturbed in the State court, where the record continued, so far as they were concerned.

In the present case, however, and under the present law, as ruled in *Barney* v. *Latham*, *supra*, the whole original suit, including the judgment against Josiah D. Brooks, must be taken to the Circuit Court, because this is a proceeding under the Pennsylvania statute, in that suit, to obtain a judgment

Digitized by Google

therein against Charles H. Brooks. If the removal should be allowed and a judgment rendered in favor of Charles H. Brooks, the Circuit Court would be compelled to carry into execution the judgment of the State court against Josiah D. Brooks, which would in no sense be a judgment of the Circuit Court, but of the State court alone. As Charles H. Brooks made himself a party to the "same suit," he voluntarily subjected himself to the obstacles which were in the way of removing his controversy to the Circuit Court, and must be governed accordingly. *Fletcher* v. *Hamlet*, 116 U. S. 408. Had the plaintiffs proceeded against him under the other statute and brought another suit, the case would have been different, because that would have been a separate and distinct action to which there was no other defendant but himself; but this proceeding is merely auxiliary to the original suit, and in all respects a part of that suit, from which it cannot be separated. If a judgment shall be rendered against Charles H. Brooks, that judgment and the judgment already existing against Josiah D. Brooks "will be treated as one on the *scire facias* or execution." *Finch* v. *Lamberton*, 62 Penn. St. 370.

The order remanding the case is

Affirmed.

ELDRED v. BELL TELEPHONE COMPANY.

ERROR TO THE CIRCUIT COURT OF THE UNITED STATES FOR THE EASTERN DISTRICT OF MISSOURI.

Argued December 7, 8, 1886.—Decided December 20, 1886.

On the facts in this case as stated in the opinion of the court: *Held*, That the jury would not have been warranted in drawing the conclusion of fact from the evidence that there was such an agreement as that sued on; that the relation of the parties was not such as, in contemplation of law, to give rise to such liability; and that there was no error in the instruction of the court below to find a verdict for defendant.

This was an action at law commenced by plaintiff in error as plaintiff to recover the par value of 250 shares in the capi-

Digitized by Google

tal stock of the defendant in error. Judgment below for defendant. The plaintiff sued out this writ of error. The case is stated in the opinion of the court.

Mr. Millard R. Powers (*Mr. L. B. Valliant* was with him on the brief) for plaintiff in error.

Mr. Henry Hitchcock for defendant in error.

Mr. Justice Matthews delivered the opinion of the court.

The plaintiff in error, who was plaintiff below, being a citizen of the State of New York, brought his action at law in the Circuit Court of the United States for the Eastern District of Missouri against the Bell Telephone Company of Missouri, a corporation of that State, to recover $25,000, the price and value of 250 shares of the capital stock of the defendant corporation, of the par value of $100 per share, the personal property of the plaintiff, advanced, furnished, and delivered to the defendant at its special instance and request, to be by the defendant accounted for to the plaintiff. The defendant filed an answer containing a general denial of the allegations of the petition. The case came on for trial before a jury, evidence on both sides was heard, which is fully set out in a bill of exceptions, and the judge instructed the jury to find a verdict for the defendant, which was done. The judgment rendered thereon is sought to be reversed by the present writ of error.

The question presented is, whether there was sufficient evidence in support of the plaintiff's cause of action to require its submission to the jury. It is conceded that there was no express agreement between the parties under which the defendant was bound to pay for the shares in question. The plaintiff's claim to recover was based entirely upon the supposition of a contract to be inferred from the acts of the parties. The undisputed facts on which this claim is founded are as follows:

In October, 1879, the plaintiff, Eldred, had some correspondence with the National Bell Telephone Company of Boston, with reference to acquiring the right to operate telephonic exchanges in Kansas City and St. Louis. The arrangement

Digitized by Google

which resulted from that correspondence required the organization of a corporation under the laws of Missouri, and the acquisition by it of certain outstanding contracts between the National Bell Telephone Company and the Kansas City Telephonic Exchange, and also of a contract between the former and the American District Telegraph Company of St. Louis. Accordingly, the plaintiff, on December 3, 1879, organized under the laws of that State the Bell Telephone Company of Missouri, the nominal capital stock of the corporation being fixed at $400,000, in shares of $100 each. This stock was to be issued as full-paid to the plaintiff and others named by him as associates, in consideration of the transfer to said corporation of the rights expected to be acquired by him from the National Bell Telephone Company upon the conditions required by it. The plaintiff associated with himself four personal friends, Messrs. Kent and Storke, of New York, and Durant and Smith, of St. Louis, it being necessary, under the laws of Missouri, to have five stockholders as incorporators, agreeing to give them certain proportions of his interest in the rights to be acquired by him and transferred to the corporation. The proportions were to be as follows: Storke 750 shares, Kent 250 shares, Smith 20 shares, and Durant 750 shares, out of 4000, Eldred himself retaining the remaining 2230 shares. No money was paid or to be paid by any of these incorporators for their interests. In the organization of the company, the capital stock was subscribed for and taken up in the manner and proportions just stated, and certificates of stock for these amounts, respectively, were made out with the intention of delivering them to the subscribers. Before any such delivery was made, however, on the 19th day of December, 1879, the transaction took place by which the rights of the American District Telegraph Company were secured to the Bell Telephone Company of Missouri. To accomplish that, it became necessary to make a consolidation, under the laws of Missouri, of the Bell Telephone Company of Missouri, as already organized, with the American District Telegraph Company. The latter was a corporation of Missouri, with a capital stock consisting of 500 shares of $50 each, 263 of which

Digitized by Google

the plaintiff Eldred owned and controlled. According to the plan of consolidation agreed on, it was necessary to issue to the owners of the capital stock of the American District Telegraph Company 250 shares of the stock in the Bell Telephone Company of Missouri.

The plaintiff, in his examination-in-chief, in answer to a question as to what steps were taken to effect this consolidation, made the following statement:

"We met several times, and I remember that at that time there seemed to be some difficulty about the consolidation of the two companies in consequence of the statute of the state having been changed. There were several meetings held, and I believe the attorneys who had charge of the matter finally made the consolidation under both of the statutes, which necessitated considerable delay. On coming together, we had issued 4000 shares of stock, and we wished to consolidate with the American District Telegraph Company, of which I was then president. I was president of both companies. Therefore, it became necessary to provide for some shares to take up the stock of the American District Telegraph Company. These gentlemen, with whom I had been already associated, four in number, at that time were all personal friends of mine, and I gave them this stock. All the business was like a family operation. Two of the parties were in New York, Mr. Kent and Mr. Storke, and Durant, Smith, and myself were here. Previous to my coming to St. Louis, I had obtained proxies for the purpose of voting the stock of Mr. Storke and Mr. Kent, they not being present, and, as I had agreed with them in regard to the proportion of stock which I was to give them, I did not feel authorized to act for them without authority, and therefore I said that I would advance the 250 shares necessary to make up the capital stock of the American District Telegraph Company out of the proportion which was to be issued to me. I think that was the way it was done. We had some trouble about the minutes under the existing statute, and I think they were fixed up by the attorneys afterwards, after I left the city, or about that time."

A consultation was held between Eldred, the plaintiff, and

Digitized by Google

Durant and Smith, two of his associates, on December 19, 1879, at the office of the Bell Telephone Company in St. Louis, as to how the arrangement should be consummated. The plaintiff's own statement, on cross-examination as a witness in the case, of this conference, is as follows:

"All that I remember about that particular portion of it is, that it was at no meeting of the board; so far as my recollection goes, Mr. Durant was the only person present, and we found by figuring up the stock that we hadn't enough shares to take in the American District Telegraph Company of St. Louis. These gentlemen in interest were all personal friends of mine. Some of them were in New York, and I had no authority to make any concessions for them, and I therefore agreed with Mr. Durant, who was vice-president and general manager of the company, to advance 250 shares of the stock of the Bell Telephone Company of Missouri, so that we might take up the entire capital stock of the American District Telegraph Company." In answer to the question, "You say that you agreed. What did Durant say?" he said, "Mr. Durant didn't have much to say about it; I was the owner of the property, and he acquiesced generally in all I did."

On the same day a meeting of the stockholders of the Bell Telephone Company of Missouri was held at its office, at which the three persons named, Durant, Eldred, and Smith, were present. Eldred was chairman of the meeting, and a preamble and resolution offered by Durant were unanimously adopted, and are as follows:

"Whereas the National Bell Telephone Company (a corporation duly organized under the laws of the State of Massachusetts) has, by agreement with H. H. Eldred, granted the said Eldred certain valuable rights, concessions, and franchises under what are known as the Bell telephone patents and other patents owned and controlled by the said company, said agreement being contained in a written proposition duly accepted by the said Eldred, and to be fully set forth in contracts to be duly executed by the said National Bell Telephone Company, pursuant to said agreements; and whereas, the said rights, concessions, and franchises, so acquired by said Eldred, were

Digitized by Google

by him transferred to the parties hereinafter named, with interests in the proportion hereinafter set forth, as follows: H. L. Storke, 750; George H. Kent, 250; E. A. Smith, 20; George F. Durant, 750; H. H. Eldred, 2230; total, 4000; said parties being the owners of said interests at the time of the incorporation of this company, and being the sole incorporators of this company; and whereas, said exclusive rights, concessions, and franchises constitute property rights of great value to this corporation under its charter:

"*Resolved*, That in consideration of the complete assignment to this corporation in due form of all the rights, title, and interest of said parties in said exclusive rights, concessions, and franchises, so that the same may be fully possessed, enjoyed, and enforced as by said Eldred, this corporation hereby allots and sets apart to said parties 4000 full-paid shares of its capital stock, constituting the authorized capital stock of said company, to each of said parties a proportionate part of said 4000 shares, according to his interest in said rights, concessions, and franchises, and according to the subscription of each to the capital stock of this company, and constituting a full payment of said subscription: H. L. Storke, 750 shares; George H. Kent, 250 shares; E. A. Smith, 20 shares; George F. Durant, 750 shares; H. H. Eldred, 2230 shares; and, in consideration of the agreement of H. H. Eldred to surrender to this company 250 shares of stock so allotted to him for the purpose of effecting a consolidation with the American District Telegraph Company of St. Louis, a certificate of 1980 shares shall be issued to said Eldred, and the 250 shares so surrendered shall be retained in the possession of this company, subject to issuance hereafter for said purpose of consolidation; and the officers of the company are directed to issue in due form certificates of stock to said parties above named, and to do and perform all acts necessary and proper for the full acceptance on the part of this company of the aforesaid agreements and propositions of the National Bell Telephone Company in the execution of contracts or otherwise."

Accordingly, the original certificate for 2230 shares of stock

Digitized by Google

made out to Eldred, but never delivered, was destroyed, and another certificate prepared for 1980 shares, which was delivered to and received by Eldred.

It further appears from the evidence, that the plaintiff advanced to the defendant $6000 in money for the purpose of meeting the expenses of starting, which was afterwards repaid by it to him, and for the rights acquired from other sources than the American District Telegraph Company of St. Louis the Bell Telephone Company of Missouri subsequently paid the Western Union Telegraph Company, which was in fact their owner, the sum of $75,000.

The implied contract relied upon by the plaintiff in this case is of that class in which the promise of the defendant is to be inferred from the acts and conduct of the parties. The contract assumed to be thus proven is, that, in consideration of 250 shares of its capital stock owned by the plaintiff and advanced by him to the defendant, at its instance and request, to be used for its benefit and advantage, and accepted by the defendant and so used, the defendant undertook and promised to pay the reasonable value thereof. The facts and circumstances relied on to justify this assumption do not seem to us to warrant it. It is a misconception of the transaction, as we view it, to construe it either as a loan of stock by the plaintiff to the defendant, to be returned either in specie or accounted for in value, or as a sale of stock by the plaintiff to the defendant at what the stock was reasonably worth. In truth, the dealing supposed to result in this bargain does not appear to have taken place between the plaintiff and the defendant, but between the plaintiff and his associates, corporators in the original corporation before the consolidation. It was an arrangement having reference to the relative rights and interests of the corporators themselves, and consisted in the readjustment of the relative proportions, *inter sese*, according to which they should hold the capital stock of the company. There had been an agreement by which the 4000 shares should be allotted among them, so that the plaintiff might have 2230; the new agreement was that that allotment should be so changed as that the plaintiff would have but

Digitized by Google

1980; the 250 shares in question being surrendered out of the original allotment for another and different use in the reorganization of the company, so as to take in other stockholders and other interests. The plaintiff in his testimony distinctly states, that, when it became apparent that 250 shares of the stock were required for this purpose, he did not feel at liberty to call upon his associates for a contribution, as he had promised them the number of shares specifically designated. It is difficult to see how this does not also exclude the liability he now seeks to enforce against the corporation, which is but another mode of compelling his associates now to make that contribution, which he says he did not feel at liberty then to exact. The benefit conferred, assumed to be the consideration for the promise to return or repay which is sought to be enforced, was not in fact conferred upon the existing corporation sued as a defendant; the only difference in its situation, resulting from the transaction, is that the stockholders of the American District Telegraph Company, instead of Eldred, became the owners of the 250 shares surrendered by the plaintiff, for which they paid by a transfer of the rights and property of the District Telegraph Company. The real benefit and advantage growing out of the transaction enured exclusively to the original corporators in the first Bell Telephone Company of Missouri, including the plaintiff himself, as it was the means whereby that corporation was enabled successfully to accomplish the object of its incorporation, but against them, as has already been shown, the plaintiff makes no claim. To enforce his claim against the existing corporation is not only to compel his original associates to contribute, but also the stockholders of the District Telegraph Company, who became, by virtue of the transaction, stockholders in the defendant corporation; but they made no such bargain as that. The transaction, whatever it was, was reduced to writing at the time and put on record, as a part of the proceedings of the stockholders of the Bell Telephone Company of Missouri, in the recitals and resolution already set out, and is correctly characterized in them as an agreement on the part of the plaintiff to surrender to the company 250 shares of the

Digitized by Google

stock previously allotted to him, for the purpose of effecting a consolidation with the American District Telegraph Company of St. Louis, the 250 shares so surrendered to be retained in the possession of the company, subject to be issued thereafter for that purpose. There is nothing whatever in this statement to suggest or to warrant the conclusion that there was any sale of this stock by the plaintiff to the company, or any loan or advance of it for its uses, for which it was expected any return or payment should be made.

The plan for the organization of the company, both in its general outlines and in its details, was the plaintiff's own scheme, of which he continued to have control until its consummation, as he himself testifies. The original plan was, that he was to retain 2230 shares out of 4000 of the capital stock of the new company; but it was an essential part of his undertaking to acquire the property and franchises of the American District Telegraph Company of St. Louis. He became satisfied that the best way to accomplish that was by the consolidation of the two companies as actually effected, and to ensure this it became necessary for him to diminish the relative quantity of his interest in the capital of the consolidated company; and to this end, and for this consideration, as actually and fully expressed in the resolution adopted by the stockholders, of whom he was chief, he agreed to surrender to the company 250 shares of the stock previously intended for himself. He asked no one to contribute; he certainly did not contemplate the return of the stock in kind, for that was impossible; it is not a reasonable inference, from the facts and circumstances, that he expected any payment. It is clear, beyond doubt, that those with whom he was dealing had no reason to believe the existence of any expectation of that kind on his part. It was certainly treated and considered at the time as a part, and a necessary part, of the arrangement by which the plaintiff himself performed his own engagements with the National Bell Telephone Company for the purpose of putting into successful operation the scheme which he had organized by the formation of the Bell Telephone Company of Missouri.

Digitized by Google

The plaintiff, as a part of his case, read in evidence from the minute book of the Bell Telephone Company of Missouri the act and agreement of consolidation between it and the American District Telegraph Company of St. Louis, in which it is recited that the party of the first part, the Bell Telephone Company of Missouri, "has purchased and is now owner of 250 shares of its capital stock;" and this recital is relied upon as an admission that the transaction was one of purchase and sale, and not a voluntary surrender of the right to unissued stock. The recital, however, has no effect as an estoppel, the plaintiff being no party to the deed which contains it, and acquiring no rights on the faith of it; and it is in fact an innocent misdescription of a transaction, the real nature of which fully and unambiguously appears from the other record of the same company, where it speaks of and records the transaction as it occurred and when it took place, being made, indeed, for that very purpose.

We are, therefore, of opinion that the jury would not have been warranted in drawing the conclusion of fact, from the evidence in the case, that there was any such agreement as that sued on, and that the relation of the parties, as shown in the circumstances of the transaction, was not such as, in contemplation of law, to give rise to any such liability.

The ruling of the Circuit Court was, therefore, correct, and its judgment is

Affirmed.

WHITFORD *v.* CLARK COUNTY.

ERROR TO THE CIRCUIT COURT OF THE UNITED STATES FOR THE EASTERN DISTRICT OF MISSOURI.

Argued December 6, 7, 1886. — Decided December 20, 1886.

When a witness, whose deposition is taken *de bene esse* under Rev. Stat. § 863, lives more than 100 miles from the place of trial when the deposition is taken, it will be presumed that he continues to live there at the time of trial, and no further proof on that subject need be offered by the party

Digitized by Google

offering the deposition unless this presumption is overcome by proof from the other side; but if it be overcome, and the party offering the deposition has knowledge of his power to get the witness in time to secure an attendance at the trial, the deposition will be excluded. This rule does not apply to depositions taken under § 866.

When the statutes of the United States make special provisions as to the competency or admissibility of testimony, they must be followed in the courts of the United States; and not the laws or practice of the State in which the court is held, when they are different.

The case is stated in the opinion of the court.

Mr. Clinton Rowell and *Mr. John B. Henderson* for plaintiff in error. *Mr. H. A. Clover* was with them on the brief.

Mr. Matthew G. Reynolds and *Mr. William H. Hatch* for defendant in error. *Mr. Thomas J. C. Fagg* and *Mr. James M. Lewis* were with them on the brief.

Mr. Chief Justice Waite delivered the opinion of the court.

In this case the trial was by the court, a jury having been waived. The record presents a special finding of facts and certain exceptions to the rulings of the court on the admissibility of testimony. Upon the facts as found we should have had no hesitation in affirming the judgment, but in the rulings excepted to there was error. As part of the evidence on which the findings were made, the court, against the objections of Whitford, the plaintiff in error, allowed a deposition of N. T. Cherry, taken *de bene esse* under § 863 of the Revised Statutes, to be read, when it was made to appear before the reading that the witness was himself actually present in court, ready and able to testify in the case if called. From the opinion filed on the decision of a motion for a new trial, *Whitford* v. *Clark County*, 13 Fed. Rep. 837, it appears that the court held the rule on this point "to be that when a deposition in a civil action has been duly taken, because the witness resides more than one hundred miles distant, said deposition is admissible, subject, however, to the right of the adverse party to place him on the witness stand if present. Such is understood

Digitized by Google

to be the true rule, although decided cases are not fully in accord." But by § 865 of the Revised Statutes it is expressly provided, that, "unless it appears to the satisfaction of the court that the witness is then dead, or gone out of the United States, or to a greater distance than one hundred miles from the place where the court is sitting, or that, by reason of age, sickness, bodily infirmity, or imprisonment, he is unable to travel and appear at court, such deposition shall not be used in the cause." This was first enacted in the judiciary act of September 24, 1789, c. 20, § 30, 1 Stat. 90, and it has been in force from that time until now. In *Patapsco Ins. Co.* v. *Southgate*, 5 Pet. 604, 617, it was said, in reference to this provision, that "the act declares expressly that, unless the same (that is, the disability) shall be made to appear on the trial, such deposition shall not be admitted or used in the cause. This inhibition does not extend to the deposition of a witness living at a greater distance from the place of trial than one hundred miles; he being considered permanently beyond a compulsory attendance. The deposition in such case may not always be absolute, for the party against whom it is to be used may prove that the witness has removed within the reach of a *subpœna* after the deposition was taken; and if that fact was known to the party, he would be bound to procure his personal attendance. The *onus*, however, of proving this would rest upon the party opposing the admission of the deposition in evidence. It is, therefore, a deposition taken *de bene esse*." And in *The Samuel*, 1 Wheat. 9, 15, Chief Justice Marshall said, a deposition taken under the statute *de bene esse* "can be read only when the witness himself is unattainable." See also *Harris* v. *Wall*, 7 How. 692, and *Rutherford* v. *Geddes*, 4 Wall. 220, 224. It thus appears to have been established at a very early date that depositions taken *de bene esse* could not be used in any case at the trial if the presence of the witness himself was actually attainable, and the party offering the deposition knew it, or ought to have known it. If the witness lives more than one hundred miles from the place of trial, no *subpœna* need be issued to secure his compulsory attendance. So, too, if he lived more than one hundred

Digitized by Google

miles away when his deposition was taken, it will be presumed that he continued to live there at the time of the trial, and no further proof on that subject need be furnished by the party offering the deposition, unless this presumption shall be overcome by proof from the other side. But if it be overcome, and the party has knowledge of his power to get the witness in time to enable him to secure an attendance at the trial, he must do so, and the deposition will be excluded. Such was this case. While the witness lived more than one hundred miles from the place of trial when his deposition was taken, he was actually in court, ready and able to testify when his testimony was needed at the trial. His deposition, therefore, was not admissible. The rulings of the circuit courts have uniformly been the same way, so far as we know. While some have gone beyond the decision in *Patapsco Ins. Co.* v. *Southgate*, none have fallen short of it. *Lessee of Penns* v. *Ingraham*, 2 Wash. C. C. 487, decided in 1811; *Lessee of Brown* v. *Galloway*, Pet. C. C. 291, 294, decided in 1816; *Pettibone* v. *Derringer*, 4 Wash. C. C. 215, 219, decided in 1818; *Russell* v. *Ashley*, Hemp. 546, 549; *Ward* v. *Armstrong*, 6 McLean, 44.

As to depositions taken under a *dedimus potestatem* in accordance with § 866 of the Revised Statutes, this provision of § 865 does not apply, for it is expressly so enacted in that section. When the statutes of the United States make special provisions as to the competency or admissibility of testimony, they must be followed in the courts of the United States, and not the laws or the practice of the State in which the court is held when they are different. *Potter* v. *National Bank*, 102 U. S. 163, 165; *King* v. *Worthington*, 104 U. S. 44, 50; *Bradley* v. *United States*, 104 U. S. 442; *Ex parte Fisk*, 113 U. S. 713, 721.

The judgment is reversed, and the cause remanded, with directions for a new trial.

Digitized by Google

ASHBY *v.* HALL.

APPEAL FROM THE SUPREME COURT OF THE TERRITORY OF MONTANA.

Argued November 10, 1886. — Decided December 13, 1886.

The entry in the Land Office of a portion of the public lands in the Territory of Montana, settled upon and occupied as a town-site, under the act of Congress of March 2d, 1867, "for the relief of the inhabitants of cities and towns on the public lands," being "in trust for the several use and benefit of the occupants thereof, according to their respective interests; the execution of which trust, as to the disposal of the lots in such town, and the proceeds of the sales thereof, to be conducted under such rules and regulations as may be prescribed by the legislative authority of the State or Territory in which the same may be situated," it was held that the occupant of a lot in the town which had been surveyed and platted into streets, alleys, blocks, and lots, continued to possess after such entry the same right of way over an adjoining alley which he had previously possessed as appurtenant to his lot.

The interests which the occupants possessed previous to the entry, either in the land occupied by them or in rights of way over adjoining streets and alleys, were secured by it.

The power vested in the legislature of the Territory was confined to regulations for the disposal of the lots and the proceeds of the sales. These regulations might extend to provisions for the ascertainment of the nature and extent of the occupancy of different claimants of lots, and the execution and delivery to those found to be occupants in good faith of some official recognition of title in the nature of a conveyance; but they could not authorize any diminution of the rights of the occupants when the extent of their occupancy was established.

The legislature of the Territory could not, under the authority conferred by the above act of Congress, change or close the streets, alleys, and blocks of the town by a new survey. Whatever power it may have over them does not come from the town-site act, but, if it exist at all, from the general grant of legislative power under the organic act of the Territory.

The case is stated in the opinion of the court.

Mr. Eppa Hunton for appellant. *Mr. Jeff. Chandler* was with him on the brief.

No appearance for appellees.

Digitized by Google

Opinion of the Court.

MR. JUSTICE FIELD delivered the opinion of the court.

This case comes from the Supreme Court of Montana. It was a suit to abate an obstruction in an alley in the city of Helena, in that Territory. The plaintiffs are the owners of certain lots in a block bordering on the alley, over which they claim a right of way; an easement which they or their predecessors used and enjoyed from 1866 to 1871, when the defendant caused the obstruction complained of.

In the pleadings and in the findings several facts are assumed to be well known, upon which no information is given; as that the lands within the city of Helena were, in 1869, entered in the local land office, by the probate judge of the county, under the town-site act; and that there was an addition to the original limits of Helena, known as Scott's Addition, within which are the lots owned by the plaintiffs. It would have facilitated the examination of the case if these facts had been stated with some particularity, rather than assumed to be within the knowledge of the court.

The case was brought in one of the District Courts of the Territory, and was, by stipulation of the parties, tried without a jury. The facts as found, so far as they are material, are substantially as follows: In 1866 Scott's Addition to Helena was laid out, surveyed, and platted into streets, blocks, lots, and alleys. The alleys ran through the centre of the blocks, and were sixteen feet in width. The lots of the plaintiffs adjoined one of these alleys, the passage in which was obstructed by a fence placed across it by the defendant. The title to the ground occupied by the town, including the streets and alleys, was in the United States, until the entry of the town-site in 1869. The original occupants of the lots recognized the existence of the alley, as did their grantees and successors in interest, until such entry, and received their deeds bounded thereon. The principal use of the alley was to take in wood and hay for the adjoining occupants, and for the ingress and egress of their cows. The plaintiffs and their predecessors in interest had made valuable improvements upon the lots, to which they held a possessory right at the time of the

Digitized by Google

entry of the town-site. Some time afterwards, a new survey and a map of the town were made, by direction of the probate judge, as trustee, and were approved by the county commissioners. The survey and map did not show the alley in question, and no proceedings were taken to correct them in that particular; and they were filed with the clerk and recorder of the county. In 1871, the defendant entered upon and occupied the land embracing the alley in question; and, in 1872, he received a deed of the same from the probate judge, no adverse claim having been presented.

From the facts, of which the above is a brief statement, the District Court found, as a conclusion of law, that, at the time of the entry of the town-site by the probate judge, the plaintiffs and others, as adjacent lot-owners, had a subsisting and valid right in the alley, and to the use thereof; that the probate judge entered the same in connection with the town-site in trust, with the usual rights and interests therein; that his subsequent conveyance thereof to defendant was void and inoperative; and, therefore, the non-presentation of an adverse claim to defendant's application for the ground was immaterial.

The court, accordingly, adjudged that the plaintiffs were entitled to a right of way over the sixteen feet of ground adjoining their lots, and to the use of it as an alley-way without let or hindrance from the defendant or any one acting under him; and declared that the fence erected across it was a nuisance, to be removed by the sheriff of the county, and that the defendant and his servants be forever enjoined from erecting any fence or other obstruction upon the ground. This decree was affirmed, on appeal, by the Supreme Court of the Territory, and from the judgment of the latter court the case is brought here.

The act of Congress of March 2, 1867, "for the relief of the inhabitants of cities and towns upon the public lands," 14 Stat. 541, c. 177, the substance of which has been carried into the Revised Statutes, § 2387, provided that "Whenever any portion of the public lands have been, or shall be, settled upon and occupied as a town-site, and therefore not subject to entry

Digitized by Google

under the agricultural preëmption laws, it shall be lawful, in case such town shall be incorporated, for the corporate authorities thereof, and if not incorporated, for the judge of the county court for the county in which such town may be situated, to enter at the proper land office, and at the minimum price, the land so settled and occupied in trust for the several use and benefit of the occupants thereof, according to their respective interests; the execution of which trust, as to the disposal of the lots in such town, and the proceeds of the sales thereof, to be conducted under such rules and regulations as may be prescribed by the legislative authority of the State or Territory in which the same may be situated." It also provided that any act of said trustee not made in conformity with the rules and regulations mentioned, should be void.

As thus seen, the act required the entry of land settled upon and occupied, to be in trust "for the several use and benefit of the occupants thereof according to their respective interests." The very notion of land settled upon and occupied as a townsite implies the existence of streets, alleys, lots, and blocks; and for the possession of the lots, and their convenient use and enjoyment, there must of necessity be appurtenant to them a right of way over adjacent streets and alleys. The entry of the land carried with it such a right of way. The streets and alleys were not afterwards at the disposal of the government, except as subject to such easement.

That portion of the town known as Scott's Addition, within which is the alley in controversy, was laid out and platted into streets, alleys, blocks, and lots, as early as 1866; and the lots were occupied, in conformity with that survey and plat, when the entry was made. The right of way, and all appurtenances to the lots, which were held by the occupants under their possessory claims, continued after the entry, and the receipt of their deeds or other evidences of title, as before, with the additional support arising from the change of their possessory claims to estates in fee.

The power vested in the legislature of the Territory in the execution of the trust, upon which the entry was made, was confined to regulations for the disposal of the lots and the pro-

Digitized by Google

ceeds of the sales. These regulations might extend to provisions for the ascertainment of the nature and extent of the occupancy of different claimants of lots, and the execution and delivery to those found to be occupants in good faith of some official recognition of title, in the nature of a conveyance. But they could not authorize any diminution of the rights of the occupants, when the extent of their occupancy was established. The entry was in trust for them, and nothing more was necessary than an official recognition of the extent of their occupancy. Under the authority conferred by the townsite act, the legislature could not change or close the streets, alleys, and blocks of the town by a new survey. Whatever power it may have had over them did not come from that act, but, if it existed at all, from the general grant of legislative power under the organic act of the Territory.

The plaintiffs taking the lots they occupied, with the right of way appurtenant thereto, that is, over the alley on which the lots were situated, which they had previously enjoyed, the action of the probate judge in conveying the alley to the defendant was illegal and void. The intrusion of the defendant thereon was, therefore, a trespass, and the fence erected by him, to bar the passage through it, was a nuisance to be abated.

The judgment of the court below is affirmed.

SUTTER *v.* ROBINSON.

APPEAL FROM THE CIRCUIT COURT OF THE UNITED STATES FOR THE NORTHERN DISTRICT OF ILLINOIS.

Argued December 9, 10, 1886. — Decided December 20, 1886.

A patentee is not at liberty to insist in the courts upon a construction of his patent which the Patent Office required him to expressly abandon and disavow as the condition of the issue of his patent.

Shepard v. *Carriyan*, 116 U. S. 593, affirmed.

Digitized by Google

The improvement in the apparatus for resweating tobacco which was patented to Abraham Robinson, June 10, 1879, by Letters Patent No. 216, 293, consisted in the substitution of a wooden vessel in place of a metallic one for holding the tobacco while being resweated.

Bill in equity for the infringement of letters-patent. The case is stated in the opinion of the court.

Mr. Thomas A. Banning for appellants. *Mr. Ephraim Banning* was with him on the brief.

Mr. John W. Munday for appellees. *Mr. Edmund Adcock* was with him on the brief.

MR. JUSTICE MATTHEWS delivered the opinion of the court.

This is a bill in equity filed by Isaac Robinson and Abraham Robinson against the appellants to restrain an alleged infringement of letters-patent granted by the United States to Abraham Robinson on June 10, 1879, for an improved apparatus for resweating tobacco. The defences relied on are, that the patent is invalid for want of novelty, and a denial of the alleged infringement. The specifications and claims of the patent, with reference to accompanying drawings, [p. 533,] are as follows:

"Figure 1 is a top or plan view of an apparatus embodying my improvements, and Fig. 2 is a vertical central section of the steam-receiver and tobacco-holder.

"Like letters of reference indicate like parts.

"It is usual to soften the leaves of tobacco, as is well known, in order to prepare them for being manufactured into cigars and other manufactured goods, and to bring out a good and uniform color. This has been done heretofore in various ways, and, among others, by dampening the leaves and exposing them to heat while in that condition.

"The object of this invention is to provide improved means for exposing the leaves to the action of steam for the purposes above set forth; and to that end my invention consists of a tobacco-holding vessel made of wood sufficiently porous to permit the steam to percolate through it, in combination, sub-

Digitized by Google

stantially as hereinafter described, with a steam-generating apparatus and a steam-receiving chamber surrounding the vessel for containing the tobacco.

"I am aware that the general structural plan of the apparatus hereinafter described is old, and I do not, therefore, here intend to claim the same independently of a tobacco-receiving vessel made of wood sufficiently porous to permit the steam to percolate through it, as and for the purposes set forth, the said wooden vessel constituting, as I believe, an improvement upon the apparatus heretofore in use, for the reason that, in employing wood instead of metal in the construction of the said vessel, the tobacco is prevented from being tainted, and may be kept continually moist by the action of the steam instead of being merely heated and sweated by it, or steamed only by the generation of steam in the same vessel containing the tobacco, it being obvious that, if the tobacco-receiving vessel be made of metal, as heretofore in devices of this class, the steam in an outer surrounding vessel would merely heat the tobacco and sweat it without imparting new moisture to it. Neither do I here intend to claim the process, as such, of steaming tobacco.

"In the drawings A represents an ordinary boiler for generating steam. B is a tank or vessel for receiving the steam generated by the boiler A. C is a tight wooden vessel for receiving the tobacco to be treated. This vessel should be provided with a tight-fitting cover, *a*. I make the vessel C of wood, as an essential feature of my invention, in order that the steam may sweat or percolate through it from the tank B, and so that the tobacco will not be tainted by contact with metal. The vessel C is enough smaller than the tank B to be suspended in the latter and leave an annular space, *b*, between the two, as well as a space underneath the bottom of the vessel C, as shown. The space *b* should also be covered. In order to provide a cover for the space *b*, and also suspend the vessel C firmly in the tank B, I employ an annular rim or lid, *c*, having an upwardly-turned flange, *c'*, fitted to the vessel C, and a downwardly-turned flange, *c''*, fitted to the tank B, screws or other fastenings passing through the flanges into the parts

Digitized by Google

to which they are fitted; but it is not essential that these flanges should be continuous or extend entirely around the vessels. Neither is it essential that the flanged portions of the lid *c* should be continuous, or in the same piece with the re-

Fig. 1.

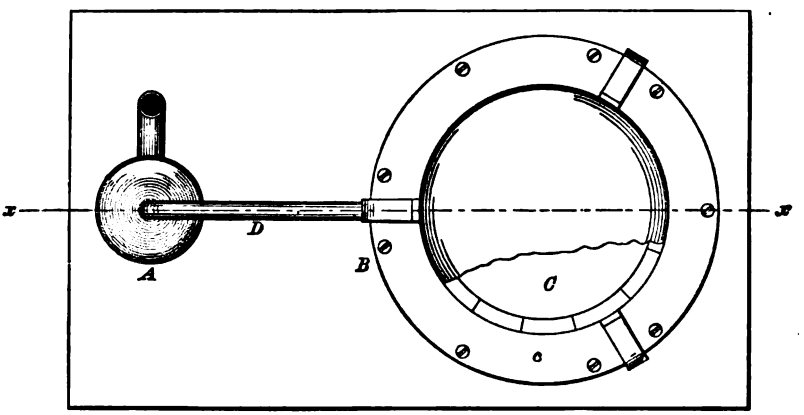

Fig. 1.

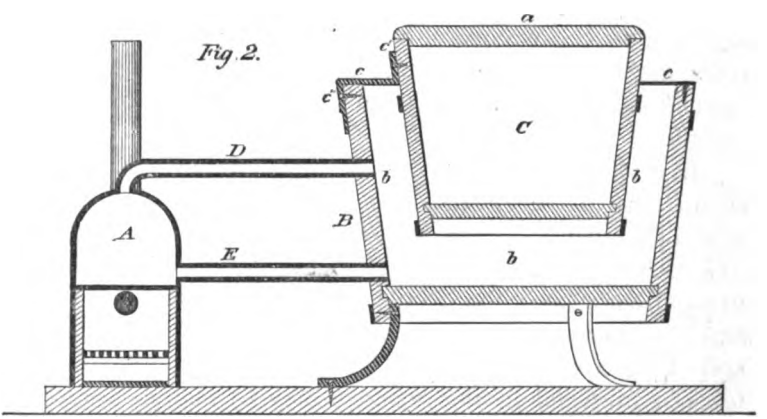

maining part of the said lid. It is, in fact, much the easier way to make the flanged portions separately from the lid proper, and I have represented them as made in that manner.

"I do not, however, here intend to be restricted to any particular way of applying the lid *c* and suspending the vessel C,

Digitized by Google

as both may be done in various suitable ways; but I deem the manner shown to be the best.

"D is a steam-pipe leading from the upper part of the boiler A into the upper part of the space *b*, and E is a water-pipe leading from the lower part of the said space into the lower part of the boiler. To use this apparatus for the purpose for which it is intended, the water in the boiler should be heated until steam is generated. The tobacco to be treated should be placed in the vessel C and covered, the tobacco being then in the condition in which it exists when taken from the cases or packages in which it may have been packed by the producers or shippers.

"The water, as well as the steam, will enter the space *b* and produce a sufficient temperature in the vessel C to sweat the tobacco therein, the steam producing moisture in the vessel C by sweating or percolating through it from the space *b* in addition to the moisture originally in the tobacco before it was confined in the vessel. The steam which enters the space *b* through the pipe D, finding a lower temperature in the said space than in the boiler, becomes condensed, and is added or returned to the volume of water which flows from the said space into the boiler, and thus keeps the latter supplied. A circulation of water and steam is also kept up to a certain extent.

"In a building where steam is supplied through pipes, the steam may be conducted into the space *b* from the boiler which supplies the steam, wherever the boiler may be situated. The tobacco should be exposed to this treatment from three to eight days, according to the result desired to be produced, and it will thus be rendered soft and pliable, and of a uniform and dark color, without being in any way injured. The tobacco prepared in this manner may be manufactured into various articles, like cigars and cigarettes.

"I deem it preferable to make the tank B, as well as the tank C, of wood, so as to prevent tainting the tobacco, and so as to render the apparatus capable of treating large quantities of tobacco at the same time, and without making the apparatus heavy and expensive, and to employ a boiler wholly de-

Digitized by Google

tached from the tank B, excepting by the steam and water pipes connecting the same, thus enabling me to make the outer or larger tank of wood without exposing it to danger from fire. A detached boiler amply sufficient to be employed in connection with very large tanks will be comparatively simple and cheap.

"Having thus described my invention, what I claim as new, and desire to secure by letters-patent, is —

"1. The apparatus, substantially as described, for treating tobacco, to wit: The tight vessel or tank B, the tight vessel C, made of wood and suspended in the tank B, and a steam-generator or heater, all combined and operating together, substantially as and for the purposes specified.

"2. The combination of the boiler A, the tight tank B, made of wood, the tight vessel C, made of wood and suspended in the tank B, and the pipes D and E entering the tank B and the boiler, all arranged and operating substantially as and for the purposes specified."

On the hearing in the Circuit Court it was found, upon the evidence, that the device used by the defendants differed from that of the complainants, as described in the patent, only in this respect, that the defendants' tobacco-holder is not made tight so as to exclude moisture except through the pores of the wood; the defendants using the ordinary tobacco cases in which the leaf tobacco comes packed, to hold the tobacco during the process of resweating. It was contended on the part of the defendants that this was a substantial difference, because the complainants' claim required their tobacco-holder to be tight while that of the defendants was not. In disposing of the case upon this point, the judge holding the Circuit Court, in his opinion, said: "The essential feature of complainants' invention consists in subjecting the mass of leaf tobacco to moisture and heat in a comparatively close wooden box for a sufficient time to have it undergo the process of resweating, and it is no answer to complainants' charge of infringement of their patent to say that defendants' box is not quite so tight as that complainants deem desirable or necessary for the most satisfactory operation of their device." *Robinson* v. *Sutter*, 10 Bissell, 100; *S. C.* 8 Fed Rep. 828.

Digitized by Google

The issue as to novelty, upon the proof, was also decided against the defendants, for the reason that the two devices relied upon — one described in the Oppelt patent of June 16, 1874, and the other in the Wenderoth patent of July 16, 1878 — both use metal tanks and a metal tobacco-holder. It was shown that contact with metal taints and injures the tobacco operated upon, and that the free admission of steam wets and to some extent cooks the tobacco; and the conclusion of the Circuit Court was, that "the porous wooden tobacco-holder devised by Robinson seems, from the proof, to stimulate that slow fermentation and action in the constituent elements of the leaf which is required to make the whole mass homogeneous."

Upon a showing made by the defendants, a rehearing of the cause was granted, and further proofs taken. Upon that hearing it was made clearly to appear, from the testimony, that the artificial resweating of tobacco had been effected long prior to the application for the complainants' patent, by means of the application of steam in a chamber adapted for that purpose, applied to the tobacco while in the ordinary tobacco cases in which the leaf tobacco comes packed, just as the defendants were found to have practised. The case, however, was decided against the defendants upon another ground, as appears from the opinion of the judge holding the Circuit Court. *Robinson* v. *Sutter*, 11 Fed. Rep. 798. He said: "The distinctive feature of complainants' device for resweating tobacco is the water tank in the bottom of their outer chamber, so that, by keeping this water at the proper temperature, the atmosphere of the outer chamber can be kept warm and humid, whereby the process of resweating will be induced and carried on to whatever extent shall be deemed desirable." The devices used prior to Robinson's invention, and proven as anticipations, which would avoid his patent for want of novelty, were found not to meet that point in the description of the complainants' device, inasmuch as the outer tank in each, into which the steam entered for the purpose of heating and moistening the tobacco, had specific provision made in it for drawing off the water formed by condensation of the steam, instead

Digitized by Google

of being arranged so as to hold a body of water in order to equalize and maintain the temperature of the vapor in the room or tank.

The defendants had also introduced in evidence, as an anticipation, a patent granted in 1865 to one Huse. His invention is described in his specification as follows:

"I take the tobacco, by preference, after it has been desiccated and packed in the usual manner in hogsheads or cases, and which it is well known are not by any means so close as to exclude steam. I place these hogsheads or cases, or both, in a chamber of convenient size, and which can be closed up steam-tight, and I then introduce heat and moisture by means of steam apparatus, such as generally employed for heating buildings, the coils or congeries of pipe being arranged in any suitable manner for a proper distribution of the heat. Some of the pipes, about one half of them, are to be pierced with very small holes, to permit the escape of steam into the chamber. It will be found best to raise and maintain the temperature at about 150 degrees Fahrenheit, and for about forty-eight hours for tobacco which has been well desiccated, a longer time being required when treated before it has been well dried. At the end of the time specified, the tobacco should be examined, and, so soon as nicotine is well developed, which will be indicated by the evolution of ammonia, the steam must be shut off, the chamber opened, the hogsheads or cases opened, the tobacco all opened and shaken and thoroughly dried, which is best done in an open and well-ventilated room; and after it has been well dried the tobacco will be found to be thoroughly cured and ready for use, and further fermentation so completely stopped that it can be repacked and kept for any desired length of time.

"In this way I avoid all the evil consequences of the method heretofore practised, while at the same time it will enable the planter to put his crop of tobacco in market in a comparatively short space of time.

"What I claim as my invention, and desire to secure by letters-patent, is the process, substantially as herein described, of curing tobacco, which process consists in subjecting it to

Digitized by Google

the action of artificial heat and steam to induce the required fermentation until nicotine is evolved, and then stopping the further progress of fermentation by opening the packages and thoroughly drying every part, substantially as described."

In respect to this, the Circuit Court said: "As for the Huse patent of 1865, it was only a box heated with steam-coils, in which the tobacco was to be placed and heated by the radiation of heat from the pipes and the introduction of live steam." 11 Fed. Rep. 798.

There was, accordingly, a decree entered in favor of the complainants for an injunction, and for the recovery of $3309.30 damages found by the master. The defendants have brought the present appeal.

It sufficiently appears from the evidence, that, if the essential and sole characteristic of the complainants' invention consists in a substitution of a close wooden box, to hold the tobacco while being subjected to the process of resweating, for metal tobacco-holders previously in use, either the practice of the defendants in using as a tobacco-holder the ordinary tobacco cases in which the leaf tobacco comes packed, during the process of resweating, is not an infringement, or, if it be so held, the complainants' invention was anticipated by others long prior to its date. This is shown by the Huse patent, and it is proven to have been employed by others, particularly by Louis Specht in the tobacco factory of August Beck & Co., in Chicago.

It only becomes important, therefore, to consider the ground finally taken in support of the decree, which involves the question whether the appellees are entitled to claim the water tank in the bottom of the outer chamber, and the use of water in it, whereby the atmosphere of the outer chamber can be kept warm and humid, so that the process of resweating may be induced and carried on to any desirable extent. In this connection it becomes important to consider the proceedings in the Patent Office in the granting of the patent, as shown by the file-wrapper. It appears from the transcript of the record in the case that the defendants offered in evidence a copy of this file-wrapper and contents, which was objected to as incom-

Digitized by Google

petent and not sufficiently verified. No ruling of the Circuit Court seems to have been made upon the objection, and the paper, although described as marked, "Defendants' exhibit, copy of the file-wrapper and contents of the Robinson patent," is not certified as a part of the evidence, and is not contained in the transcript. It does not, therefore, appear that the paper was ever before the court below, or considered by it in the hearing of the case. In this court, however, on the hearing, by consent of parties, the file-wrapper and contents were ordered to be made a part of the record. From that paper it appears that the original specification, on which the application for a patent was based, declared that the petitioner had invented certain new and useful improvements in the method as well as apparatus for steaming leaf tobacco. In setting out the object of the invention, he said: "The object of this invention is to provide suitable means whereby the leaves may be subjected to the process of sweating by means of steam or water under the influence of heat, and to that end my invention consists of that process and in the apparatus by means of which I carry on the said process, substantially as hereinafter specified."

It was also stated, that "B is a tank or vessel for containing water and receiving the steam generated by the boiler A;" and that "steam may also be generated in the space by filling the latter partly with water, and by applying heat directly to the bottom of the tank B. A good result will be accomplished by keeping the water hot, though not to a degree sufficient to generate steam to any appreciable extent." The claims were set out as follows:

"First. The method or art, substantially as described, of treating tobacco, to wit, by placing the leaves in a tight vessel surrounded or partly surrounded by a chamber for containing water, and subjecting the tobacco to heat by heating the water in the said chamber, and keeping it to the proper temperature by means of heat applied to the said chamber continuously during the operation of sweating the leaves, substantially as and for the purpose specified.

"Second. The method or art, substantially as specified, of

Digitized by Google

treating tobacco, to wit, by placing the leaves in a tight vessel surrounded by a steam and water-tight chamber, and by introducing steam into the said chamber, substantially as and for the purpose specified.

"Third. The apparatus, substantially as described, for treating tobacco, to wit, the tight vessel or tank B, the tight vessel C, made of wood and suspended in the tank B, and a steam generator or heater, all combined and operating together, substantially as and for the purpose specified.

"Fourth. The combination of the boiler A, the tight tank B, made of wood, the tight vessel C, made of wood and suspended in the tank B, and the pipes D and E entering the tank B and the boiler, all arranged and operating substantially as and for the purpose specified."

This application was filed on the 28th of February, 1879, and rejected by the Patent Office on the 6th of March, 1879.

Thereupon the applicant filed certain amendments to his specification, by striking out everything that related to the method or process for steaming leaf tobacco, and all that had reference to the use of water under the influence of heat, as contained in the tank B, and the first two claims. Amendments were also made by inserting other parts of the specification as it now stands; amongst others, the following: "I make the vessel C of wood, as an essential feature of my invention, in order that the steam may sweat or percolate through it from the tank B, and so that the tobacco will not be tainted by contact with the metal." And also the following: "The steam producing moisture in the vessel C, by sweating or percolating through it from the space *b*, in addition to the moisture originally in the tobacco before it was confined in the vessel."

On the 10th of April, 1879, the examiner informed the applicant that he "should specifically set forth that the structural plan of the device is old, and that the improvement consists alone in making the vessel C of wood instead of metal, and sufficiently porous to permit the steam to percolate through it."

Thereupon the applicant filed an amendment by inserting

Digitized by Google

the following: "I am aware that the general structural plan of the apparatus hereinbefore described is old, excepting that the vessel C for receiving the tobacco has not, so far as I am aware, heretofore been made of wood, but of metal. The making of the vessel C of wood, and sufficiently porous to permit the steam to percolate through it, constitutes the essential feature of this invention. When metallic vessels are employed to receive the tobacco, it is liable to be tainted, and in such cases is merely heated, but not subjected to the moistening influence of steam or vapor percolating through the vessel containing the tobacco, as when this vessel is made of wood sufficiently porous to admit of that result. I do not, therefore, here intend to claim the general structural plan of the said apparatus independently of a vessel, C, made of wood, sufficiently porous to allow the steam to percolate through it."

On the 24th of April, 1879, the examiner wrote to the applicant as follows: "The specification should be amended by omitting all statements that the applicant has an improved process or is the inventor of such. . . . The statement of invention, and reference to the state of the art, both require correction, as the invention is an improved apparatus only."

Thereupon further amendments were made, resulting in the specification and claims as they now stand, and the patent was granted.

A comparison of the patent as granted with the application very conclusively establishes the limits within which the patentee's claims must be confined. He is not at liberty now to insist upon a construction of his patent which will include what he was expressly required to abandon and disavow as a condition of the grant. *Shepard* v. *Carrigan*, 116 U. S. 593, and cases there cited. It appears, therefore, distinctly that the patentee has no claim for a process of steaming tobacco by means of steam, or steam and a body of hot water, nor by any process whatever. His invention must be limited to the apparatus, and as to that he was expressly required to state that its structural plan was old and not of his invention. What is meant by the structural plan of the apparatus is the arrangement of the vessels for holding the tobacco, for con-

Digitized by Google

fining the steam and water, and for supplying the steam; and the precise improvement which is alone the subject of the patent is the substitution of a wooden vessel for holding the tobacco while being resweated in place of a metallic one. So that the ultimate question in the case is reduced to this, whether, in such an apparatus, the use of the cases, or boxes, or packages, in which the tobacco leaves are originally packed by the producer is equivalent to the wooden tobacco-holder mentioned in the complainants' specification. If it is not, there is no infringement; if it is, as we have already seen, it had been anticipated for many years by the practice of other persons. It is expressly described in the Huse patent of 1865, where the inventor states, as follows: "I take the tobacco, by preference, after it has been desiccated and packed in the usual manner in hogsheads or cases, and which it is well known are not by any means so close as to exclude steam. I place these hogsheads or cases, or both, in a chamber of convenient size, and which can be closed up steam-tight, and I then introduce heat and moisture by means of steam apparatus, such as generally employed for heating buildings, the coils or congeries of pipe being arranged in any suitable manner for a proper distribution of the heat. Some of the pipes, about one half of them, are to be pierced with very small holes to permit the escape of steam into the chamber." And the same thing was done at the establishment of August Beck & Co., in Chicago, before the date of Robinson's application, and by several others.

For these reasons we are of opinion that the decree below was erroneous.

It is, therefore, reversed, and the cause remanded, with instructions to dismiss the bill.

Digitized by Google

HUSE v. GLOVER.

APPEAL FROM THE CIRCUIT COURT OF THE UNITED STATES FOR THE NORTHERN DISTRICT OF ILLINOIS.

Argued December 10, 1886. — Decided December 20, 1886.

The provision in the ordinance of 1787 that the navigable waters leading into the Mississippi and the St. Lawrence shall be common highways, forever free, without tax, impost, or duty therefor, refers to rivers in their natural state, and does not prevent the State of Illinois from improving the navigation of such waters within its limits, or from charging and collecting reasonable tolls from vessels using the artificial improvements as a compensation for the use of those facilities.

Escanaba Co. v. *Chicago*, 107 U. S. 678, restated and affirmed, and applied to this case.

A river does not change its legal character as a highway if crossings by bridges or ferries are allowed under reasonable conditions, or if dams are erected under like conditions.

Cardwell v. *American Bridge Co.*, 113 U. S. 205, and *Hamilton* v. *Vicksburg, &c., Railroad, ante*, 280, affirmed.

If, in the opinion of a State, its commerce will be more benefited by improving a navigable stream within its borders, than by leaving the same in its natural state, it may authorize the improvements, although increased inconvenience and expense may thereby attend the business of individuals.

A "duty of tonnage," within the meaning of the Constitution, is a charge upon a vessel, according to its tonnage, as an instrument of commerce, for entering or leaving a port, or navigating the public waters of the country.

This was a bill in equity to prevent certain officers of the State of Illinois from exacting tolls upon the vessels of the complainants passing through the improved waters of the Illinois River. Respondents demurred, and the bill was dismissed on the demurrer. Complainants appealed. The case is stated in the opinion of the court.

Mr. G. S. Eldredge for appellants.

Mr. George Hunt, Attorney General of the State of Illinois, for appellees.

Digitized by Google

Opinion of the Court.

MR. JUSTICE FIELD delivered the opinion of the court.

This case comes from the Circuit Court for the Northern District of Illinois. It was heard there and decided on demurrer to the bill of complaint. The substance of the bill is this: That by various acts of her legislature, commencing with one passed in February, 1867, the State of Illinois adopted measures for improving the navigation of Illinois River, including the construction of a lock and dam at Henry, and at Copperas Creek on the river. She created a board of canal commissioners, and invested it with authority to superintend the construction of the locks and dams, to control and manage them after their construction, and to prescribe reasonable rates of toll for the passage of vessels through the locks. By a clause in one of the acts it was provided that all tolls received for the use of the locks, not necessary to keep the same in repair, and to pay the expenses of their collection, should be "paid quarterly into the State treasury as part of the general revenue of the State." Laws of Illinois of 1872, 213, 214.

The works were constructed at an expense of several hundred thousand dollars, which was principally borne by the State. It is represented that a small portion was contributed by the United States. Those at Henry were completed in 1872; those at Copperas Creek in 1877; and the commissioners prescribed rates of toll for the passage of vessels through the locks, the rates being fixed per ton, according to the tonnage measurement of the vessels and the amount of freight carried.

The complainants, citizens of Illinois, composing the firm of Huse, Loomis & Co., are engaged, and have been, since their organization in 1864, in cutting ice at Peru and at other points on the Illinois River, and in transporting it on that river, and thence by the Mississippi and other navigable streams to St. Louis, Memphis, and other Southern markets; and in connection therewith are carrying on a general transportation business, using constantly from three to six steamboats, and from thirty to sixty barges, varying from 125 to 1000 tons, all

Digitized by Google

licensed and registered under the act of Congress. They allege in the bill, that prior to the construction of the dam across the Illinois River at Henry, they were able to navigate the river without interruption, except such as was incident to its ordinary use in its natural state; that the dams at that place and at Copperas Creek are impediments to the free navigation of the river; that while an additional depth of water is created above them, no practical advantage ensues to the complainants, for they encounter below the dams the same stage of water they would have without them; that the dams are so constructed as to wholly impede, except at extreme high water, the navigation of the river by steamboats and other vessels which were previously accustomed to navigate it, unless they pass through the locks; that from the construction of the lock and dam at Henry in 1872 to the spring of 1878, they have paid as duties or charges upon the tonnage measurement of their steamboats and other vessels about three thousand dollars, and for tolls imposed upon the cargoes of ice transported by them about five thousand dollars; that upon subsequent shipments similar charges have been exacted, as also for the passage of their boats and barges through the lock at Copperas Creek. And they allege that they are advised and believe that the imposition of the tolls and tonnage duties mentioned is in violation: first, of the provision of article four of the ordinance for the government of the territory of the United States northwest of the Ohio River, passed July 13, 1787, which provides, that "the navigable waters leading into the Mississippi and St. Lawrence, and the carrying places between the same, shall be common highways, and forever free, as well to the inhabitants of the said territory as to the citizens of the United States, and those of any other States that may be admitted into the confederacy, without any tax, impost, or duty therefor;" and, second, of the article of the Constitution of the United States which prohibits the imposing of a tonnage duty by any State without the consent of Congress. Art. 1, § 10. They, therefore, pray that the defendants, who are canal commissioners, and all persons acting under them, may be restrained from exacting any ton-

Digitized by Google

nage duties or other charges for the passage of their steamboats or barges, and other vessels used by them in navigating the Illinois River, or from interfering in any manner with the free and uninterrupted navigation of the river by them in the usual course of their business.

The questions thus urged upon the consideration of the court below are pressed here; but they are neither new nor difficult of solution. The opinion of that court presents in a clear and satisfactory manner the full answer to them, and nothing can be added to the force of its reasoning. In affirming its conclusions, we can do little more than repeat its argument. *Huse* v. *Glover*, 11 Bissell, 550.

The fourth section of the ordinance for the government of the northwestern territory was the subject of consideration in *Escanaba Co.* v. *Chicago*, 107 U. S. 678. We there said that the ordinance was passed before the Constitution took effect; that although it appears by various acts of Congress to have been afterwards treated as in force in the territory, except as modified by them, and the act enabling the people of Illinois Territory to form a Constitution and State government, and the resolution of Congress admitting the State into the Union, referred to the principles of the ordinance, according to which the Constitution was to be formed, its provisions could not control the powers and authority of the State after her admission; that whatever the limitation of her powers as a government whilst in a territorial condition, whether from the ordinance of 1787 or the legislation of Congress, it ceased to have any operative force, except as voluntarily adopted by her after she became a State of the Union; that on her admission she at once became entitled to and possessed of all the rights of dominion and sovereignty which belonged to the original States; that the language of the resolution admitting her was, that she is "admitted into the Union on an equal footing with the original States in all respects whatever;" and that she could, therefore, afterwards exercise the same powers over rivers within her limits as Delaware exercised over Blackbird Creek, and Pennsylvania over Schuylkill River. *Pollard* v. *Hagan*, 3 How. 212; *Permoli* v. *New Orleans*, 3 How. 589; *Strader* v. *Graham*, 10 How. 82.

Digitized by Google

We also held, in that case, that, independently of these considerations, the terms of the ordinance were not violated because the navigable streams were subject to such crossings as the public necessities and convenience might require. The rivers did not change their character as common highways, if the crossings were allowed under reasonable conditions, and so as not unnecessarily to obstruct them. The erection of bridges with dams, and the establishment of ferries for the transit of persons and property, are consistent with the free navigation of the rivers; and in support of this doctrine we referred to the case of *Palmer* v. *Cuyahoga County*, 3 McLean, 226, 227, where Mr. Justice McLean, speaking of the provision of the ordinance, said: "This provision does not prevent a state from improving the navigableness of these waters by removing obstructions, or by dams and locks so increasing the depth of the water as to extend the line of navigation. Nor does the ordinance prohibit the construction of any work on the river which the state may consider important to commercial intercourse. A dam may be thrown over the river, provided a lock is so constructed as to permit boats to pass with little or no delay, and without charge. A temporary delay, such as passing a lock, could not be considered as an obstruction prohibited by the ordinance."

Since the decision in the Escanaba case, we have had our attention repeatedly called to the terms of this clause in the ordinance of 1787. A similar clause as to their navigable rivers is found in the acts providing for the admission of California, Wisconsin, and Louisiana. The clause in the act providing for the admission of California was considered in *Cardwell* v. *American Bridge Company*, 113 U. S. 205. We there held that it did not impair the power which the State could have exercised over its rivers had the clause not existed; and that its object was to preserve the rivers as highways equally open to all persons without preference to any, and unobstructed by duties or tolls, and thus prevent the use of the navigable streams by private parties to the exclusion of the public, and the exaction of toll for their navigation. The same doctrine we have reiterated at the present term of the

Digitized by Google

court in construing a similar clause in the act for the admission of Louisiana. *Hamilton* v. *Vicksburg, Shreveport & Pacific Railroad*, *ante*, 280. As thus construed the clause would prevent any exclusive use of the navigable waters of the State — a possible farming out of the privilege of navigating them to particular individuals, classes, or corporations, or by vessels of a particular character. That the apprehension of such a monopoly was not unfounded, is evident from the history of legislation since. The State of New York at one time endeavored to confer upon Livingston and Fulton the exclusive right to navigate the waters within its jurisdiction by vessels propelled in whole or in part by steam.

The exaction of tolls for passage through the locks is as compensation for the use of artificial facilities constructed, not as an impost upon the navigation of the stream. The provision of the clause that the navigable streams should be highways without any tax, impost, or duty, has reference to their navigation in their natural state. It did not contemplate that such navigation might not be improved by artificial means, by the removal of obstructions, or by the making of dams for deepening the waters, or by turning into the rivers waters from other streams to increase their depth. For outlays caused by such works the State may exact reasonable tolls. They are like charges for the use of wharves and docks constructed to facilitate the landing of persons and freight, and the taking them on board, or for the repair of vessels.

The State is interested in the domestic as well as in the inter-state and foreign commerce conducted on the Illinois River, and to increase its facilities, and thus augment its growth, it has full power. It is only when, in the judgment of Congress, its action is deemed to encroach upon the navigation of the river as a means of inter-state and foreign commerce, that that body may interfere and control or supersede it. If, in the opinion of the State, greater benefit would result to her commerce by the improvements made, than by leaving the river in its natural state — and on that point the State must necessarily determine for itself — it may authorize them, although increased inconvenience and expense may

Digitized by Google

thereby result to the business of individuals. The private inconvenience must yield to the public good. The opening of a new highway, or the improvement of an old one, the building of a railroad, and many other works, in which the public is interested, may materially diminish business in certain quarters and increase it in others; yet, for the loss resulting, the sufferers have no legal ground of complaint. How the highways of a State, whether on land or by water, shall be best improved for the public good is a matter for State determination, subject always to the right of Congress to interpose in the cases mentioned. *Spooner* v. *McConnell*, 1 McLean, 337; *Kellogg* v. *Union Co.*, 12 Conn. 7; *Thames Bank* v. *Lovell*, 18 Conn. 500; *S. C.* 46 Am. Dec. 332; *McReynolds* v. *Smallhouse*, 8 Bush, 447.

By the terms tax, impost, and duty, mentioned in the ordinance, is meant a charge for the use of the government, not compensation for improvements. The fact that if any surplus remains from the tolls, over what is used to keep the locks in repair, and for their collection, it is to be paid into the State treasury as a part of the revenue of the State, does not change the character of the toll or impost. In prescribing the rates it would be impossible to state in advance what the tolls would amount to in the aggregate. That would depend upon the extent of business done, that is, the number of vessels and amount of freight which may pass through the locks. Some disposition of the surplus is necessary until its use shall be required, and it may as well be placed in the State treasury, and probably better, than anywhere else.

Nor is there anything in the objection that the rates of toll are prescribed by the commissioners according to the tonnage of the vessels, and the amount of freight carried by them through the locks. This is simply a mode of fixing the rate according to the size of the vessel and the amount of property it carries, and in no sense is a duty of tonnage within the prohibition of the Constitution. A duty of tonnage within the meaning of the Constitution is a charge upon a vessel, according to its tonnage, as an instrument of commerce, for entering or leaving a port, or navigating the public waters of the

Digitized by Google

country; and the prohibition was designed to prevent the States from imposing hindrances of this kind to commerce carried on by vessels.

In *Packet Company* v. *Keokuk*, 95 U. S. 80, 84, that city was authorized by its charter to make wharves on the banks of the navigable river upon which it is situated, and to collect and regulate wharfage, the rates being proportioned to the tonnage of the vessel; and the court held that the charge was not subject to the objection that it was a duty of tonnage within the prohibition of the Constitution. It said: "A charge for services rendered, or for conveniences provided, is in no sense a tax or a duty. It is not a hindrance or impediment to free navigation. The prohibition to the State against the imposition of a duty of tonnage was designed to guard against local hindrances to trade and carriage by vessels, not to relieve them from liability to claims for assistance rendered and facilities furnished for trade and commerce. It is a tax or a duty that is prohibited: something imposed by virtue of sovereignty, not claimed in right of proprietorship. Wharfage is of the latter character. Providing a wharf to which vessels may make fast, or at which they may conveniently load or unload, is rendering them a service." And in *Transportation Co.* v. *Parkersburgh*, 107 U. S. 691, 696, 698, speaking of a charge of wharfage according to the tonnage of a vessel, and a duty of tonnage prohibited by the Constitution, the court said: "They are not the same thing; a duty of tonnage is a charge for the privilege of entering, or trading or lying in, a port or harbor; wharfage is a charge for the use of a wharf." And again, "The fact that the rates (of wharfage) charged are graduated by the size or tonnage of the vessel is of no consequence in this connection. This does not make it a duty of tonnage in the sense of the Constitution and the acts of Congress." *Cannon* v. *New Orleans*, 20 Wall. 577; *Packet Company* v. *Catlettsburg*, 105 U. S. 559.

It is unnecessary to pursue the subject further. We do not see any objections that would justify a disturbance of the decree below, which is accordingly

Affirmed.

Digitized by Google

GOETZ v. BANK OF KANSAS CITY.

ERROR TO THE CIRCUIT COURT OF THE UNITED STATES FOR THE EASTERN DISTRICT OF WISCONSIN.

Argued November 24, 29, 1886. — Decided January 10, 1887.

The acceptor of a bill of exchange discounted by a bank with a bill of lading attached which the acceptor and the bank regard as genuine at the time of the acceptance, but which turns out to be a forgery, is bound to pay the bill to the bank at maturity.

The bad faith in the taker of negotiable paper which will defeat a recovery by him must be something more than a failure to inquire into the consideration upon which it was made or accepted, because of rumors or general reputation as to the bad character of the maker or drawer.

In an action against the acceptor of a bill of exchange, with alleged fictitious bills of lading attached, articles from newspapers touching the drawer as to other drafts with like bills attached were properly excluded as having no connection with the transaction in controversy, it not appearing that the holder ever saw them.

Evidence of declarations of an agent as to past transaction of his principal is inadmissible, as mere hearsay.

In an action by a bank against the acceptor upon a draft discounted by the bank with a fraudulent bill of lading attached, the president of the bank, as a witness for it, having testified that he was ignorant of the forgeries, and also of the circumstances attending other drafts by the drawer with forged bills of lading attached which had been discounted by the bank, and that he could only explain why pains were not taken in the matter by explaining the usage of the bank, it is competent for the court to receive such explanation of the usage.

This was an action against the plaintiff in error, the acceptor of bills of exchange with forged bills of lading attached, which had been discounted by the defendant in error, and presented for acceptance without knowledge of the fraud in either party. Judgment for defendant, to review which this writ of error was sued out. The case is stated in the opinion of the court.

Mr. F. W. Cotzhausen, for plaintiff in error, cited: *Baylis* v. *Travellers' Ins. Co.*, 113 U. S. 316; *Burnside* v. *Grand Trunk Railway*, 47 N. H. 554; *Xenia Bank* v. *Stewart*, 114 U. S.

Digitized by Google

224; *Hoffman* v. *Bank of Milwaukee*, 12 Wall. 181; *Goodman* v. *Simonds*, 20 How. 343; *Bank of Commerce* v. *Union Bank*, 3 N. Y. (3 Comst.) 230; *Canal Bank* v. *Bank of Albany*, 1 Hill, 287; *Bank of Commerce* v. *Merchants' Bank*, 91 U. S. 92; *Lowry* v. *Commercial Bank*, Taney's Dec. 310; *United States* v. *Bank of Metropolis*, 15 Pet. 377; *Stewart* v. *Lansing*, 104 U. S. 505; *Duerson* v. *Alsop*, 27 Gratt. 229; *Smith* v. *Sac County*, 11 Wall. 139; *Clark* v. *Pease*, 41 N. H. 414; *Solomons* v. *Bank of England*, 13 East, 135 n.; *Gill* v. *Cubit*, 4 B. & C. 466; *People* v. *Howell*, 4 Johns. 296; *Uther* v. *Rich*, 10 Ad. & El. 784; *Carroll* v. *Hayward*, 124 Mass. 120; *Jones* v. *Gordon*, 2 App. Cas. 616; *Raphael* v. *Bank of England*, 17 C. B. 161; *Andrews* v. *Pond*, 13 Pet. 65; *Fowler* v. *Brantly*, 14 Pet. 318.

Mr. Oliver H. Dean, for defendant in error, (*Mr. William Warner* and *Mr. James Hagermann* were with him on his brief,) cited: *Hoffman* v. *Bank of Milwaukee*, 12 Wall. 181; *Craig* v. *Sibbett*, 15 Penn. St. 238; *Thiedemann* v. *Goldschmidt*, 1 De G. F. & J. 4; *Leather* v. *Simpson*, L. R. 11 Eq. 398; *First Nat. Bank* v. *Burkham*, 32 Mich. 328; *United States* v. *Bank of Metropolis*, 15 Pet. 377; *Young* v. *Lehman*, 63 Ala. 519; *Park Bank* v. *Ninth Nat. Bank*, 46 N. Y. 77; *Goddard* v. *Merchants' Bank*, 4 N. Y. (4 Comst.) 147; *Bank of Commerce* v. *Union Bank*, 3 N. Y. (3 Comst.) 230; *Bank of the United States* v. *Bank of Georgia*, 10 Wheat. 333; *Price* v. *Neal*, 3 Burrow, 1354; *Goodman* v. *Simonds*, 20 How. 343; *Murray* v. *Lardner*, 2 Wall. 110; *Hotchkiss* v. *Nat. Bank*, 21 Wall. 354; *Collins* v. *Gilbert*, 94 U. S. 753; *Shaw* v. *Railroad Co.*, 101 U. S. 557; *Swift* v. *Smith*, 102 U. S. 442; *Belmont Branch Bank* v. *Hoge*, 35 N. Y. 65; *Hamilton* v. *Marks*, 63 Missouri, 167; *Sweeney* v. *Easter*, 1 Wall. 166; *First Nat. Bank* v. *Reno County Bank*, 1 M'Crary, 491; *White* v. *National Bank*, 102 U. S. 658; *The Sallie Magee*, 3 Wall. 451; *Hannum* v. *Richardson*, 48 Vt. 508; *Bank* v. *Steward*, 37 Maine, 519; *Luby* v. *Railroad Co.*, 17 N. Y. 131; *Clough* v. *Packing Co.*, 20 Wall. 528; *Hazleton* v. *Union Bank*, 32 Wis. 34; *Randall* v. *Telegraph Co.*, 54 Wis. 140; *Adams* v. *Hanni-*

Digitized by Google

bal & St. Jos. Railroad, 74 Missouri, 553; *Ladd* v. *Couzins*, 35 Missouri, 513; *Bacon* v. *Charlton*, 7 Cush. 581; *Lund* v. *Tyngsborough*, 9 Cush. 36; *Baptist Church* v. *Brooklyn Fire Ins. Co.*, 28 N. Y. 153.

Mr. B. K. Miller also filed a brief for defendant in error.

Mr. Justice Field delivered the opinion of the court.

In October, 1861, the plaintiffs in error, Goetz and Luening, were partners in the business of buying and selling hides on commission, at Milwaukee, Wisconsin. At that time one Du Bois was a dealer in hides at Kansas City, Missouri. On the tenth of that month Du Bois telegraphed to them from Kansas City, inquiring what they could sell four hundred green salt hides for; and what they would advance on a bill of lading of the shipment. The firm answered by telegram, stating the market price of light hides on that day, and that they would pay a draft "for two thirds value, bill of lading attached." On the same day, the firm sent a letter to Du Bois, repeating the message, and adding that if the hides were in good condition and number one, they could sell them readily; that their commission was two and a half per cent.; and that they would sell all hides that he might ship to the market at Milwaukee. Upon this understanding, and during the same month, Du Bois drew upon the firm five drafts, amounting in the aggregate to $9395, which were accepted, and, with the exception of the fifth one, were paid. The fifth one, which was for two thousand dollars, was protested for non-payment. To each of the drafts were attached a bill of lading and an invoice of the shipment. The bill of lading purported to have been issued by the Chicago and Alton Railroad Company, stating that it had received hides, giving the number and estimated weight, to be transported on the road from Kansas City to Milwaukee, and marked and consigned as follows: "To shipper's order. Notify Goetz and Luening, Milwaukee, Wis." The invoice purported to give the net weight in pounds of the hides shipped, and the market price

Digitized by Google

at Milwaukee, and their estimated aggregate value, referring to the sight draft for two thirds of the amount.

The drafts were made payable to Thornton, the cashier of the Bank of Kansas City, and were cashed as drawn, the bank paying their full face, less the usual rate of exchange on Milwaukee. The amount, as each was cashed, was passed to the credit of Du Bois, and was checked out by him in the usual course of business, within a few days.

The drafts were sent by the bank to its correspondent at Chicago indorsed "for collection" on its account, and by him were forwarded to Milwaukee. The invoices of some of the shipments were indorsed in the same way. The bills of lading were indorsed by Du Bois, per J. MacLellon, his clerk.

The signatures to the bills of lading proved to be forgeries, on which account Goetz and Luening refused to pay the fifth draft. The bank thereupon brought an action against them for the amount in the Circuit Court of the United States. They defended, and set up as a counter claim the sums they had paid on the four drafts. At the same time, they commenced an action in the State court against the bank to recover the money paid on those four drafts. The latter action was removed, on application of the bank, to the Circuit Court of the United States, where the two actions were consolidated and tried as one, the same questions being involved in both. The trial resulted, by direction of the court, in a verdict for the bank, by which it recovered against the firm the amount claimed on the unpaid draft, and defeated the claim of the firm for the return of the money paid on the other four drafts.

The contention of Goetz and Luening was substantially this, that they accepted the drafts in the belief that the bills of lading were genuine; that their genuineness was asserted by the indorsement of the bank on the invoices accompanying them; that the bills of lading were forgeries; that no shipments as stated therein had been made; and that Du Bois bore in the community such a reputation for dishonesty, having been charged at other times with forging bills of lading attached to drafts drawn by him, that the bank was guilty

Digitized by Google

of culpable negligence, amounting to bad faith, in discounting these drafts on the faith of the bills of lading presented by him without inquiring as to their genuineness.

The testimony offered by the firm respecting the character of Du Bois was of great length, but it would serve no useful purpose to discuss it. It is sufficient to say that it consisted of a mass of loose statements, general charges of criminality, with vague references in some instances to reported particulars, sensational articles in newspapers, surmises, insinuations, rumors, beliefs, and suspicions, which might make men cautious in their dealings with him; but they were altogether of too indefinite and uncertain a character to interdict all transactions with him in the ordinary course of business.

Besides, testimony was produced by the bank highly favorable to the standing and character of Du Bois. He is shown to have been a man of great enterprise and capacity; and just before opening business with the bank, to have been a member of the government of Kansas City, representing his ward in the common council, and spoken of as a prominent candidate for its mayoralty. He was a member and director of the board of trade of the city, and one of its committee on arbitration, to which business disputes of its members were referred for settlement. He had been a captain in the Union army, and bore the reputation of a brave and gallant officer. He was received in the best society of the city, and was generally popular. He commenced business with the bank in March, 1881, and drafts by him, cashed by the bank, amounted from twenty to one hundred thousand dollars a month. Those drafts were always accompanied by bills of lading, and not until after the discovery of the forgery of the bills of lading in this case was it known that in any of these transactions he had been guilty of dishonest conduct.

Under these circumstances, it is not suprising that, when the drafts on the merchants in Milwaukee were presented for discount, the bank made no inquiry as to the genuineness of the bills of lading attached to them. A bank in discounting commercial paper does not guarantee the genuineness of a document attached to it as collateral security. Bills of lading

Digitized by Google

attached to drafts drawn, as in the present case, are merely security for the payment of the drafts. The indorsement by the bank on the invoices accompanying some of the bills, "for collection," created no responsibility on the part of the bank; it implied no guarantee that the bills of lading were genuine; it imported nothing more than that the goods, which the bills of lading stated had been shipped, were to be held for the payment of the drafts, if the drafts were not paid by the drawees, and that the bank transferred them only for that purpose. If the drafts should be paid, the drawees were to take the goods. To hold such indorsement to be a warranty would create great embarrassment in the use of bills of lading as collateral to commercial paper against which they are drawn.

The bank after discounting the drafts, stood towards the acceptors in the position of an original lender, and could not be affected in its claim by the want of a consideration from the drawer for the acceptance, or by the failure of such consideration. This has been held in numerous cases, and was directly adjudged by this court in *Hoffman* v. *Bank of Milwaukee*, 12 Wall. 181, which in essential particulars is similar to the one at bar. There the bank had discounted drafts drawn by parties at Milwaukee on Hoffman & Company, commission merchants of Philadelphia, to which were attached bills of lading purporting to represent shipments of flour. Hoffman & Company accepted and paid the drafts. The bills of lading proved to be forgeries, and Hoffman & Company sued the bank to recover the money paid. It was contended that they had accepted and paid the drafts in the belief that the accompanying bills of lading were genuine, and that, had they known the real facts, they would not have accepted and paid the drafts, and could not have been compelled to do so, in which case the loss would have fallen on the bank; that is, that they paid the drafts under a mistake of facts. But the court answered "that money paid as in this case by the acceptor of a bill of exchange to the payee of the same, or to a subsequent indorser in discharge of his legal obligation as such, is not a payment by mistake, nor without consideration, unless it be shown that the instrument was fraudulent in its

Digitized by Google

inception, or that the consideration was illegal, or that the facts and circumstances which impeach the transaction as between the acceptor and the drawer were known to the payee or subsequent indorsee at the time he became the holder of the instrument;" that, supposing the plaintiffs accepted the bills of exchange upon the faith and security of the bills of lading attached, that fact would not benefit them, as the bills of exchange were in the usual form, and contained no reference whatever to the bills of lading, and it was not pretended that the defendants had any knowledge or intimation that the bills of lading were not genuine, or that they had made any representation upon the subject to induce the plaintiffs to contract any such liability; that undoubtedly the bills of lading gave some credit to the bills of exchange beyond what was created by the pecuniary standing of the parties to them, but that they were not a part of those instruments, and could not be regarded in any more favorable light than as collateral security accompanying the bills of exchange; and that proof that the bills of lading were forgeries could not operate to discharge the liability of the plaintiffs, as acceptors, to pay the amounts to the payees or their indorsees, as the payees were innocent holders, having paid value for the same in the usual course of business.

The case of *Robinson* v. *Reynolds*, decided by the Queen's Bench, and, on error, in the Exchequer Chamber, 2 Q. B. 196, is also similar, in essential particulars, to the one at bar. An action of assumpsit having been brought by the indorsee of a bill of exchange against the acceptors, they pleaded that the drawer was in the habit of delivering goods in Ireland to the City of Dublin Steam Company to be carried to Liverpool, consigned and deliverable there to his order, and of taking from the company a receipt for the goods, bill of lading, or document, which, by the custom of merchants, when indorsed for value, passed the property in the goods, and entitled the indorsee to have them delivered to him; that the drawer used to obtain advances from the National Bank of Ireland on indorsing to it such document, and drawing and delivering to it a bill of exchange on the defendants or other person to whom

Digitized by Google

the goods were deliverable; that the bank used to forward the indorsed document to Liverpool, and to have it presented to defendants, (or such other person,) and on the faith thereof, the defendants (or such other person) used to accept the bill of exchange; that the drawer, pretending to act in pursuance of such usage, fraudulently indorsed and delivered to the bank a document in the usual form, to which the signature of the agent of the steam company was forged, purporting that the goods mentioned in it had been delivered to the steam company, which was false; and the drawer, at the same time, indorsed the bill of exchange in controversy to the bank, which advanced him the amount on the faith of the document; that the bank indorsed the document and had it presented to the defendants with the bill of exchange, and requested them to accept the bill of exchange on the faith of, and in consideration of, the delivery of the document, which was delivered as a true one; that the defendants, in consideration of the goods mentioned in the document, and in consideration and on the faith of it, and in ignorance of its being forged, accepted the bill of exchange for and at the request of the bank; and that thus the consideration for the acceptance which defendants had been induced to make under the mistake into which they had been led by the conduct and indorsement of the bank, wholly failed. The plea did not allege that the bank knew the document to be forged or represented it to be genuine; and on that ground, after verdict for the defendants, the plaintiffs, representing the bank, obtained a rule *nisi* for a new trial, or for judgment *non obstante veredicto.* After argument the Queen's Bench made the rule absolute. In giving its decision Lord Denman said: "This plea does not show that the plaintiffs made any representation which they knew to be false, nor that they warranted the bill of lading to be genuine: nor does it disclose that the defendants accepted the bill of exchange on which the action is brought upon the faith of any assertion by the plaintiffs, further than their indorsement upon it, that the bill of lading, which turned out to be forged, was genuine. On the contrary, it appears by the other averments in the plea that the drawer of the bill was the correspondent of the

Digitized by Google

defendants, and that it was upon his authentication of the bill of lading, as referring to goods which he professed to have consigned to them, that they acted." Judgment was accordingly ordered for the defendant, *non obstante veredicto.*

The case having been taken to the Exchequer Chamber, the judgment of the Court of Queen's Bench was affirmed. Tindal, C. J., in delivering the opinion of the court, said: "The sole ground on which the defendant relies is, that the acceptance was not binding on account of the total failure or insufficiency of the consideration for which it was given, the document, on the delivery of which the acceptance was given, having been forged, and there never having been any other consideration whatsoever for the acceptance of the defendants. And this would have been a good answer to the action, if the bank had been the drawers of the bill. But the bank are indorsees, and indorsees for value; and the failure or want of consideration between them and the acceptors constitutes no defence; nor would the want of consideration *between the drawer and acceptors* (which must be considered as included in the general averment that there was no consideration), unless they took the bill with notice of the want of consideration, which is not averred in this plea. Admitting that the bill was accepted by the drawee at the request of the bank, and on a consideration which turns out to be utterly worthless, the case is the same as if the bill had been accepted without any value at all being given by the bank to the defendants; and, on that supposition, the defendants would still be liable as acceptors to the bank, who are indorsees for value, unless not only such want of consideration existed between the drawer and acceptors, but unless the indorsees had notice or knowledge thereof. For the acceptance binds the defendants conclusively, as between them and every *bona fide* indorsee for value. And it matters not whether the bill was accepted before or after such an indorsement."

Many other cases to the same purport might be cited. *Craig* v. *Sibbett*, 15 Penn. St. 238, 240; *Munroe* v. *Bordier*, 8 C. B. 862; *Thiedeman* v. *Goldschmidt*, 1 De Gex. F. & J. 4; *Hunter* v. *Wilson*, 19 L. J. N. S. Exch. 8; *Leather* v. *Simpson*, 11 L. R. Eq. 398.

Digitized by Google

The bad faith in the taker of negotiable paper which will defeat a recovery by him must be something more than a failure to inquire into the consideration upon which it is made or accepted, because of rumors or general reputation as to the bad character of the maker or drawer.

The main position of the plaintiffs in error is, therefore, untenable. It only remains to say a few words respecting the exceptions to the rejection and admission of testimony.

1. Articles from newspapers touching the conduct of Du Bois in drawing drafts, with alleged fictitious bills of lading attached, on a house in Buffalo two years before, were excluded as having no connection with the transactions in controversy, and it not appearing that the officers of the bank ever saw them; and we think the exclusion was correct. The story of his conduct two years before in a different transaction, however bad or even criminal it may have been, did not show, or tend to show, bad faith in the officers of the bank in discounting the drafts in this case.

2. The testimony of one of the plaintiffs and of one of his attorneys was offered as to declarations of the president of the bank, made several days after the last draft had been discounted, to the effect that the bank had become largely involved in certain wool transactions with Du Bois as early as July or August, 1881, and would have broken off its relations with him if it had not been that this wool matter remained unsettled. The testimony was excluded, and rightly so. The declarations had no bearing upon the good faith of the officers of the bank in the transactions in this case; and, if they had, being made some days after those transactions, they were not admissible as part of the *res gestæ* any more than if made by a stranger. Evidence of declarations of an agent as to past transactions of his principal are inadmissible, as mere hearsay. *Luby* v. *Hudson River Railroad*, 17 N. Y. 131, 133; *Adams* v. *Hannibal and St. Joseph Railroad*, 74 Missouri, 553.

3. The testimony of the president of the bank, explanatory of the conduct of its officers when certain drafts came back protested, was admissible. The witness had testified, upon examination by the plaintiffs, that the bank never had any

Digitized by Google

knowledge of a forged bill of lading by Du Bois until October 31, 1881; and that it was not a fact that he had purposely remained ignorant of the facts and circumstances attending the protests of certain other drafts of Du Bois, to which bills of lading were attached, which the bank had discounted. and that he could only explain why no particular pains were taken in the matter by stating what the usage of the bank was in such matters. As the witness was about to state such usage, the counsel of the plaintiffs interrupted him, and called his attention to the question put, whether any special pains had been taken, but the court said, let him state the usage as to such papers. The witness then answered as follows: "No, sir; I did not take any special pains, for the reason that it is a matter of very common occurrence. A merchant will ship a lot of grain to New York, the drafts come there, and for some reason a commission merchant won't pay them; it may be that he is not in a position to do it; it may be he thinks they are drawn for too much, and he refuses to pay; the drafts come back, or are held under directions of the bank for settlement or other arrangement. That is a very common occurrence on shipments with bills of lading attached." There could be no just objection to the court's receiving this explanation.

We see nothing in the other exceptions which requires notice.

Judgment affirmed.

NORTHERN PACIFIC RAILROAD v. PAINE.

ERROR TO THE CIRCUIT COURT OF THE UNITED STATES FOR THE DISTRICT OF MINNESOTA.

Argued December 13, 1886. — Decided January 10, 1887.

In the courts of the United States, as legal defences only can be interposed to legal actions, a defendant who has equitable grounds for relief against a plaintiff must seek to enforce them by a separate suit in equity; and this rule prevails in States where the law and practice per-

Digitized by Google

mits the defendant in an action at law to set up a legal as well as an equitable defence.

When, under the law and practice in a State, a denial in one clause in an answer in a suit begun in a court of the State and removed to a Federal court is held to be qualified by an admission in another, and to excuse the plaintiff from the necessity of proof of it, the same rule prevails in the Federal court.

A mere equitable claim, which a court of equity may enforce, will not sustain an action at law for the recovery of land or of anything severed from it.

The instruction requested by plaintiff was properly refused as it assumed a knowledge by plaintiff which was not proved.

The case is stated in the opinion of the court.

Mr. W. P. Clough for plaintiff in error.

Mr. Eugene M. Wilson for defendant in error. *Mr. M. F. Morris* also filed a brief for same.

Mr. Justice Field delivered the opinion of the court.

This case was brought by Paine, the plaintiff below, against the Northern Pacific Railroad Company for taking and converting to its own use 6180 pine saw-logs, alleged to be his property, and of the value of $10,442.

The defences set up are legal and equitable, a proceeding permissible by the laws of Minnesota, in which State the action was brought. The legal defences were two: first, a denial of the ownership of the logs by the plaintiff, and of the conversion of them by the defendant, and of their value beyond $7832; second, that the logs were cut by the Knife Falls Lumber Company, a corporation of the State, with the knowledge and consent of the plaintiff, and were by that company sold and delivered to the defendant prior to the commencement of this action.

The equitable defence was substantially this: that in 1880 the defendant was the owner of the lands from which the logs in controversy were cut, and that its land commissioner, under whose charge the sales of its lands were conducted, and his clerk, conspired with the plaintiff to defraud the company by procuring a sale of the lands to be made, nominally to him,

Digitized by Google

but really for the benefit of the three, at a price representing only a small fraction of the actual value of the property; that, in execution of this fraudulent purpose, the land commissioner made out a contract of sale, in the form commonly used by the company, promising for the price named to convey the lands to the plaintiff; and that the company, upon receiving in its preferred stock at par the amount of the consideration mentioned, and being ignorant of the facts and of the character and value of the lands, and relying upon its commissioner to protect its interests, executed a conveyance of the lands in the usual form to the plaintiff, and placed it in the hands of the commissioner for delivery to him; that the lands thus sold were pine timber lands, and the company was ignorant of their character and value until April, 1881, when it repudiated and disaffirmed the sale, and filed a bill in the Circuit Court of the United States for the District of Minnesota for its annulment, and the reconveyance to it of the lands, offering at the same time to return to the plaintiff the cost of the preferred stock received, which bill is now pending and undetermined.

The relief prayed in the answer was: first, that the plaintiff take nothing by his action; second, that the alleged purchase of the lands in the name of Paine be adjudged void as against the defendant; third, that an account be taken of the cost of the shares of preferred stock received in payment for the lands, and that on the repayment by the company of such cost, the plaintiff be decreed to release and reconvey the lands to the company.

The plaintiff filed a replication, denying the allegations of fraud and fraudulent combination stated in the equitable defence, and any license or assent by him to the lumber company to cut the logs.

The case was then removed, on application of the defendant, from the state court to the Circuit Court of the United States. In that court the equitable defence could not be made available. In the courts of the United States, to legal actions legal defences only can be interposed. If the defendant have equitable grounds for relief against the plaintiff, he must seek to

Digitized by Google

enforce them by a separate suit in equity. If his equitable grounds are deemed sufficient, he may thus stay the further prosecution of the action at law, or be furnished with matter which may be set up as a legal defence to it. Upon the removal, therefore, of the action to the Circuit Court, the equitable defence could not be considered. It would have been entirely proper for the defendant to have amended his answer by striking out that portion embracing this defence. But he did not take that course, and the plaintiff relied upon its allegations as evidence. If the pleadings are construed as in the state court, there was an admission by them of an important fact in the case; namely, of title by a deed from the former owner of the lands. In the state courts, where an answer sets up several distinct defences, a denial in one is held to be qualified by an admission in another. Thus, in *Derby & Day* v. *Gallop*, 5 Minn. 119, where the action was replevin for unlawfully taking the plaintiff's goods, and the answer contained two defences: 1st, a general denial of the allegations of the complaint; and, 2d, a justification of the taking under a levy upon execution; it was held that the answer admitted the taking, for the purposes of the trial, and to that extent the second defence affected the first. In *Scott* v. *King*, 7 Minn. 494, the same doctrine was declared, the court holding that a general denial in one defence, inconsistent with special matter alleged in a second defence, is to be considered as modified thereby. See also *Zimmerman* v. *Lamb*, 7 Minn. 421. The admission of the execution of a deed by the former owner, and thus of title in the plaintiff, if it could be used, obviated the want of other proof on that point. In order that the plaintiff might recover, it devolved on him to prove not merely the value of the logs taken, but that he owned them, or was entitled to their possession. It is not contended that he acquired any title to them except as annexed to the lands from which they were cut. Standing timber is a part of the realty and goes with its title or right of possession. When severed from the soil its character as realty is changed; it has become personalty, but the title to it continues as before.

The right, therefore, to recover for what is severed from the

Digitized by Google

freehold depends upon the right to the freehold itself. If the plaintiff is in possession, he is presumed to be lawfully so, having the right of possession, and, therefore, entitled to what is severed. If he is out of possession, he must show a title to the land, or right to its possession. A mere equitable claim, which a court of equity may enforce, will not sustain an action at law for the recovery of the land or anything severed from it. *Halleck* v. *Mixer*, 16 Cal. 574; *Mather* v. *Trinity Church*, 3 S. & R. 509; *Harlan* v. *Harlan*, 15 Penn. St. 507; *S. C.* 53 Am. Dec. 612.

In the case at bar, no proof was offered by the plaintiff of his title to the land, from which the logs in controversy were cut, or of his ownership in any other way, he relying upon the admission to that effect contained in the paragraph of the answer setting up the equitable defence. This defence was not, as already stated, available in the action at law after the removal of the case to the Circuit Court of the United States, and the answer might have been there amended by striking it out; but so long as it remained a part of the pleadings, the fact admitted by it in the state court must be considered as still admitted in the Federal court. No hardship can follow from this rule, for the defendant, by amending his answer after the removal of the cause, can always avoid this result; in many cases it will obviate the inconvenience of making proof of a fact within the knowledge of the parties.

The objection, that there was no evidence of a delivery of the deed, which the answer alleges was executed and placed in the hands of the land commissioner of the railroad company for that purpose, is not well taken. It will be presumed, after the lapse of months, as in the present case, that the delivery was made as directed; if not, it was for the defendant to show it — the proof, if the fact were so, being in its power. The prayer of the special defence is for a cancellation of the contract of sale, and a *reconveyance* of the land to the defendants.

It only remains to consider the refusal of the court to give the instruction requested with reference to the parol license from the railroad company, at the time the owner of the

Digitized by Google

lands, to the lumber company to cut the logs in question, and the alleged knowledge of the plaintiff that it was acting upon the license. The license was proved, but the court held that there was no evidence of the plaintiff's knowledge of it. The instruction requested was as follows:

"If the jury believe that the Northern Pacific Railroad Company gave a license to the Knife Falls Lumber Company to cut logs upon the lands described in the complaint, while the said railroad company was the owner of the said lands, and that the said lumber company cut the logs described in the complaint, acting under such license, and that the plaintiff knew of the existence of such license, and knew that the said lumber company was cutting such logs, acting under the said license, and made no objection to such cutting; in such case, the jury would be at liberty to find that the said cutting was by the license and permission of the plaintiff, and if the jury does so find, it should find a verdict for the defendant."

The instruction was properly refused for the want of evidence of the plaintiff's knowledge of the license. And by the conveyance of the lands to the plaintiff the license from the original owner was necessarily terminated.

Judgment affirmed.

CHICAGO AND NORTHWESTERN RAILWAY *v.* McLAUGHLIN.

ERROR TO THE CIRCUIT COURT OF THE UNITED STATES FOR THE NORTHERN DISTRICT OF IOWA.

Argued November 29, 30, 1886.—Decided December 20, 1886.

Defendant in error was in the employ of plaintiff in error as a car repairer. While mounted at a side track upon a ladder which rested against a car that he was repairing by order of his immediate superior, he was thrown from the ladder by reason of the car being struck by a switching engine and car, and was seriously injured. He brought a suit against the Railway Company under § 1307, Code of Iowa of 1873. The Railway Company defended upon the grounds: (1) that there was no negligence on the part of its employés which entailed responsibility on the company; (2) that there was contributory negligence on the part of the plaintiff

Digitized by Google

below. The case was tried before a jury, and resulted in a verdict of $15,000 for plaintiff below, and judgment was entered on the verdict. This court, on the case made by the record in error, affirms that judgment by a divided court.

It was enacted in § 1307 of the Code of Iowa of 1873 that:

"Every corporation operating a railway shall be liable for all damages sustained by any person, including employés of such corporation, in consequence of the neglect of agents, or by any mismanagement of the engineers or other employés of the corporation, and in consequence of the wilful wrongs, whether of commission or omission of such agents, engineers, or other employés, when such wrongs are in any manner connected with the use and operation of any railway on or about which they shall be employed, and no contract which restricts such liability shall be legal or binding."

In March, 1878, the testator of the defendant in error commenced this suit against plaintiff in error in the Circuit Court of Clinton County, Iowa. The petition set forth as follows:

"The plaintiff complains of the defendant, The Chicago and Northwestern Railroad Company, a corporation organized and existing under the laws of the State of Illinois, and doing business in the State of Iowa, being engaged in operating a railroad in said last named State, moving by steam power cars containing passengers and goods over the said railroad; that the plaintiff, on the 18th of October, 1877, in the city of Clinton, State of Iowa, was in the employment of defendant as a car repairer of defendant's said cars, and whilst at said date and in said city plaintiff was engaged in the performance of his duty repairing one of defendant's cars which was standing on one of defendant's side tracks, the plaintiff standing at a height of about nine feet from the ground on a ladder which was inclined against said car, the plaintiff was then and there, through the carelessness, negligence, and default of said defendant and its servants thrown violently to the ground, breaking the right leg of plaintiff and inflicting upon him other great and permanent injuries, to the damage of plaintiff in the sum of fifteen thousand dollars. The plaintiff therefore demands judgment against the said defendant for the sum of fifteen thousand dollars, with interest and costs."

Digitized by Google

On the petition of defendant the action was removed into the Circuit Court of the United States; and in that court the plaintiff filed the following amendment to his petition:

"Now comes plaintiff and, by leave of court first had, amends his original petition and amendment thereto, heretofore filed herein as follows, viz.:

"1. He states that while properly and not negligently performing the service stated in said original petition, his position became suddenly dangerous by reason of the shifting of certain switches and running an engine and car upon the track where he was working.

"That the switchman performing said service of shifting said switches saw plaintiff in his position, which became dangerous by said acts, and although plaintiff was thereby placed in imminent peril thereby, and said switchman could easily have prevented a collision and injury to plaintiff by the exercise of ordinary care and caution, in either apprising plaintiff of the sudden approach of said engine or by turning the brake upon said car, or causing the engineer in charge of said engine to stop the same, he failed so to do, but carelessly, negligently, and heedlessly allowed said collision and injury to take place to plaintiff's great injury.

"2. That the fireman upon said engine saw plaintiff in said exposed position, and, after the danger and peril of plaintiff's life and limbs were well known to him, he allowed said collision to take place, although he could, by the exercise of ordinary care, have prevented it by notifying the engineer that plaintiff was in danger, but that he carelessly, negligently, and with a total disregard for plaintiff's safety, neglected and failed to impart said notice, and plaintiff was injured thereby.

"3. That the engineer in charge of said engine thrown in and upon said track as aforesaid, by reason of plaintiff's perilous position, was ordered to stop his said engine, and that he could easily have obeyed said instruction, but disregarding said order to stop and carelessly and heedlessly refusing to inquire into the cause of such order, but with a negligent and total disregard of consequences, hurried said engine on to a collision, as stated in plaintiff's original petition.

Digitized by Google

"4. That the facts rendering plaintiff's position perilous by reason of the movements of said switches and car and engine were to plaintiff entirely unknown, although due care and caution was exercised by him.

"Wherefore plaintiff prays judgment as heretofore."

To this amended petition defendant made the following answer:

"For answer to plaintiff's petition herein as amended defendant states—'I. It denies each and every allegation in said petition and amendment contained. II. The plaintiff was guilty of negligence, which contributed to the injury complained of in this: He failed to notice or listen for the approach of engines or other cars, and failed to get down from the ladder whereon he stood when the engine and car which caused the injury approached the line of cars whereon plaintiff was at work, in plain sight of plaintiff, with the bell ringing to warn all persons of their coming.'"

The cause was tried before a jury with verdict for plaintiff in the sum of $15,000, and judgment was entered on the verdict. Defendant sued out this writ of error. The defendant in error died after the cause was docketed here, and his executor appeared and defended the suit.

The exceptions brought up all the evidence. It was in some respects conflicting. Counsel for plaintiff in error filed with their brief a statement of the facts which they regarded as established. Counsel for defendants in error referring to this statement, filed with their brief a statement of "omitted and material facts in the interest of defendant in error." From the two statements the following facts appear to be substantially agreed to by both parties:

Clinton, Iowa, is a division station on the railway of plaintiff in error. All freight trains coming from east or west are here stopped and retrained. The tracks of the main line and sidings run east and west.

Near the west end of the yard, and about nine feet north of the main line, is a track some fifteen hundred feet long, known as "number two track," used exclusively for way-cars. Just north of this way-car track is another side track, known

Digitized by Google

as "track number three." There is a cut-off track from the main line, by which tracks numbers two and three are reached through switches.

Whenever a freight train comes into Clinton from the east or west, the way-car is taken off by a switch engine, and put on this track number two, and when any freight train is to go out either east or west, a switch engine goes on to track number two to get a way-car for such out-going train. All way-cars going or coming from the west are used "first in first out," while those going and coming from the east had "regular run" way-cars. A switch engine went on to number two track about twenty times during each day time, to put away or to get a way-car. Two switch engines were used in the yard in the day time, and three during the night time. There were from twenty to thirty trains each way per day, and the switch engines in the yard kept up a clatter and constant ringing of bells.

O'Neil was a coach-builder, or car carpenter, and worked for the railway company in its shops at Clinton from 1865 to 1877, except about four years, during which latter time he was away working mostly for the officers of the company. The shop where he worked was situated about eight rods from the main line, at the east end of the yard, where the volume and character of the traffic could be seen by him. In the performance of his duty he was required to work on or about the trains. For about a year before his injury he had been accustomed to go upon the way-car track number two, on an average of once a week to do repairs, such as putting in lights of glass broken out of way-car windows, fixing door locks, putting on and repairing lamp-brackets, and the like. At the time of the injury he was acting under the direct order and instruction of his immediate superior.

About 10 o'clock in the morning of a clear, pleasant day in October, 1877, O'Neil, by direction of the foreman, went to track number two, to do some repairs on way-cars, and among other things, to take off some old lamp-brackets and put on new ones. After doing some work, O'Neil put his ladder up on the south side of a way-car on number two track. There

Digitized by Google

were seven or eight way-cars on this track — two east of the one on which he was working, and the rest west of it. There was a space of a few feet between those to the west and the other three.

These way-cars were ten to twelve feet high, and the ladder about the same length. Way-cars project out over the track about two feet, and allowing for the proper slant, the foot of O'Neil's ladder rested near the ends of the ties on the north side of the main line.

The distance from the ladder where O'Neil was, to the switch on the cut-off east, was about one hundred and seventy-five feet, and to the switch where the cut-off joins the main line, about two hundred and fifty feet. There were two cars just east of the one on which O'Neil's ladder rested. All three were close together; but whether coupled or not is unknown. These switches from the main line to the cut-off and to number two track were somewhat worn, and made considerable noise when an engine passed over them.

O'Neil went up the ladder with a brace screw-driver, a hammer, and a new lamp-bracket. He was not furnished with a second man as lookout; but he could have heard the ringing of the engine bell if he had been listening. He put the new lamp-bracket on top of the car, and stepped down a step or two to take off the old bracket. This was done by taking out two screws with his brace screw-driver, and breaking off two screws with a hammer. Just before the accident, he was breaking off screws which held the lamp-bracket, with a hammer, with his face within four or five inches of the car. Just as this work was finished, which occupied about two minutes according to the best judgment of O'Neil, the car on which his ladder rested received a shock which threw him violently from his ladder, and he struck on the tie, or the iron rail of the main line, breaking his femur in two places, and inflicting very severe and permanent injuries which totally disabled him, and shortened his life. At the time of the injury he was facing westwardly, while the engine which caused the injury came from the east. Before he exposed himself, in the performance of his duty, he found, from examination of

Digitized by Google

the switches, that four switches must be turned, east of him, before a car could enter the track upon which he was working, and the employés so turning such switches could plainly see him on the ladder. He could not see the nearest switch, the turning of which threw the car and engine on to the track, causing the injury, because the lever was on the north side and obscured by standing cars.

The accident happened in this way: Switch-engineer Schumaker and Fireman Riggs came off a side track south of the main line, with the engine headed west, and with a way-car ahead of the engine. Switchmen Wilde and Ellenwood accompanied them on foot; Wilde on the south side of the track and Ellenwood on the north side of it. The bell of the engine was ringing. Just what side track they came from none of them remember, but it was some side track which came on to the main line east of the switch which leads from the main line to the cut-off, and to number two way-car track. The object of the switchmen was to go in on way-car track number two, to get a way-car for the use of some out-going train. The situation was such that the engineer, when on the main line east of the cut-off switch could have seen O'Neil on the ladder if he had looked; but he was watching his switches ahead of him, and did not see O'Neil at all. After his engine passed off the main line on to the cut-off, and thence on to track number two, the engineer could not have seen O'Neil if he had looked, because he was on the north side of his engine, and the way-car attached to the front of his engine wholly obstructed his view. Wilde saw O'Neil on the ladder at a distance from the point where the striking cars caused the injury; "thought he would get down; didn't pay much attention to it." Ellenwood could not see O'Neil on the ladder at all.

The fireman, Riggs, on the south side, a part of whose duty it was to look out for danger, saw O'Neil for a distance of from one hundred and twenty to one hundred and fifty feet before reaching the point of injury, and watched him, knowing that if he did not get down from the ladder he would be injured, and knowing, or believing, that he was working. He did not speak to the engineer of the fact, but, shortly before the collision

Digitized by Google

he shouted "Whoa!" in an unusually sharp tone which was the word he always used when he wanted the engine to stop quickly. Schumaker at once obeyed Riggs' signal which he knew meant "stop," by putting his lever in the back motion. He did not know why he was ordered to stop, but did know that it had no reference to the contemplated coupling, for he was looking out for that himself. He did not inquire why he was ordered to stop. He had already shut off steam from his engine. At this time the engine was moving four or five miles per hour, and the reversal of the lever would have stopped the engine and car before the car struck the standing cars, on one of which O'Neil was. But when the cars were six to ten feet apart, and the engine had practically come to a full stop, Switchman Ellenwood, who was on the north side of the way-car track, ready to couple the way-car attached to the engine, to the standing way-cars, seeing the cars were not going to come together so that he could make the coupling, gave a signal and called out to Schumaker to come ahead a little. Thereupon Schumaker at once put the lever in the forward motion, and instantly put it in the back motion again, because an instant of forward steam he knew was enough to send the cars together, which proved correct. The coupling was made, and the accident to O'Neil happened.

The instant Riggs heard Ellenwood give the signal to come ahead a little, he told Schumaker that there was a man on the side of the car, but the same instant Schumaker had put his lever forward and back again, the cars had struck and the injury was complete.

When the engine and car came off the main line, they were moving four to five miles per hour. They slacked up for the switch at track number two, and started up again to four or five miles per hour at the time Riggs gave the signal "Whoa." The engine and car were in plain sight of O'Neil from the time they came off the side track on the main line, until they struck the standing cars on one of which he was at work; and he admits that if he had been listening he could have heard the click of the engine coming over the switches, and could have seen the engine while on his ladder by turning his head

Digitized by Google

to the east, and could also have heard the ringing of the bell, but he did not look nor listen while on the ladder at work.

The time which elapsed from the time the engine and way-car left the main line until the accident happened was probably twelve to fifteen seconds, and from the time Riggs gave the signal "Whoa," to the time of the accident, was probably from three to five seconds.

After the evidence was in defendant asked the court to instruct the jury as follows:

"1. Conceding to all the testimony its greatest probative force, it is not sufficient to warrant the jury in finding the defendant or any of its servants guilty of any negligence whereby the plaintiff received his injuries.

"2. The undisputed and uncontradicted evidence shows that the plaintiff was guilty of negligence which directly contributed to his injury. You are therefore instructed to find for the defendant."

These requests were refused. Defendant excepted, and made the refusal one of the assignments of error in this court.

Defendant also excepted to many passages in the charge to the jury. In this court the giving of the following instructions was assigned as error:

"4. Under the statute of the State of Iowa, every corporation operating a railway is liable for all injuries caused to, and the consequent damages sustained by, the employés of such corporation in consequence of the neglect of a co-employé in the performance of his duty to the company; that is to say, the negligence of an employé in the discharge of the duties of his position in the employ of the company is deemed to be the negligence of the corporation, and will render the company liable for any injuries caused thereby to any of its other employés, unless the person injured is himself guilty also of negligence contributing to the accident."

"14. It is claimed on part of the plaintiff that the switchman on the south side saw O'Neil's danger in time sufficient to have averted the danger. On part of defendant it is claimed that this switchman did not see O'Neil in time, and under such circumstances as that it was his duty to either have

Digitized by Google

stopped the engine or warned the plaintiff of the danger. Has the plaintiff by a fair preponderance of evidence, satisfied you that this switchman had knowledge of plaintiff's danger in time sufficient to have averted the accident either by stopping the engine or through a warning to the engineer, or by notifying plaintiff of the coming danger, so that he could have avoided the accident? It is not sufficient for it now to appear that possibly the switchman might have done so if he had known all the facts that are now made apparent. The true inquiry is, was this switchman, acting under the light and knowledge he then had, wanting in the exercise of ordinary care in not stopping the engine, or in not notifying plaintiff of his danger? Did he or not have knowledge of the danger to which plaintiff was exposed in time sufficient to enable him by the use of ordinary care to have caused the engine to be stopped, or to warn the plaintiff, so that he might have gotten down from the ladder before the cars came in contact?"

"15. It is further claimed on behalf of plaintiff that the fireman, Riggs, was negligent in not notifying the engineer of the peril to which plaintiff was exposed. There is evidence tending to show that Riggs saw the plaintiff upon the ladder and knew of his position, and that there was danger of an injury being caused to him if he did not get down before the cars came in contact; that Riggs gave a signal to the engineer to stop in time to prevent the cars coming into contact, which signal the engineer obeyed by shutting off the steam and reversing the engine. On part of plaintiff it is claimed that Riggs should have notified the engineer of the necessity for stopping the engine, namely, that there was a man in a dangerous position; and it is claimed that Riggs had time sufficient to have so done, so that the engineer could have prevented the cars coming in contact. On the part of defendant it is claimed that Riggs did all that could reasonably be expected of him; that he gave the proper signal to stop the engine, and that in obedience thereto the engineer reversed his engine and brought it nearly to a stop, and then, before Riggs had time to ascertain the necessity for any further action on his part, the engineer, in obedience to a signal from the switchman,

Digitized by Google

which could not have been reasonably foreseen by Riggs, gave a forward motion to the engine, and that it was beyond the power of Riggs to again notify the engineer to stop in time to prevent the accident."

"16. It was the duty of Riggs, if he saw the plaintiff was in a dangerous position, and that there was risk of an accident if the cars were brought into contact before plaintiff should get down from the ladder, to take such action as was reasonably within his power to stop the engine and prevent the cars from coming into contact. When human life or limbs are in peril, ordinary prudence requires that all reasonable means should be used by those who are aware of the danger, to avert the same and avoid injury to the person exposed thereto. Riggs himself testifies that he saw plaintiff upon the ladder, knew that he was in a dangerous position if the cars were brought into contact, and saw, as the engine approached the standing cars, that the plaintiff remained upon the ladder. Under these circumstances, was or was it not his duty to notify the engineer, who had control of the engine, of the nature of the danger to be avoided, or was his duty discharged when he gave the signal to stop by crying out 'Whoa'? Did he or did he not have sufficient time to give such information to the engineer, if you find the same should have been given? It is for you to determine what ordinary prudence, when human life and limb were in danger, required of Riggs under the facts and circumstances known to him at that time, and whether Riggs did or did not do all that ordinary prudence required of him, and all that he had a fair opportunity to do, in the exercise of ordinary care, in the brief time in which he was required to think and act?"

"17. It is further claimed on part of plaintiff that the engineer did not exercise ordinary care and prudence on his part, in that, after receiving the signal to stop from the fireman, and after, in obedience thereto, reversing his engine and bringing the same nearly to a stop, he then, in obedience to a signal from the switchman on the north side of the track gave a forward motion to the engine and brought the cars into contact, without first ascertaining the reason why the signal

Digitized by Google

to stop was given by the fireman. On part of defendant, it is claimed that the switchman and fireman have a right to signal the engineer, and that it is the duty of the latter to obey such signals, and if the switchman gave the signal without fault on his part, there would not be negligence on part of engineer in obeying the signal thus given."

"18. That the engineer is bound to obey signals given by the switchmen is doubtless true, as a general proposition, but by this can only be meant that the engineer is bound to obey if there is no good reason why he should not obey. Suppose he received a signal from a switchman to move forward when he sees that if he does he will cause an accident, would it not then be clearly his duty to disobey the signal? Suppose at the instant he receives a signal from the switchman to move forward his fireman notifies him that there is a man on the track in danger, and that he must stop. It cannot be doubted that in such cases the engineer must disobey the signal from the switchman. Take it in this case. Suppose the engineer knew that the plaintiff was on the ladder, exposed to danger, if the cars were brought into contact, and the switchman gave the signal to move forward, would it be acting with reasonable prudence to obey the signal, or would it not be clearly the duty of the engineer to disobey the same? But it is in evidence that the engineer in this case did not know in fact that the plaintiff was in danger. He had received a signal from his fireman, on the left of his engine, requiring him to stop, and he obeyed it by shutting off steam and reversing his engine. What inference did the engineer draw from the signal given him by the fireman to stop? Did he or did he not infer therefrom that there was some sufficient reason known to the fireman why the engine should be stopped? Was he not bound to so infer, and if he did, what was it his duty to do when he received the signal from the switchman on the other side of the track to move forward? Did or did not ordinary care and prudence require of him to ascertain from his fireman the reason of the order to stop given by the fireman on his left, before he obeyed the order to move forward given him by the switchman on his right? The engineer him-

Digitized by Google

self testifies that the signal 'whoa' given by the fireman was given somewhat sharply, indicating the necessity for promptly stopping the engine; and he further testifies that from the distance from the engine to the stationary cars he supposed the order to stop was given by the fireman, not because the cars were close enough for coupling, but for some other cause or reason unknown to him, and that he started the engine forward upon receiving the signal from the switchman without making any inquiry of the fireman whether he could safely do so, or without inquiring why the fireman had ordered him to stop the engine. In so doing, did or did not the engineer exercise the care which ordinary prudence demanded of him?"

"19. If, under the instructions given you, you find that none of the employés of the company were guilty of negligence causing the accident, then your verdict must be for defendant, and you need not consider any other of the questions submitted to you. If, however, you find that the defendant was negligent in any of the particulars alleged against it, and that such negligence was the immediate cause of the injury to plaintiff, you will then consider whether the defence of contributory negligence set up by the defendant has been made out and sustained by a fair preponderance of the evidence, the burden of the issue in this respect being upon the defendant; or, in other words, in order to defeat plaintiff's recovery on the ground of contributory negligence on his part, you must be fully satisfied from the evidence, that plaintiff was guilty of negligence which proximately contributed to the injury complained of."

"20. It was the duty of the plaintiff, when he was engaged in the work at which he was put by the defendant, to exercise ordinary care on his part to protect himself from danger. He knew when he undertook the repairs on the car in question that it stood upon a track where engines might possibly come, and he was bound to the exercise of all the care and watchfulness which an ordinarily prudent man would use under the same circumstances."

"21. Extraordinary care was not required of him. He was expected to do the work that he was sent to attend to, and

Digitized by Google

he could only be required to exercise the care and watchfulness that were compatible with the discharge of his duty to the company. Plaintiff testifies that he did not see or hear the engine when it was approaching, and it is claimed that his failure to notice its approach is proof of his negligence, on the theory that if he had kept his senses on the alert he would either have seen or heard the engine in time to have avoided the accident. On the part of plaintiff it is claimed that his failure to notice the approach of the engine was due to the fact that the work he was engaged in doing so occupied his attention that without fault upon his part, he failed to notice the coming of the engine, either by sight or sound. You will consider all the evidence introduced in the case tending to show what work the plaintiff was required to do, the position he occupied upon the side of the car, the direction in which his face was turned whilst at work upon the ladder, the character of the work upon which he was actually engaged, and the demands, if any, which this work made upon his attention, the distance from where the plaintiff was at work to the point where the engine came upon track No. 2, the number of cars, if any, between that upon which plaintiff was at work, and the approaching engine, and all facts shown by the evidence adduced by either party which tend to throw light upon the question — and from this evidence, you will determine whether the defence of contributory negligence, as alleged by the defendant, has been established by a fair preponderance of evidence, the burden of establishing the same being, as already stated, upon the defendant."

"22. If the evidence, under the instructions given you, fails to establish the fact that the plaintiff was wanting in the exercise of proper care and watchfulness whilst engaged in repairing the way-car of defendant, then the defence of contributory negligence is not made out, and on this issue, you should then find for plaintiff; but, on the other hand, if you find that the failure of plaintiff to notice the approach of the engine was due to a want of ordinary care and watchfulness on part of plaintiff, you will then consider and determine whether the defendant had knowledge of the dangerous posi-

Digitized by Google

tion of plaintiff and of his failure to notice the approach of the engine in time to have avoided the injury to plaintiff by the exercise of reasonable care on its part, the rule of law being that, although the plaintiff may have negligently exposed himself to an injury, yet if the defendant, after discovering the exposed situation and danger negligently incurred by the plaintiff, can, by the exercise of reasonable care on its part, prevent any injury to plaintiff, it is bound so to do, and a failure to exercise such reasonable care, after knowledge of the danger to which plaintiff may be exposed, will render the defendant liable for a resulting injury, notwithstanding the fact that plaintiff may have been in the first instance, negligent on his part. Under such circumstances, plaintiff's negligence is not deemed to be a proximate cause of the injury. If then, you find from the evidence that the plaintiff, through his failure to notice the approach of the engine in time to get down from his exposed situation on the side of the way-car, was guilty of negligence contributing to the causing of the injury complained of, then your verdict must be for the defendant, unless you further find that, after discovering the fact that plaintiff was at work upon the way-car in such a manner as to expose him to danger in case the cars were brought into contact, the defendant could, by the exercise of proper care, have prevented the accident, and that having knowledge of the danger to which plaintiff was exposed the defendant failed to exercise proper care, thereby causing the accident, in which case your verdict should be for the plaintiff. That is to say, if you find from the evidence that the switchman Wilde, and the fireman Riggs, or either of them, saw the plaintiff in his exposed position, and knew the danger to which he would be exposed if the cars were brought into contact whilst the plaintiff was on the ladder, then it was the duty of such switchman or fireman, as already explained to you, to take such reasonable means as were fairly within his power, to prevent bringing the cars into contact, after he knew that plaintiff had failed to notice the approach of the engine. If by the use of such means on part of those in charge of the engine, the accident could have been prevented, and you find that

Digitized by Google

they have failed to use such means, after having knowledge of the plaintiff's exposed position and failure to notice the approach of the engine, and that in consequence of such failure, the accident was caused, then the fact that the plaintiff failed to notice the approach of the engine, would not defeat his right of recovery."

Mr. N. M. Hubbard and *Mr. Charles A. Clark* for plaintiff in error.

Mr. William A. Foster for defendant in error.

Mr. Chief Justice Waite announced that the judgment of the court below was

Affirmed by a divided court.

MACE v. MERRILL.

ERROR TO THE SUPREME COURT OF THE STATE OF CALIFORNIA.

Submitted December 6, 1886. — Decided January 10, 1887.

As it appears that the right of the state of California to have the lands which are in dispute in this action listed is admitted, it is held that this court is without jurisdiction over the judgment of the Supreme Court of California upon the adverse claims of the parties. *Hastings* v. *Jackson*, 112 U. S. 233, affirmed.

This was an action to try the title to a tract of land listed to California under § 8 of the act of September 24, 1841. The facts which were claimed to make a Federal question are stated in the opinion of the court.

Mr. A. T. Britton, *Mr. A. B. Browne*, and *Mr. Walter H. Smith* for plaintiff in error.

Mr. Edward B. Merrill for defendant in error.

Mr. Chief Justice Waite delivered the opinion of the court.

This is a suit begun by Mace, the plaintiff in error, against Merrill, the defendant in error, in the District Court of Los

Digitized by Google

Angeles County, California, pursuant to a reference by the surveyor-general of the state, under § 3314 of the Political Code of that state, which is as follows:

"When a contest arises concerning the approval of a survey or location before the surveyor-general, or concerning a certificate of purchase or other evidence of title before the register, the officer before whom the contest is made may, when the question involved is as to the survey, or one purely of fact, or whether the land applied for is a part of the swamp or overflowed lands of the state, or whether it is included within a confirmed grant, the lines of which have been run by authority of law, proceed to hear and determine the same; but when, in the judgment of the officer, a question of law is involved, or when either party demands a trial in the courts of the state, he must make an order referring the contest to the District Court of the county in which the land is situated, and must enter such order in a record book in his office."

The record shows that the S. E. ¼, Sec. 21, T. 2 S., R. 13 W., S. B. M. was listed to the state of California by the Secretary of the Interior on the 21st of March, 1876, as part of the 500,000 acres of land selected by the state under § 8 of the act of Congress approved September 24, 1841, c. 16, 5 Stat. 455, for the purpose of internal improvements. On the 17th of November, 1874, Mace applied to the surveyor-general of the state for the purchase of this tract. His application was on file when the land was listed. Merrill, the defendant in error, also claimed the same tract from the surveyor-general. His claim was based on an alleged location of the tract under the laws of California, and a payment therefor to the state in school warrants on the 23d of June, 1857. Such being the case, he insisted that the title of the state inured to his benefit under the provisions of §§ 1 and 3 of the act of July 23, 1866, c. 219, 14 Stat. 218, "to quiet land titles in California." Mace set up no title in himself under any statute or authority of the United States. His application was to the state, and he claimed under state authority only. It is true that if the state had the right to sell he might have the right to buy, but that right to buy would come, not from the United States, but

Digitized by Google

from the state. The court below decided that the state could not sell, because it had already sold to Merrill, and that all the title it had was held in trust for him. Mace, in his petition, did, indeed, aver that he entered into the possession of the land in 1869, with the intention of acquiring title from the United States by preëmption, and that, in 1873, he filed in the proper office his declaratory statement and offered the necessary proof; but his claim in this case is not based on any such right, the prayer of his petition being only that it may be adjudged that he "has the better right to purchase." If his rights under the preëmption laws are superior to the title of Merrill under the state's selection, it may perhaps be made a subject of litigation in another suit, where his title can be set up against that of Merrill; but in this suit, which is only to establish his right to buy from the state, no such questions can arise. His right to buy has no connection whatever with his claim of preëmption; for, as he says in his petition, "he made application to the surveyor-general of the state of California under the provisions of Title eight of the Political Code of the state, to purchase, . . . which said application was in all respects made in conformity with the requirements of the code aforesaid, and which said application has been ever since the date last aforesaid, and now is, on file in the office of the surveyor-general aforesaid;" and "the plaintiff is the owner of a school land-warrant, and under which he claims the benefit of the location of said quarter section." Had this suit been instituted by Mace to establish a right superior to that of the state, growing out of his preëmption claim, and to charge the state as his trustee on that account, the case would have been different; for then he would have set up a right under the preëmption laws of the United States, and, with a decision against him, he might be in a condition to have a review by this court. Instead of that, however, he has contented himself with seeking to buy from the state that which, it has been decided, the state had no right to sell.

It is possible, also, that, by the practice in California, Mace might have contested the title of the state before the surveyor-general, and had the case referred to the District Court for the

Digitized by Google

purpose of determining that title, and having a trust declared in his favor under the listing which had been made. The cases of *Tyler* v. *Houghton*, 25 Cal. 26, and *Thompson* v. *True*, 48 Cal. 601, 608, indicate that this might be done, but such, as we have seen, is not the purpose of this suit. For all the purposes of the present inquiry, the right of the state to have the lands listed under the act of 1841 must be considered as admitted, and the litigation confined to the contest between the parties as to which has the better right to buy from the state. According to the respective claims of the parties, Merrill did buy in 1857, and Mace made application to buy in 1874. Both claim under the state. If Merrill actually did buy, as he says he did, the title of the state inured to his benefit under the act of Congress as soon as it passed from the United States. If he did not, then, so far as the record discloses, Mace might have had the right to buy when he made application for that purpose. The determination of this question, as the case comes here, involves no Federal right in Mace which has been denied him by the decision of the court below. We consequently have no jurisdiction, and the cases of *Romie* v. *Casanova*, 91 U. S. 379, *McStay* v. *Friedman*, 92 U. S. 723 and *Hastings* v. *Jackson*, 112 U. S. 233, are directly to that effect. Indeed the case of *Hastings* v. *Jackson* is strikingly like this in its material facts.

The writ of error is dismissed for want of jurisdiction.

EX PARTE MIRZAN.

ORIGINAL.

Submitted December 20, 1886. — Decided January 10, 1887.

This court will not issue a writ of *habeas corpus*, even if it has the power (about which no opinion is expressed), in cases where it may as well be done in the proper Circuit Court, if there are no special circumstances in the case making direct action or intervention by this court necessary or expedient.

Digitized by Google

Statement of Facts.

This was a motion for leave to file a petition for a writ of *habeas corpus*. The allegations were that the petitioner was a citizen of the United States temporarily residing in Alexandria, in Egypt, in the Ottoman Dominions, in 1880; that while there at that time he was accused of the murder of one Alexander Dahon in Alexandria; that by direction of the then Secretary of State, Horace Maynard, Esq. then Minister of the United States at Constantinople proceeded to Alexandria for the purpose of presiding over his trial on that accusation; that he was arraigned before Mr. Maynard on a criminal information presented by George O. Batchellor, and held to answer for a capital crime without presentment or indictment by a grand jury, and without a trial by jury or by any person except the minister; that he was convicted and, by the said minister, was sentenced to death; that thereafter by order of the President of the United States he was removed from the Ottoman Dominions to the penitentiary at Albany, in the state of New York; that he was at the time of the motion deprived of his liberty and held in custody in said penitentiary under color of authority of the United States; that during all these times it was time of peace, and not time of war or public danger; and that the case did not arise in the land or naval forces or in the militia of the United States, nor was the petitioner at any time in such forces or militia. The petition alleged that all these acts took place without warrant of law, and were void, and in violation of the Constitution and laws of the United States, and of the rights of the petitioner as a citizen of the United States, for various reasons which were set forth at length in the petition. The prayer of the petition was as follows:

"Wherefore your petitioner prays that the writ of *habeas corpus* do issue from this court, directed to John McEwen, the Warden of the Penitentiary of the state of New York at Albany, commanding him, on a day certain therein to be named, to bring before this court the body of the petitioner, together with the cause of his detention, and to abide such further orders as your Honors and this court may direct.

"And your petitioner further prays that each, every, and all

Digitized by Google

the proceedings aforesaid, and the sentence aforesaid, may be declared by this court to be null and void; and that the petitioner be released and discharged from the custody and imprisonment in which he is now held by color of the authority of the United States."

Mr. Lorenzo Ullo for petitioner.

MR. CHIEF JUSTICE WAITE delivered the opinion of the court.

This motion is denied. As since the act of March 3, 1885, 23 Stat. 437, an appeal lies to this court from the judgments of the Circuit Courts in *habeas corpus* cases, this court will not issue such a writ, even if it has the power — about which it is unnecessary now to express an opinion — in cases where it may as well be done in the proper Circuit Court, if there are no special circumstances in the case making direct action or intervention by this court necessary or expedient. In this case there are no such special circumstances, and the application may as well be made to the Circuit Court for the Northern District of New York as here. Our right to exercise this discretion is shown by the principles on which the decisions in *Ex parte Royall*, Nos. 1 and 2, 117 U. S. 241, and *Ex parte Royall*, 117 U. S. 254, rest. This practice was suggested by us and followed in *Wales* v. *Whitney*, 114 U. S. 564. *Denied.*

HANCOCK *v.* HOLBROOK.

APPEAL FROM THE CIRCUIT COURT OF THE UNITED STATES FOR THE EASTERN DISTRICT OF LOUISIANA.

Submitted December 13, 1886. — Decided January 10, 1887.

A suit cannot be removed from a State Court to a Circuit Court of the United States on the ground of prejudice or local influence, under subsection 3 of § 639 Rev. Stat., unless all the plaintiffs or all the defendants are citizens of the state in which the suit was brought, and of a state other than that of which those petitioning for the removal are citizens.

Digitized by Google

This was an appeal from an order of the Circuit Court remanding to a State Court a cause removed thence to the Circuit Court. The case is stated in the opinion of the court.

Mr. J. D. Rouse and *Mr. William Grant* for appellant.

Mr. Thomas J. Semmes and *Mr. Robert Mott* for appellees.

MR. CHIEF JUSTICE WAITE delivered the opinion of the court.

The order remanding this case is affirmed. A suit cannot be removed from a State Court to a Circuit Court of the United States under subsection 3 of § 639 of the Revised Statutes on the ground of "prejudice or local influence," unless all the plaintiffs or all the defendants are citizens of the state in which the suit was brought, and of a state other than that of which those petitioning for the removal are citizens. Here it appears that Hancock, the plaintiff, on whose petition the removal was had, is a citizen of New York, and Eliza Jane Holbrook and George Nicholson, two of the defendants, and those principally interested in the litigation, citizens of Mississippi, while R. W. Holbrook and Richard Fitzgerald, the other defendants, are alone citizens of Louisiana, where the suit was brought. These Louisiana defendants are necessary parties to the suit, but, according to the record, those who are citizens of Mississippi are the real parties in interest. *Affirmed.*

BORER v. CHAPMAN.

APPEAL FROM THE CIRCUIT COURT OF THE UNITED STATES FOR THE DISTRICT OF MINNESOTA.

Argued December 13, 14, 1886. — Decided January 10, 1887.

A, a citizen of New Jersey, recovered judgment in a civil action on a contract against B, a citizen of Minnesota, whose property and estate were situated, principally, in California. B died leaving a will by which he devised real estate and bequeathed legacies to various persons in Minne-

Digitized by Google

sota. The will was admitted to probate in Minnesota, and letters testamentary thereon were issued to C and D. Ancillary proof of it was then made in California, and letters testamentary thereon were issued to D, who administered the estate in California in accordance with the laws of that state, and distributed it according to the will, and rendered a final account to the probate court in California, and was discharged by that court. A did not present his claim for payment in California, and has never been paid. He brought suit on it in Minnesota against C as executor. C appeared and, among other defences, denied that he was or ever had been executor. The court found that C had accepted the trust, and entered judgment for A, on which judgment execution was awarded *de bonis propriis*. C brought the judgment to this court by writ of error, and died while it was pending here. His executor appeared, and on his motion the judgment was reversed as erroneous in form, *Smith* v. *Chapman*, 93 U. S. 41, and, the cause being remanded, the court on the previous finding entered judgment for A, *nunc pro tunc*, as of the date of the first judgment. A, within twelve months from the date when the last judgment *nunc pro tunc* was ordered, commenced suit in Minnesota to recover the amount of his judgment the statute of that state giving to the unpaid creditors of a testator a right of action against legatees, provided the action is allowed within one year from the time when the claim is established; and courts of Minnesota having settled that the claim must first be established by judicial proceedings, and that the suit against the legatees must be brought within one year from the date of such establishment. *Held:*

(1) That the former judgment in this court concluded the executor of C in this suit from contending that C had not accepted the trust as executor.

(2) That A was not barred by the proceedings and decrees in California from the prosecution of the suit.

(3) That he had the right to follow into the hands of their holders in Minnesota the assets of B which had been distributed by order of the probate court in California.

(4) That there was nothing to interfere with that right, in the provision of the Constitution respecting the faith to be given to judgments and public acts of each state in every other state.

(5) That this action was not barred by the limitation in the Minnesota statute.

Whether an order for entry of judgment *nunc pro tunc* shall be made, is matter of discretion with the court, to be exercised as justice may require, in view of the circumstances of the particular case; and it is a proper exercise of that discretion when, by reason of the intervening death of a party, there would otherwise be a failure of justice for which the other party is not responsible.

The equity jurisdiction of this court is independent of that conferred by the states on their own courts, and can be affected only by the legislation of Congress.

Digitized by Google

Opinion of the Court.

For the purpose of a statute of limitations the date of the entry of a judgment *nunc pro tunc* is the date of the order of such entry, and not the day as of which the judgment is ordered to take effect.

This was a bill in equity filed by the defendant in error, complainant below, to enforce payment of a judgment rendered against one John Gordon in his lifetime out of assets belonging to the estate of Gordon which had come into the possession of the various defendants, either as executors or administrators, or as devisees or legatees under his will. The case is stated in the opinion of the court.

Mr. W. P. Clough, for appellants, cited: *In re Garraud's Estate*, 36 Cal. 277; *Reynolds* v. *Brumagim*, 54 Cal. 254; *In re Henry C. Hudson's Estate*, 63 Cal. 454.

Mr. E. M. Wilson and *Mr. Charles W. Hornor*, for appellee, cited: *Smith* v. *Chapman*, 93 U. S. 41; *Watkins* v. *Holman*, 16 Pet. 25; *Montgomery* v. *Sawyer*, 100 U. S. 571; *Mackey* v. *Coxe*, 18 How. 100, 104; *State* v. *Alverez*, 7 La. Ann. 284; *Fishmongers* v. *Robinson*, 3 C. B. 970; *Matheson* v. *Grant*, 2 How. 263, 282; *Mitchell* v. *Overman*, 103 U. S. 62; *Ex parte Morgan*, 114 U. S. 174; *May* v. *Le Claire*, 11 Wall. 217.

Mr. Justice Matthews delivered the opinion of the court.

This is a bill in equity filed on the 20th of August, 1879, in the Circuit Court of the United States for the District of Minnesota, by George M. Chapman, a citizen of the state of New Jersey, executor of the last will and testament of Eunice Chapman, deceased, against Felix A. Borer, administrator with the will annexed of the estate of John Gordon, deceased, Edson R. Smith, executor of the last will and testament of George D. Snow, deceased, Elizabeth Hewitt and Thomas P. Hewitt, her husband, Harriet Cecilia Snow, Sarah Ann Powell, and Georgiana Smith; the defendants being all citizens of the state of Minnesota. The object and prayer of the bill were to marshal the assets of the estate of John Gordon, deceased, alleged to have been received by the defendants either as his

Digitized by Google

representatives or legatees, for the purpose of applying them to the payment of a judgment recovered by the complainant against George D. Snow, as executor of John Gordon. The case was heard upon the pleadings and proofs, and a decree rendered in favor of the complainant below, to reverse which the defendants prosecute the present appeal.

The facts in the case on which the decree is predicated are as follows: On January 4, 1864, George M. Chapman, executor of Eunice Chapman, recovered judgment in the Supreme Court of the state of New York against John Gordon and two others in a civil action founded on contract for the sum of $4759.80, damages and costs. On May 14, 1867, Gordon, then a citizen of Minnesota, having his domicil in the county of Le Sueur in that state, made and published his last will, and within a few days thereafter died in that county. On July 1, 1867, his will was duly presented to the probate court of that county for proof and allowance by George D. Snow, and was duly admitted to probate and record, and letters testamentary in the usual form were made out and recorded, directed to Snow and Clark, his executors. By that will Gordon made numerous bequests and devises, among which was one of $30,000 in money to Harriet Cecilia Snow, wife of George D. Snow; another of $6000 in money to Sarah Ann Kniffen, now Sarah Ann Powell; another of a like amount to Georgiana Kniffen, now Georgiana Smith; three small tracts of land in Le Sueur County, Minnesota, with certain personal property then situated thereon, to Margaret Elizabeth Hewitt, and, in addition thereto, the sum of $2000 to Margaret Elizabeth Hewitt and her heirs; and the residue of the estate, after the payment of debts, funeral expenses, costs of administration, and legacies, to George D. Snow. The legatees resided in Le Sueur County, Minnesota. Gordon had previously lived in San Francisco, California, where nearly the whole of the estate was situated. The executors named in the will were George D. Snow and Pomeroy D. Clark, the latter a resident of San Francisco. In the bequests to the Misses Kniffen, and the cash portion of that to Mrs. Hewitt and her heirs, it was provided that the money should be paid into the hands of

Digitized by Google

George D. Snow, to be held and managed by him as their trustee for certain designated periods. It does not appear from the records of the probate court of Le Sueur County that either Clark or Snow ever accepted letters testamentary, or took the oath, or gave the bond required from executors by the statutes of Minnesota, or ever filed in that court any inventory of Gordon's estate, or ever did any other act in respect to the estate under such letters.

After proof of the will in Le Sueur County, Minnesota, a properly authenticated copy of the same, together with the proof and allowance thereof, was forwarded to Clark in San Francisco, who took such proceedings thereon in the probate court of San Francisco that the will was there admitted to record, and letters testamentary thereon issued to Clark solely on August 5, 1867. Snow never in any manner appeared in the California proceedings, except to receive and receipt for his legacy. Clark, as executor in California, took the usual and necessary proceedings under the laws of that state for the collection and distribution of the estate. An inventory and appraisement of the property were filed, and notice given by publication to creditors to present their claims to the executor for payment. On November 5, 1868, Clark presented to the probate court his final accounts as executor, with his petition for their allowance, the hearing of which was set for November 17, 1868, and public notice given thereof in accordance with the local law. On December 10, 1868, the probate court made its order allowing and confirming the accounts, on which date Clark filed a further petition in the probate court, praying for a decree of distribution and a final order discharging him from the office and trust of executor of Gordon's will. The court thereon made an order calling on all persons interested in the estate of John Gordon to appear before the court on January 11, 1869, to show cause why an order should not be made distributing the residue of the estate to George D. Snow, the residuary legatee. In pursuance thereof, and on the date fixed for the hearing, the court made its final decree of distribution, in which, among other things, it was ordered, adjudged, and decreed that all the acts and proceedings of the

Digitized by Google

said executor, as reported to that court and appearing upon the records thereof, should be and thereby were approved and confirmed, and that the residue of the estate should be and was thereby assigned to the said George D. Snow. On January 12, 1869, the court made its further and final order in the proceedings, discharging Clark from the executorship, the will having been fully and completely executed to the satisfaction of the court. Clark's accounts filed with the probate court show the payment of all the money legacies hereinbefore mentioned to the respective legatees prior to August 1, 1868. The residue decreed to George D. Snow, as residuary legatee, had been turned over to him by Clark prior to January 12, 1869. The indebtedness from Gordon and his associates to Chapman, arising upon the judgment in New York, has never been paid, and no claim based thereon was ever presented to Clark or to the probate judge for the city and county of San Francisco. A transcript of the judgment was procured by Chapman and forwarded to Snow in Minnesota about October 23, 1867, and, after some correspondence between them in respect to its allowance and payment, an action at law was brought thereon in the Circuit Court of the United States for the District of Minnesota by Chapman, as executor, against George D. Snow and P. D. Clark, described as the executors of the last will and testament of John Gordon, deceased. In that action process was served upon Snow, but Clark was not found. Snow appeared and defended, denying in his answer that he was or ever had been the executor of Gordon's will, and pleading that Clark, as executor in California, had fully administered the assets which had come to his hands, and had been discharged by the probate court of that state from his said office. At the June term, 1871, of the Circuit Court, the issues were found in favor of the plaintiff and against Snow, and judgment rendered thereon for the sum of $7264.25 and costs. In that action, although brought against Snow and Clark as executors in their official capacity, judgment was finally rendered against Snow personally, and execution awarded *de bonis propriis*. A writ of error from the Supreme Court of the United States to reverse that judgment was sued out, pending which, in the

Digitized by Google

year 1873, Snow died testate, leaving Edson R. Smith as the executor of his will, who was thereupon substituted as plaintiff in error in this court. At the October term, 1876, a decision was rendered in this court, reversing the judgment of the Circuit Court on the ground that it was erroneous in form, inasmuch as the action was debt on judgment recovered against the deceased testator of the defendant, and nothing was alleged in the declaration to show that the defendant had become personally liable for the judgment debt. *Smith* v. *Chapman*, 93 U. S. 41. The cause was therefore remanded to the Circuit Court, with instructions to take further proceedings therein in conformity with the opinion. The mandate of this court having been filed on June 7, 1877, in the Circuit Court, the cause came on to be heard at the December term, 1878, upon an order theretofore granted the plaintiff, George M. Chapman, executor, &c., on his petition, directed to Edson R. Smith, as executor of Snow's will, and Felix A. Borer, who had been appointed administrator *de bonis non* with will annexed of John Gordon, deceased, to show cause why the said Borer, administrator aforesaid, should not be substituted as such administrator in the place of George D. Snow, deceased, as defendant in said cause, and why judgment should not be entered in favor of the plaintiff upon the previous findings of the court in the premises; and said Felix A. Borer, administrator as aforesaid, having objected to said substitution, it was ordered by the court that he should not be required against his objection to be substituted as defendant as aforesaid, and the motion of the plaintiff for such substitution was for that reason denied. The judgment of the Circuit Court then proceeds as follows: "And it is further ordered, considered, and adjudged that judgment shall be, and the same is hereby, entered in favor of said plaintiff, George M. Chapman, executor of the last will and testament of Eunice Chapman, deceased, *nunc pro tunc*, upon the said decision and findings of the court as of the 10th day of July, A.D. 1871, against the said George D. Snow in his capacity as executor of the last will and testament of John Gordon, deceased, for the sum of $7264.25, and costs, taxed at $62.76, to be paid and enforced out of the effects of the testa-

Digitized by Google

tor, John Gordon, deceased, with interest on said sum of $7264.25 from said 10th day of July, 1871, and that said judgment be also certified by this court to the probate court of the county of Le Sueur, Minnesota, as a claim duly allowed and adjudged against the said estate of John Gordon, deceased."

Felix A. Borer had been appointed administrator *de bonis non*, with the will annexed, of John Gordon, by the probate court of Le Sueur County, on July 7, 1874, upon the petition of Chapman setting forth the recovery of his judgment in the Circuit Court of the United States, the pendency of the writ of error from the Supreme Court, and the fact that Clark had never qualified in the Minnesota proceedings, and that Snow in his lifetime had denied the acceptance of the executorship of Gordon's will. Borer has ever since remained administrator by virtue of said appointment.

Upon these facts the cause came on for final hearing in the Circuit Court, where a decree was rendered in favor of the complainant, the court being of the opinion —

"1st. That George D. Snow, appointed executor by the will of John Gordon, deceased, accepted the trust and had the will proved in Le Sueur County, Minnesota.

"2d. That this court has jurisdiction to grant the relief asked for by complainant's bill, for the reason that a court of equity can decree that a legatee under a will, after distribution, holds property in trust when valid debts of the decedent remain unpaid, and follow the property or its proceeds in the legatee's hands.

"3d. That the estate of George D. Snow is liable for the debt set up in the complaint; and if the estate of Snow is not sufficient to respond to the full amount, the deficiency can be supplied out of the estate of the residuary legatee, Mrs. Snow.

"4th. That the complainant's debt is not barred by the statute of limitations."

It was found by the decree that no assets of the estate of John Gordon had come into the hands of Felix A. Borer, as administrator; that on the 12th day of January, 1869, George D. Snow, after payment of all debts, funeral expenses, legacies,

Digitized by Google

and all claims owing or payable by the estate of John Gordon, except the claim or debt owing to Chapman, received under the will of Gordon property belonging to said Gordon of the value of $10,777.00; that by the will of George D. Snow, his wife, Harriet Cecilia Snow, was made his residuary legatee; and that the estate of Snow is solvent, and sufficient to pay all his debts and to fulfil all the provisions of the will, with an excess of assets thereon of not less than $100,000 in value, including over $20,000 in cash, for said Harriet Cecilia Snow as such residuary legatee; that she has, as such residuary legatee, received from Edson R. Smith, as executor of the will of George D. Snow, an amount more than sufficient to pay the claims of the plaintiff, with interest and costs; and that upon the death of George D. Snow, Edson R. Smith, as the executor of his will, collected and received the sum of $2824.82, being the proceeds of a claim or debt owing to the said John Gordon at the time of his death, and a part of the estate of the said John Gordon. It also appears that there are no outstanding and unpaid claims against the estate of Gordon, except that due on the judgment in favor of the complainant below.

The errors assigned by the appellants are as follows:

1st. The Circuit Court erred in holding that the said George D. Snow had ever in any manner become executor of Gordon's will, or chargeable as such.

2d. The court erred in holding that the judgment in the suit at law of Chapman against Snow, entered on December 18, 1878, *nunc pro tunc*, as of July 10, 1871, was of any force or effect whatever, as against the estate of said John Gordon, or that of the said George D. Snow.

3d. The court erred in holding that the relief prayed in the bill had not been barred by the proceedings and decrees of the probate court for the city and county of San Francisco, in the state of California.

4th. The court erred in holding that the relief prayed by the bill had not been barred by laches and the lapse of time, and the several statutes of limitations set up and referred to in the answers of the defendants to the bill of complaint.

5th. The court erred in holding and adjudging that the

Digitized by Google

estate of the said George D. Snow is liable for the claim or debt owing to the said George M. Chapman, executor.

6th. The court erred in holding that if the estate of the said George D. Snow should not be sufficient to respond to the full amount of said claim or debt, the deficiency should be paid by the said Harriet Cecilia Snow.

The first error assigned is that the court erred in deciding that George D. Snow was chargeable as executor of Gordon's will. It is too late to raise that question in this cause. It was one of the matters in issue in the action brought by Chapman, executor, against Snow, executor, in the Circuit Court of the United States for the District of Minnesota, wherein it was expressly held and adjudged that George D. Snow was executor of John Gordon, deceased. The judgment in that case was reversed upon the application of Snow's personal representatives on the express ground that it was made payable out of the personal effects of Snow, when it ought to have been *de bonis testatoris.* That judgment concludes the question in this cause.

It is next contended, however, that that judgment is of itself void as having been rendered on the 18th of December, 1878, against Snow, as executor, who was then dead, although the entry was made to take effect as of July 10, 1871. The law on the subject of entries *nunc pro tunc* was fully considered and stated by this court in the case of *Mitchell* v. *Overman*, 103 U. S. 62, 64. It was there stated, "that, where the delay in rendering a judgment or a decree arises from the act of the court, that is, where the delay has been for its convenience or has been caused by the multiplicity or press of business, or the intricacy of the questions involved, or for any other cause not attributable to the laches of the parties, but within the control of the court, the judgment or the decree may be entered retrospectively as of a time when it should or might have been entered up. In such cases, upon the maxim *actus curiæ neminem gravabit*, which has been well said to be founded in right and good sense, and to afford a safe and certain guide for the administration of justice, it is the duty of the court to see that the parties shall not suffer by the delay. A *nunc pro*

Digitized by Google

tunc order should be granted or refused, as justice may require, in view of the circumstances of the particular case." [1]

This rule was applied in the case of *Coughlin* v. *District of Columbia*, 106 U. S. 7, 11. In that case, a judgment rendered upon a verdict in favor of the plaintiff had been erroneously set aside in the same court. A new trial was had, and a judgment for the defendant was reversed by this court, which affirmed the original judgment for the plaintiff as of the date when it was rendered, in order to prevent the action from being abated by the intervening death of the plaintiff.

In the present instance, upon the findings as originally made by the Circuit Court, judgment should have been rendered against Snow *de bonis testatoris;* the error of the court was in making it payable *de bonis propriis.* For this error it was reversed on the application of Smith, executor of Snow, who had procured himself to be substituted as plaintiff in error for that purpose. The mandate of this court was sent to the Circuit Court in form, reversing the original judgment, but, in substance, simply requiring its correction in the one particular in which the error had been committed. The manner in which this duty of the Circuit Court was performed, under the mandate of this court, was to enter the judgment *nunc pro tunc*, as of the time when it should have been entered in proper form. The reversal of the judgment in the Circuit Court, by the operation of the mandate of this court, and the execution of that mandate by the Circuit Court in entering the new judgment, was one continuous judicial act, and to that Smith, as executor of Snow, was a party, for he was a party to the record as plaintiff in error in this court. It cannot, therefore, be said that the action of the Circuit Court was *ex parte*, or that it was void, because it was directed against a deceased person not represented. This objection, if valid, would prevent, in all cases of the death of one of the parties, the entry of a judgment *nunc pro tunc.* It is the fact of such intervening death that creates the necessity, by which the power is justi-

[1] *Note by the Court.* This passage is incorrectly printed in the volume of reports.

Digitized by Google

fied, in order to prevent a failure of justice, for which the other party is not responsible, and by which, therefore, he should not suffer. The action of the court in making the entry in the form in which it was made was also, we think, a proper exercise of its discretion upon the circumstances of the case, as the object of the proceeding was to fix the liability of the estate of Gordon, as represented by his executor, Snow, in order that the judgment of Chapman might furnish ground for a creditor's bill, seeking to apply the assets of Gordon's estate to its payment. We hold, therefore, that the entry of the judgment against Snow, as executor of Gordon, was a valid and effectual exercise of the power and discretion of the court, and that the validity of the judgment itself cannot be impeached.

It is insisted, however, that the relief prayed for by the bill and awarded by the court, was barred by the proceedings of the probate court for the city and county of San Francisco. The statutes of California, Hittell, Gen. Laws California, 1850–1864, provide, that if a claim against the estate of a decedent, in course of distribution in the probate court, shall not be presented within ten months after the first publication of the notice to creditors, it shall be barred forever; unless when it shall be made to appear by the affidavit of the claimant, to the satisfaction of the executor and administrator and the probate judge, that the claimant had no notice, as provided by the act, by reason of being out of the State, in which case it may be presented at any time before a decree of distribution is entered. 5828, § 130. It is also provided, 5944, § 246, that, when the accounts of the administrator or executor have been settled, and an order made for the payment of debts and distribution of the estate, no creditor, whose claim was not included in the order of payment, shall have any right to call upon the creditors who have been paid, or upon the heirs, devisees, or legatees to contribute to the payment of his claim; but, if the executor or administrator shall have failed to give the notice to the creditors, as prescribed by the act, such creditor may recover on the bond of the executor or administrator the amount of his claim, or such part thereof as he would have

Digitized by Google

been entitled to had it been allowed. It is further provided, 5977, § 279, that, when an estate has been fully administered, and it is shown by the executor or administrator, by the production of satisfactory vouchers, that he has paid all sums of money due from him, and delivered up, under the order of the court, all the property of the estate to the parties entitled, and performed all the acts lawfully required of him, the court shall make a decree discharging him from all liability thereafter.

It is argued that Chapman, as a creditor of Gordon's estate, was bound to make himself a party to the proceedings in the probate court of San Francisco, for the purpose of obtaining payment and satisfaction of his claim; that, failing to do this, he is barred from any right to recover, either from the executor of that estate or from any legatee; that the defendants in this bill, as legatees of Gordon, received what was due them under his will under the sanction and by the order and judgment of the probate court of San Francisco, which vested them with an indefeasible title which must be respected in every other forum, if full faith and credit, according to the Constitution of the United States, is to be given in other states to the public acts and judicial proceedings of the courts of California.

But these positions are not tenable. The administration of the estate of Gordon, in California, under the orders of the probate court of San Francisco, was merely ancillary; the primary administration was that of the testator's domicil, Minnesota. Chapman was not a citizen of California, nor resident there; he was no party to the administration proceedings; he was not bound to make himself such. If he had chosen he could have proved his claim there and obtained payment, but he had the right to await the result of the settlement of that administration, and look to such assets of Gordon as he could subsequently find in Minnesota, whether originally found there or brought there from California by the executors or legatees of Gordon's estate. The assets in California finally distributed there, and brought into Minnesota by the executor or by any legatee, remained assets in Minnesota for the payment of any unpaid creditors choosing that forum. Such assets were impressed with a trust which such creditor had a right to have

Digitized by Google

administered for his benefit. *Aspden* v. *Nixon*, 4 How. 467; *Stacy* v. *Thrasher*, 6 How. 44; *Hill* v. *Tucker*, 13 How. 458; *Mackey* v. *Coxe*, 18 How. 100. It is upon the ground of such a trust that the jurisdiction of courts of equity primarily rests in administration suits, and in creditors' bills brought against executors or administrators, or after distribution against legatees, for the purpose of charging them with a liability to apply the assets of the decedent to the payments of his debts. As a part of the ancient and original jurisdiction of courts of equity, it is vested, by the Constitution of the United States and the laws of Congress in pursuance thereof, in the Federal courts, to be administered by the circuit courts in controversies arising between citizens of different states. It is the familiar and well settled doctrine of this court that this jurisdiction is independent of that conferred by the states upon their own courts, and cannot be affected by any legislation except that of the United States. *Suydam* v. *Broadnax*, 14 Pet. 67; *Hagan* v. *Walker*, 14 How. 28; *Union Bank* v. *Jolly*, 18 How. 503; *Hyde* v. *Stone*, 20 How. 170; *Green* v. *Creighton*, 23 How. 90; *Payne* v. *Hook*, 7 Wall. 425, 430.

In *Payne* v. *Hook*, *ubi supra*, the rule was declared in these words: "We have repeatedly held that the jurisdiction of the courts of the United States over controversies between citizens of different states cannot be impaired by the laws of the states which prescribe the modes of redress in their courts, or which regulate the distribution of their judicial power. If legal remedies are sometimes modified to suit the changes in the laws of the states and the practice of their courts, it is not so with equitable. The equity jurisdiction conferred on the Federal courts is the same that the High Court of Chancery in England possesses; is subject to neither limitation nor restraint by state legislation, and is uniform throughout the different states of the Union."

The only qualification in the application of this principle is, that the courts of the United States, in the exercise of their jurisdiction over the parties, cannot seize or control property while in the custody of a court of the state. *Williams* v. *Benedict*, 8 How. 107; *Yonley* v. *Lavender*, 21 Wall. 276; *Freeman* v. *Howe*, 24 How. 450.

Digitized by Google

This exception does not apply in the present case, for the assets sought by this bill to be marshalled in favor of the complainant are not in the possession of any other court; they are in the hands of the defendants, impressed with a trust in favor of the complainant, a creditor of Gordon, and subject to the control of this court by reason of its jurisdiction over their persons.

It is further contended, however, on the part of the appellants, that, if the relief sought in this bill is not barred by the administration proceedings in California, it is, nevertheless, defeated by the application of the statute of limitations of the state of Minnesota. The statute of Minnesota, Gen. Stat. 1883, 826, c. 77, gives to unpaid creditors of the testator an action against the legatees, in which the plaintiff, in order to recover, is required to show that no assets were delivered by the executor or administrator of the deceased to his heirs or next of kin; or that the value of such assets has been recovered by some other creditor; or that such assets are not sufficient to satisfy the demands of the plaintiff. In the last case he can recover only the deficiency. The whole amount of the recovery shall be apportioned among all the legatees of the testator in proportion to the amount of their legacies respectively; his proportion only being recoverable against each legatee. In respect to this statutory right of action, however, it is provided in the same act, § 16, that no such action shall be maintained unless commenced within one year from the time the claim is allowed or established. It is maintained that, according to the judicial decisions of Minnesota, the creditor is required, first, to establish his claim by a separate judicial proceeding, and in a subsequent suit obtain the recovery provided for against the legatees. *Bryant* v. *Livermore*, 20 Minn. 313. It is admitted that the suit brought by Chapman in the Circuit Court of the United States against Snow, for the purpose of establishing his claim against Gordon's estate, answers the first of these conditions, but that, in order to fulfil the second, the present bill should have been filed within one year from the date of the final judgment in that action. The date of the judgment as originally rendered against Snow was April 19, 1872; the present bill was filed

Digitized by Google

August 20, 1879; and we are asked to hold that the right to sue was at that time barred by the statute of limitations. But the judgment rendered April 19, 1872, was not the end of the litigation; Snow himself sued out his writ of error to reverse it, and upon his death, in 1873, his executor, Smith, became a party, as plaintiff in error, and prosecuted the writ until the reversal of the judgment at the October term, 1876. The mandate of this court was filed in the Circuit Court June 7, 1877, and on December 18, 1878, the final judgment was entered against Snow as executor, to be paid and enforced out of the effects of the testator, John Gordon, deceased, as of July 10, 1871. The present bill was filed within twelve months after the date of that entry. If, for the purpose of determining the application of the statute of limitations, this judgment may be considered as dating from December 18, 1878, the bar was not complete. It is contended, however, that, as the entry of the judgment was made on that date *nunc pro tunc* as of July 10, 1871, the latter must be considered as the effective date of the judgment for all purposes. We are not, however, of that opinion. The date of that entry is by a fiction of law made and considered to be the true date of the judgment for one purpose only, and that is to bind the defendant by the obligation of the judgment entered as of a date when he was in full life; but the right of the complainant in this bill to enforce that judgment by the present proceeding certainly did not begin until after the judgment in that form was actually entered. Until that time the right was in abeyance; the litigation had, until then ended, been continuously in progress. It cannot be that the statute of limitations will be allowed to commence to run against a right until that right has accrued in a shape to be effectually enforced.

In *Tapley* v. *Goodsell*, 122 Mass. 176, it was held that a judgment entered *nunc pro tunc* was the final judgment in the action, so as to charge sureties on an attachment bond, on whose behalf it was urged that they could not be considered in default by reason of not paying, for thirty days after its date, the amount of a judgment which had no actual existence until long after the thirty days had expired. And it was

Digitized by Google

there pointed out that a judgment may have effect from one date for one purpose and from another date for another purpose. As in the case of judgments at common law, which had relation to the first day of the term, so as to bind the lands of the debtor of which he was then seised, even though he had aliened them *bona fide* before judgment actually signed and execution issued; and the statute, 29 Car. II, c. 3, §§ 13–15, providing that, as against *bona fide* purchasers, they should be deemed judgments only from the time when they were actually signed, did not restrict their validity or effect, in law or equity, by relation to the first day of the term, as against the debtor or other persons. *Odes* v. *Woodward*, 2 Ld. Raym. 766; *S. C.* 1 Salk. 87; *Robinson* v. *Tonge*, 3. P. Wms. 398.

It follows, therefore, that, if this were a suit brought in a state court of Minnesota under the statute in question, it would not be barred by the limitation sought to be applied. Whether that statute has any application to this bill in equity, filed in the Circuit Court of the United States for the District of Minnesota, by a citizen of another state, is a question which need not be considered or decided. It is enough to say that the right of the complainant is not barred by force of the state statute, and that, according to the principles of equity, there has been no such voluntary delay as would make his claim stale. On the contrary, the complainant has shown himself to be diligent, active, and eager in the prosecution of his claim and the pursuit of his remedy. He has been guilty of no laches; the delay has been caused by the action of his adversaries, or by the necessary delays of litigation. He is an unpaid creditor of Gordon's estate, who has sought by every means in his power, both at law and in equity, to obtain satisfaction of a just claim. The defendants are shown to be in possession of the assets of Gordon's estate, which ought to have been applied in its satisfaction; they should be held as trustees for that purpose. Such was the decree of the Circuit Court, which is hereby

Affirmed.

Digitized by Google

IVINSON *v.* HUTTON.

APPEAL FROM THE SUPREME COURT OF THE TERRITORY OF WYOMING.

Argued December 2, 1886. — Decided January 10, 1887.

On a finding in the court below (1) that certain parol testimony is inadmissible because it tends to vary, explain, contradict or qualify a written instrument discharging a mortgage; and (2) that if admitted it was not sufficient to prove any qualification or modification of the discharge, — it is immaterial in this court whether the court below was right in holding that the exception taken there to the parol evidence was error.

This was a suit to foreclose a mortgage. The case is stated in the opinion of the court.

Mr. Samuel Shellabarger and *Mr. Jeremiah M. Wilson* for appellant.

Mr. W. W. Corlett for appellees.

Mr. Justice Miller delivered the opinion of the court.

This is an appeal from the Supreme Court of the Territory of Wyoming. The suit was brought by Edward Ivinson, the appellant, in the District Court of the Second Judicial District of that Territory, to foreclose a mortgage on certain real estate, made to him by Charles H. Hutton. To the bill Joseph M. Carey and R. Davis Carey are made defendants, upon an allegation that they claim some interest in the property. The defendants made a joint answer, in which they all set up a full release of the mortgage and satisfaction of the debt by Ivinson before the defendants Carey obtained their interest in the property; and whether this be true or not is the only point in the case.

It is not denied that when the defendants, the Careys, were about to let Hutton have ten thousand dollars on this land, and take absolute deeds of conveyance for it, they required that

Digitized by Google

the title to it should be made clear and relieved of Ivinson's mortgage. Thereupon Ivinson made an entry on the margin of the record of the mortgage, as follows:

"I hereby acknowledge satisfaction in full of the debt for which this mortgage was given to secure, and hereby discharge and cancel the same, this sixth day of October, 1877.

"E. IVINSON.

"Attest: J. W. MELDRUM, *Register of Deeds.*"

The Supreme Court of the Territory, from which this appeal is taken, made a finding of facts by which we are to be governed in the decision of this appeal. From this finding it appears that in April, 1873, Hutton made his promissory note to Edward Ivinson for $13,582.54, with interest, and that on the same day he executed the mortgage which is the foundation of this foreclosure suit to secure the payment of the note. Subsequent to this, Ivinson asserted that a mistake had been made in computing the balance due him in the settlement on which the note and mortgage were given, and that they should have been for $17,618.66, instead of the sum actually put in the mortgage and note, making a difference of $4036.12. Ivinson brought a suit to correct this mistake, which finally came to the Supreme Court of the United States, where he prevailed, obtaining a decree for the correction of the mistake in the note and mortgage. These proceedings lasted from August, 1873, to March, 1879.

Pending this controversy, however, Ivinson and Hutton made a written agreement to adjust their differences, other than this controversy, but it was expressly agreed that the controversy, then pending in this court, was left out of the settlement by the following language: "Provided always, that nothing herein contained shall be construed in any wise to affect the rights of the parties hereto in said suit between them now depending in the Supreme Court of the United States."

This agreement was made on the 31st of May, 1877, and is marked Exhibit D in the record before us. On the 6th day of October, 1877, Ivinson, Hutton, and Joseph M. Carey were at

Digitized by Google

the court-house in Laramie City, for the purpose of concluding a loan of ten thousand dollars, which Carey was about to make on behalf of himself and brother to Hutton, to enable him to pay his debts, including a judgment in favor of Creighton against Ivinson and Hutton, amounting to nearly six thousand dollars. This loan was to be secured by real estate, part of which was covered by Ivinson's mortgage. Before paying over the money to Hutton, Carey required of Ivinson and Hutton, that Hutton's property should be released from all incumbrances, and Ivinson entered on the margin of the record of his mortgage the discharge which we have already transcribed.

The court then further finds as follows:

"That said discharge was not made in accordance or in pursuance of the agreement of the 31st of May, A.D. 1877, above recited, marked Exhibit D, but was an absolute, unqualified release and cancellation of the mortgage. The court further finds that the value of the property mortgaged was not less than twenty thousand dollars.

"4th. On the trial of the case in the District Court the testimony of eight witnesses, to wit: Edward Ivinson, M. C. Brown, J. M. Carey, Charles H. Hutton, Stephen W. Downey, Walter Sinclair, H. B. Rumsey, and J. W. Blake, which had been taken before J. W. Meldrum, master in chancery, was read in evidence. To so much of said evidence as was intended to vary, explain, or contradict or qualify the entry of the discharge on the margin of the record of the mortgage by Ivinson the defendant excepted as incompetent. This court holds that said exception was well taken, and that parol evidence was not competent for that purpose or to prove that the discharge was made in accordance with Exhibit D.

"5th. But the court further holds, that if said parol testimony was properly admitted for said purpose, that it is not sufficient, that it does not prove any qualification or modification of the discharge as entered on the record, nor that said discharge was made in accordance with the agreement of the 31st of May, marked Exhibit D.

"6th. This court makes no finding upon the question

Digitized by Google

whether the $4036.12 was paid by Hutton at the time of the discharge of the mortgage or at any other time, holding the decision of that question unnecessary to the determination of this suit."

On these findings the bill of complaint of Ivinson was dismissed. The conveyances of the property in controversy, which were made by Hutton to the Careys, are absolute deeds on their face, and both the Careys and Hutton insisted in their answer that the note and mortgage were absolutely discharged and satisfied according to the terms of the indorsement made by Ivinson on the record of the mortgage. This is also the finding of the Supreme Court of the Territory. The argument used in opposition to this is, that the Supreme Court and the court below erred in rejecting the evidence mentioned in the fourth finding of fact, and it is insisted that because of the error in this respect the entire decree should be reversed. But, in point of fact, this testimony was read in evidence in the lower court, notwithstanding the objection of the plaintiff, and was considered for what it may possibly be worth also in the Supreme Court; for that court, in its fifth finding, says, that, if said testimony was properly admitted for the purpose claimed, it is not sufficient, and does not prove any qualification or modification of the discharge as entered on the record, nor that said discharge was made subject to the agreement of the 31st of May, marked Exhibit D. It will be seen that the controversy mainly hinged upon the question whether the discharge on the margin of the record of the mortgage made by Ivinson was made subject to this written agreement with Hutton, namely, that the controversy concerning the $4036.12 involved in the suit then pending in the United States Supreme Court was excepted out of the adjustment of their differences, evidenced by Exhibit D, and that this question should be governed by the final decision of that suit.

On this issue the court distinctly finds, that said discharge was not made in accordance with or in pursuance of that agreement, but was an absolute and unqualified release and cancellation of the mortgage, and that, if said parol testimony was properly admitted, it does not prove that the discharge

Digitized by Google

was made in accordance with the agreement above referred to. It is, therefore, entirely immaterial whether the Supreme Court was right in holding that the exception to the parol evidence taken in the court below was error, since it further holds that, giving full effect to that evidence, it does not prove anything to impeach the force and effect of the language of the discharge and release of the mortgage and note.

We do not think that, on the finding of facts made by the Supreme Court, there is any doubt of the correctness of its final decree, and it is, therefore,

Affirmed.

IRON MOUNTAIN AND HELENA RAILROAD *v.* JOHNSON.

ERROR TO THE DISTRICT COURT OF THE UNITED STATES FOR THE EASTERN DISTRICT OF ARKANSAS.

Argued December 10, 1886. — Decided January 10, 1887.

There is nothing in the nature of the possession of a railroad, or of a section of a railroad, which takes it out of the operation of the language of the Statutes of Arkansas against forcible entry and detainer, or out of the general principle which lies at the foundation of all suits of forcible entry and detainer, that the law will not sanction or support a possession acquired by violence, but will, when appealed to in this form of action, compel the party who thus gains possession to surrender it to the party whom he dispossessed, without inquiring which party owns the property or has the legal right to the possession.

This was an action of forcible entry and detainer. The case is stated in the opinion of the court.

Mr. Walter H. Smith for plaintiffs in error. *Mr. John F. Dillon* also filed a brief for them.

Mr. Attorney General for defendant in error. *Mr. J. C. Tappan* and *Mr. John J. Hornor* were with him on the brief.

Digitized by Google

MR. JUSTICE MILLER delivered the opinion of the court.

This is a writ of error to the District Court of the United States for the Eastern District of Arkansas.

The suit was commenced by an action of forcible entry and detainer brought by Johnson, the present defendant in error, against the Iron Mountain and Helena Railroad Company, and the St. Louis, Iron Mountain and Southern Railway Company was in the progress of the case made a defendant on its own petition. The action was to recover possession of eighteen miles of a railroad which Johnson had built for the defendant, and from which he had been ejected by force and violence by the Iron Mountain and Helena Railroad Company. On the trial before a jury Johnson recovered a verdict on which a judgment was entered for restitution to the possession of the road. To reverse this judgment the present writ of error is brought.

Although there is some controversy about the validity and effect of the contract under which Johnson constructed and held possession of this eighteen miles of road, part of a larger road of the defendant, the main facts on which his right to recover depend are simple and not much controverted. Whatever may be the truth about the validity and construction of the contract under which he built the road for the company, it is fully established that, after he had built it, and before they had paid him for it, he was in possession of it, using it by running his own locomotives over it, and that while thus in peaceable possession and claiming a right to hold it until he was paid for building it, he was by force and violence turned out of this possession by the railroad company, its officers and agents.

The statute of Arkansas relating to forcible entries and detainers is to be found in Chap. LXVII, Mansfield's Digest, [1884] as follows:

"SEC. 3346. No person shall enter into or upon any lands, tenements, or other possessions, and detain or hold the same, but where an entry is given by law, and then only in a peaceable manner.

Digitized by Google

"SEC. 3347. If any person shall enter into or upon any lands, tenements, or other possessions, and detain or hold the same with force and strong hand, or with weapons, or breaking open the doors and windows or other parts of the house, whether any person be in or not; or by threatening to kill, maim, or beat the party in possession; . . . or by entering peaceably and then turning out by force, or frightening by threats or other circumstances of terror the party to yield possession; in such case every person so offending shall be deemed guilty of a forcible entry and detainer within the meaning of this act."

"SEC. 3368. Nothing herein contained shall be construed to prevent any party from proceeding under this act by filing his complaint and causing an ordinary summons to be issued without filing the affidavit or giving the obligation hereinbefore required, and in all cases, when the judgment shall be for the plaintiff, the court shall award him a writ of restitution to carry such judgment into execution."

The main objection relied upon by plaintiff in error to the recovery of the plaintiff below is that a railroad is not real estate, nor such an interest in real estate that it can be recovered by actions applicable to that class of property. It is argued that a railroad is a complex kind of incorporeal hereditament, the possession of which is not authorized to be changed by an action of forcible entry and detainer. We do not think this objection would be a good one if in the state of Arkansas that action were left as it was at common law. The statute of that state, however, which we have just quoted materially enlarges the extent and operation of this action. The language of both §§ 3346 and 3347 makes it applicable to "lands, tenements, or other possessions," and declares that "if any person shall enter into or upon any lands, tenements, or other possessions, and detain or hold them with force and the strong hand, or with weapons, . . . or frightening by threats or other circumstances of terror the party to yield possession, in such case every person so offending shall be deemed guilty of a forcible entry and detainer within the meaning of this act."

We do not see any reason in the nature of the possession of

Digitized by Google

a section of a railroad which takes it out of the language of this statute, or out of the general principle which lies at the foundation of all suits of forcible entry and detainer. The general purpose of these statutes is, that, not regarding the actual condition of the title to the property, where any person is in the peaceable and quiet possession of it, he shall not be turned out by the strong hand, by force, by violence, or by terror. The party so using force and acquiring possession may have the superior title or may have the better right to the present possession, but the policy of the law in this class of cases is to prevent disturbances of the public peace, to forbid any person righting himself in a case of that kind by his own hand and by violence, and to require that the party who has in this manner obtained possession shall restore it to the party from whom it has been so obtained; and then, when the parties are in *statu quo*, or in the same position as they were before the use of violence, the party out of possession must resort to legal means to obtain his possession, as he should have done in the first instance. This is the philosophy which lies at the foundation of all these actions of forcible entry and detainer, which are declared not to have relation to the condition of the title, or to the absolute right of possession, but to compelling the party out of possession, who desires to recover it of a person in the peaceable possession, to respect and resort to the law alone to obtain what he claims.

It occurs to us that this principle is as fully applicable to the possession of a railroad, or a part of a railroad, as to any other class of landed interests. And in fact, that, of all owners or claimants of real estate, large corporations, with vast bodies of employés and servants ready to execute their orders, are the last persons who should be permitted to right themselves by force. The language of the presiding judge in his charge to the jury in this case meets our entire approval, and we quote from it as follows:

"The law will not sanction or support a possession acquired by such means, but will, on the contrary, when appealed to in this form of action, compel the party who thus gains possession to surrender it to the party whom he dispossessed, without

Digitized by Google

inquiring which party owns the property or has the legal right to the possession. If the law was otherwise, force, the exhibition and use of deadly weapons, and threats of personal violence, would speedily take the place of lawful and peaceful methods of gaining possession of property. The law compels a defendant, found guilty of a forcible entry and detainer, to restore the possession. After he has restored the possession so forcibly and wrongfully acquired, he can then proceed in a lawful manner to assert his claim to the property; but he cannot have his legal rights to the property, or its possession, adjudged or determined in the action of forcible entry and detainer, when, by his own admission or the proof in the case, he is shown to be guilty of a forcible entry and detainer. If, therefore, you find that the plaintiff built the eighteen miles of road in controversy, and had been in the quiet and peaceable possession of the same from the time of its completion, claiming the right to such possession under the contract, and that, while so in the quiet and peaceable possession of the road, Bailey, the president of the defendant corporation, with a force of men acting in the name and on behalf of the defendant corporation, by force and strong hand, or with weapons, or by threatening to kill, maim or beat, or by such words and actions as have a natural tendency to excite fear or apprehension of danger, drove the plaintiff's agents or employés out of his cars and off the road with the declared purpose of retaining the possession of the same, then the defendant corporation is guilty of a forcible entry and detainer within the meaning of the statutes of this state, and the plaintiff is entitled to your verdict."

In this view of the case nearly all the questions raised by counsel for plaintiff in error, in regard to the contract under which Johnson built this eighteen miles of road, and held possession of it, and his right to hold possession, are immaterial. The jury must have found, under this charge, that he was in the peaceable and quiet possession of the property, and was ejected from it by the force and violence and wrong-doing of the Iron Mountain and Helena Railroad Company. They

Digitized by Google

were not bound to inquire any further, nor are we bound to answer other questions.

The judgment of the District Court is

Affirmed.

EX PARTE RALSTON.

ORIGINAL.

Argued and submitted December 20, 1886. — Decided January 10, 1887.

The clerk below is not required to furnish a transcript of the record in a cause in error, until a writ of error has issued to which it can be annexed.

In error to a state court it has been the prevailing custom, from the beginning, for the clerk of this court or the clerk of the Circuit Court for the proper circuit to issue the writ, and for such writ to be lodged with the clerk of the state court before he could be called on to make the necessary transcript to be lodged in this court.

This court is without jurisdiction to vacate a supersedeas granted where no writ of error was sued out, as it has no legal effect.

These were applications to the court as a court of original jurisdiction (1) for a writ of mandamus to compel the clerk below to send up a transcript of a record, and (2) to vacate a supersedeas. The case is stated in the opinion of the court.

Mr. S. Prentiss Nutt for the motion for a mandamus, and opposing the motion as to supersedeas.

Mr. James Lowndes, on behalf of *The British and American Mortgage Company, Limited*, for the motion to vacate the supersedeas.

Mr. Chief Justice Waite delivered the opinion of the court.

This is an application for a writ of mandamus requiring the clerk of the Supreme Court of the state of Louisiana to transmit to this court a true copy of the record in that court of a judgment in the suit of the British and American Mortgage Company against Mrs. E. J. Ralston and her husband, omit-

Digitized by Google

ting therefrom certain portions not material to the Federal question involved. From the showing made it sufficiently appears that the judgment was rendered April 5, 1886, and that on the 31st of May, 1886, the Chief Justice of the state court allowed a writ of error to this court, "on furnishing bond, with security, according to law, for one thousand dollars, not to operate as a supersedeas." No writ was, however, issued in fact, but the order of allowance, with the petition therefor, was filed in the office of the clerk of the state court, "and a demand made on the clerk . . . for a copy of the record." According to the statements in the petition, the clerk refused to give such a transcript unless it should include everything used on the trial in the state court, but the petitioner wanted only such parts of the record as were necessary to present the single question of which this court had jurisdiction.

After the allowance of the writ by the Chief Justice of the state court, on application of the petitioner, Mr. Justice Woods, the Associate Justice of this court allotted to the Fifth Circuit, made this order, evidently supposing that a writ of error had actually been issued:

"A writ of error having been allowed in this case, and a bond given and duly approved, without an allowance of supersedeas, though the right of supersedeas is claimed by Mrs. E. J. Ralston, the plaintiff in error, it is ordered that further proceedings to enforce executory process in execution sought to be enforced in this case in the Supreme Court of Louisiana, or in the District Court from which the case was appealed to said Supreme Court of Louisiana, be suspended until the further order of the Supreme Court of the United States."

From this statement it is apparent that we have no authority over the clerk in the matter about which the mandamus is asked. As no writ of error has in fact been issued, we have no jurisdiction of the suit. *Mussina* v. *Cavazos*, 6 Wall. 355, 358; *Bondurant* v. *Watson*, 103 U. S. 278. Waiving the question whether the clerk of the state court could issue the writ on the allowance of the Chief Justice of that court, which, to say the least, has never yet been held by this court, *McDonogh* v. *Millaudon*, 3 How. 693, it is sufficient to say that he never has

Digitized by Google

done so, and, so far as this record shows, he has never been asked to do it. Certainly it has been the prevailing custom from the beginning for the clerk of this court, or the clerk of the Circuit Court for the proper district, to issue the writ, and for such a writ to be lodged with the clerk of the state court before he could be called on to make the necessary transcript for use in this court. Consequently, the simple lodging of the allowance with him cannot be considered as a demand for the writ; and, besides, this proceeding is not to require him to issue the writ, but to furnish a transcript to be annexed to and returned with the writ, (Rev. Stat. § 997,) which it is not his duty to give until there is a writ to which it can be annexed and with which it can be returned. The application for the mandamus is consequently denied.

Pending these proceedings for mandamus the British and American Mortgage Company has filed a motion to vacate the supersedeas allowed by Mr. Justice Woods. But, as no writ of error has ever been issued, that order has no legal effect. A supersedeas cannot be allowed except as an incident to an appeal actually taken or a writ of error actually sued out. We, however, are as much without jurisdiction to vacate the order of the Justice as he was without jurisdiction to grant it. Consequently, the motion to vacate must be denied, although the order as it stands is of no validity.

Both motions denied.

CHICAGO AND ALTON RAILROAD v. WIGGINS FERRY COMPANY.

ERROR TO THE SUPREME COURT OF THE STATE OF MISSOURI.

Argued October 22, 25, 1886. — Decided January 10, 1887.

The constitutional requirement that "full faith and credit shall be given in each state to the public acts, records, and judicial proceedings of every other state" implies that the public acts of every state shall be given the same effect by the courts of another state that they have by law and usage at home.

Digitized by Google

Whenever it becomes necessary under Article IV, § 1 of the Constitution for a court of one state, in order to give faith and effect to a public act of another state, to ascertain what effect it has in that state, the law of the other state must be proved as a fact.

The courts of the United States, when exercising their original jurisdiction, take notice without proof, of the laws of the several states of the United States; but in this court, when acting under its appellate jurisdiction, whatever was matter of fact in the state court whose judgment or decree is under review, is matter of fact here.

When the decision of a state court holding a contract valid or void is made upon the general principles by which courts determine whether a consideration is good or bad on principles of public policy, no question arises under the provision of the Constitution respecting the faith and credit to be given in each state to the public acts, records, and judicial proceedings of another state, and this court cannot review the decision.

In order to give this court jurisdiction to review a decision of a state court respecting the power of a corporation of another state to make contracts it is not sufficient to aver in the pleadings that whatever force might be given to it in the court of the forum, it was beyond the powers of the corporation under its act of incorporation as construed by the courts of the state incorporating it; but it must appear affirmatively in the record that the facts as presented for adjudication, made it necessary for the court to consider and give effect to the act of incorporation in view of the peculiar jurisprudence of the state enacting it rather than the general law of the land.

This was a motion to dismiss for want of jurisdiction. It was submitted on the 19th April, 1886, at the last term of court, and was ordered to be argued at the hearing on the merits. The case is stated in the opinion of the court.

Mr. Henry Hitchcock for the motion. *Mr. G. A. Finkelnburg* was with him on the brief.

Mr. C. Beckwith opposing.

Mr. Chief Justice Waite delivered the opinion of the court.

The Federal question which it is claimed arises on this record is, whether the Supreme Court of Missouri in its judgment gave "full faith and credit" "to the public acts, records, and judicial proceedings" of Illinois.

The facts are these: The Wiggins Ferry Company was in-

Digitized by Google

corporated by the state of Illinois in 1853, and given the exclusive and perpetual right of maintaining and operating a ferry across the Mississippi River between its own lands in East St. Louis, on the Illinois side, and St. Louis in Missouri. It owned Bloody Island and substantially controlled two miles and a half of ferry landing on the Illinois shore.

The Chicago and Alton Railroad Company is likewise an Illinois corporation, having authority to own and operate a railroad between Chicago and Bloody Island, opposite the city of St. Louis, and to "take, use, and make arrangements for the transportation of freight and passengers carried, or to be carried, upon said railroad, or otherwise, . . . to St. Louis, Missouri, and for this purpose to construct, own, and use such boat or boats as may be necessary."

The Alton and St. Louis Railroad Company was also an Illinois railroad corporation, authorized to construct and operate a railroad from Alton, Illinois, to any point opposite St. Louis. On the 28th of April, 1864, this company entered into a contract with the Wiggins Ferry Company, by which, among other things, the ferry company agreed "to furnish and maintain good and convenient wharf boats and steam ferry boats to do with promptness and despatch all the ferrying required for the transit of passengers and freight coming from or going to said railroad (or the assignee hereinafter mentioned) over the river," at reasonable rates of ferriage; and the railroad company covenanted and agreed that it would "always employ the said ferry to transport across the said river all persons and property which may be taken across the said river, either way, to or from the Illinois shore, either for the purpose of being transported on said railroad, or having been brought to the said river, Mississippi, upon said railroad. So that the said ferry company, its legal representatives or assigns, owners of the said ferry, shall have the profits of the transportation of all such passengers, persons and property, taken across said river either way by said railroad company; and that no other than the Wiggins Ferry shall ever, at any time, be employed by the said party of the second part, or the assignee herein mentioned, to cross any passengers or freight coming or going on said road."

Digitized by Google

And it was also agreed and understood that the Alton and St. Louis company should have the right to transfer and assign the agreement to the Chicago and Alton company, in which event all the covenants, stipulations, and agreements therein contained should be as binding on the said Chicago and Alton company as on the Alton and St. Louis company.

On the same day that the contract was entered into the Alton and St. Louis company transferred to the Chicago and Alton company all its right, title, and interest in and to the lands, tenements, and easements mentioned therein, and the Chicago and Alton company became bound to the ferry company in all respects the same as the Alton and St. Louis company was.

This suit was brought by the ferry company in a state court of Missouri against the Chicago and Alton company to recover damages for not employing the ferry company for the transportation of persons and property across the river, as by the contract it was bound to do. The railroad company set up by way of defence, among other things, that "it had no power or authority to make or enter into any agreement whatever, perpetually obliging itself . . . not to cross persons and property, nor not to employ others to do so in the manner alleged in the petition; and that, if the provisions of said articles of agreement contain, by construction, any such provision, the same were and are in violation of the laws of the state of Illinois, and contrary to the public policy thereof, and are void and of no effect."

The answer further alleged that the railroad company, at the time of the transfer of the contract to it, "was a public common carrier as a railroad company, duly incorporated by law, with power and right to construct and operate its railroad, and to transport persons, passengers, freight, and property to and from the city of St. Louis, in the state of Missouri, across and over said river, and on or over its railroad, as the public interest required; that it was and still is the legal right and duty of defendant to furnish and supply the mode and means of transportation needed and required from time to time by the public welfare for passengers and property to

Digitized by Google

and from said city over said river, and to, on, and over defendant's railroad; that the public welfare and the necessities of shippers of property and freight to and over said railroad, and to and from said city, required that certain freights and property, to be transported by defendant to and from said city, should be transported by it to and from said city across said river, and to and from and along defendant's railroad, in the cars in which it might be, and over and across said river, without breaking bulk and without being removed from such cars, and without being taken by hand or by wagons or other appliances, in packages, from or to the cars, from or to ferry-boats, to be ferried across said river; and that since said assignment other and improved modes of transportation across said river, without breaking bulk, and at other points on said river opposite the city of St. Louis, were and have been provided and established, and it was and became the duty of defendant, as such common carrier, to accommodate the public by the use of such other modes of transportation; and that any provision of said contract which would prohibit defendant from using the same for the benefit and convenience of the public was and is against public policy and void, and defendant was not and is not bound thereby."

Upon the trial the statutes under which the railroad company was incorporated and from which it derived its corporate powers were offered in evidence. They confer upon the company all the usual powers of railroad corporations, and, either expressly or by implication, subject it to corresponding obligations to the public. No testimony was offered, so far as the record discloses, to show that the courts of Illinois had decided, or that it had been established by law or usage in that state, that this corporation, or any other having similar powers, could not make such a contract as had been entered into.

After the evidence was all in, the railroad company asked the court to rule, among other things, as follows:

"If, at the time the contract sued on was made and was assigned to defendant, the plaintiff was a common ferry, incorporated under the laws of Illinois, with power to have and use a ferry within limits opposite to a portion only of the

Digitized by Google

city of St. Louis, and the Alton and St. Louis Railroad Company was a common carrier, incorporated under the laws of Illinois, in evidence, with authority and franchise to have and to use a railroad in said state to a point opposite to the city of St. Louis, Missouri, and defendant was a common carrier, incorporated under the laws of Illinois, in evidence, with franchises and authority to have and use a railroad from Chicago, by way of Alton, in said state, to the Mississippi River, opposite to said city of St. Louis, and carry persons and property to and from St. Louis, and to and from and over such railroad, and to have or use boats for such purpose, then the provisions of said contract between plaintiff and the Alton and St. Louis Railroad Company, that said railroad company would always employ plaintiff or its ferry to transport across the Mississippi River all persons and property which might be taken across said river, either way, to or from the Illinois shore, either for the purpose of being transported on its railroad, or having been brought to said river on said road, so that plaintiff, its representatives or assigns, should have the profits of the transportation of all such persons, passengers, and property taken across the river either way, by said Alton and St. Louis Railroad Company, and that no other than plaintiff (or its ferry) should ever, at any time, be employed by said Alton and St. Louis Railroad Company, or the assignee therein mentioned, to cross any passengers or freight coming or going on said road, were and are illegal, and defendant had no legal right or authority to bind itself to comply with or perform the same, and plaintiff cannot recover herein for non-performance thereof by defendant."

There were other requests of a similar character, but this contains the substance of all that was asked, so far as the questions for our consideration are concerned. These requests were refused, but the trial court did rule that the railroad company "did not covenant or contract that all persons and property coming on its road to St. Louis, or going from St. Louis to be carried on its road, should be crossed over the Mississippi River by plaintiff, or at plaintiff's ferry, but only such as said railroad company, or its assignee, should employ or procure the

Digitized by Google

ferriage for or have ferried; and that if other persons than . . . the defendant caused, employed, did, or procured the ferriage or crossing over said river of persons or property coming on the road of . . . defendant to St. Louis, or going from St. Louis to be carried on said road, by other means or ferry than plaintiff or its ferry, defendant is not liable therefor, and defendant was not bound to cause or procure such persons or property to be crossed at plaintiff's ferry." The court also ruled that the contract was not "void as being in restraint of trade," nor "as being beyond the powers of the corporations parties thereto," "nor as beyond the powers of the Chicago and Alton Railroad Company to become the assignee thereof and be bound thereby," nor "as being contrary to public policy."

Under these and other instructions, not important for the purposes of the present inquiry, the cause was sent to a referee to take testimony and report the damages. The referee in his report construed the contract to mean that "where the defendant received and billed freights for carriage over its own road at places or for destinations beyond the termini of its road, so that a ferry had to be used to transfer the freights between the city of St. Louis and the Illinois shore, it was the duty of the defendant, whether acting as carrier or forwarder, to give the ferriage to the plaintiff, and good faith required the defendant to conform its acts and contracts of carriage to this obligation." He then said: "If the contract has the above scope and meaning, I am convinced that the defendant has not acted in good faith towards the plaintiff;" and the damages were found and reported on this theory of the case.

The trial court confirmed the referee's report and gave judgment accordingly. The case was then taken to the St. Louis Court of Appeals, where the judgment of the trial court was reversed, because, in its opinion, the referee did not proceed on a correct legal theory and held the railroad company too strictly to the letter of the contract, without looking sufficiently to the facts surrounding it when made. This judgment of the Court of Appeals was reversed, on appeal, by the Supreme Court of the state, and that of the trial court affirmed,

Digitized by Google

on the ground that the contract was interpreted correctly by that court, and that, being so interpreted, it was not "*ultra vires*, condemned by public policy or in restraint of trade." To reverse that judgment this writ of error was brought on the ground that full faith and credit was not given to the acts of incorporation of the railroad company, construed in the light of the judicial decisions and the accepted public law of Illinois.

A motion to dismiss for want of jurisdiction was made at the last term and continued for hearing with the case on its merits.

This motion is first to be considered. The railroad company set up in its answer, as a defence to the action, that it had no authority to make the contract sued on, and in support of this defence put in evidence its Illinois acts of incorporation. Without doubt the constitutional requirement, Art. IV, § 1, that "full faith and credit shall be given in each state to the public acts, records, and judicial proceedings of every other state," implies that the public acts of every state shall be given the same effect by the courts of another state that they have by law and usage at home. This is clearly the logical result of the principles announced as early as 1813 in *Mills* v. *Duryee*, 7 Cranch, 481, and steadily adhered to ever since. The claim of the railroad company is, that by law and usage in Illinois the operative effect of its charter in that state is to make such a contract as that now sued on *ultra vires*.

Whenever it becomes necessary under this requirement of the Constitution for a court of one state, in order to give faith and credit to a public act of another state, to ascertain what effect it has in that state, the law of that state must be proved as a fact. No court of a state is charged with knowledge of the laws of another state; but such laws are in that court matters of fact, which, like other facts, must be proved before they can be acted upon. This court, and the other courts of the United States, when exercising their original jurisdiction, take notice, without proof, of the laws of the several states of the United States; but in this court, when acting under its appellate jurisdiction, whatever was matter of fact in the court

Digitized by Google

whose judgment or decree is under review, is matter of fact here. This was expressly decided in *Hanley* v. *Donoghue*, 116 U. S. 1, in respect to the faith and credit to be given by the courts of one state to the judgments of the courts of another state, and it is equally applicable to the faith and credit due in one state to the public acts of another.

Whether the charter of this company, in its operation on the contract now in suit, had any different effect in Illinois from what it would have, according to the principles of general law which govern like charters and like contracts, in Missouri and elsewhere throughout the country, was, under this rule, a question of fact in the Missouri court, as to which no testimony whatever was offered. The case from the beginning to the end, both in the pleadings and in the requests for rulings, seems to have been considered by the parties and by the court as involving questions of general law only, which were not at all dependent upon anything peculiar to the jurisprudence of Illinois. Thus, while in the answer it is alleged, in effect, that the contract is "in violation of the laws of the state of Illinois and contrary to the public policy thereof," no proof was offered to support the averment, and the whole case was made to rest, so far as the testimony was concerned, on the further general allegation that the contract "was and is contrary to public policy and void." So, in the requests for findings, no special reliance was had on any peculiar law or usage in Illinois, but on the general claim that the contract "was illegal, and the defendant had no legal right or authority to bind itself to comply with and perform the same." And in the trial court the ruling was that the contract was "not void as being in restraint of trade," nor "as being beyond the powers of the corporations parties thereto," nor "as beyond the power of the Chicago and Alton Railroad Company to become the assignee thereof, and be bound thereby," nor "as being contrary to public policy." In the Supreme Court, whose judgment we are asked to review, the ruling and decision was even more general, for it was there held that the contract as interpreted was not "*ultra vires*, condemned by public policy or in restraint of trade." It thus appears con-

Digitized by Google

clusively, as we think, that both the parties and the court understood, as they certainly might from the way this case was presented, that the decision was to be made, not upon anything peculiar to the state of Illinois, but upon the general law of the land applicable to the facts established by the evidence. Such evidently was the ground of the decision, and that being so it is well settled we have no power to bring it under review. The decision would have been the same upon the case as made, whether the Constitution had contained the provision relied on or not. *Bethell* v. *Demaret*, 10 Wall. 537; *West Tennessee Bank* v. *Citizens' Bank*, 13 Wall. 432; *Delmas* v. *Insurance Co.*, 14 Wall. 661, in which it was expressly held that this court cannot review the decision of a state court holding a contract valid or void when "made upon the general principles by which courts determine whether a consideration is good or bad on principles of public policy." *Tarver* v. *Keach*, 15 Wall. 67; *Rockhold* v. *Rockhold*, 92 U. S. 129; *New York Life Ins. Co.* v. *Hendren*, 98 U. S. 286; *United States* v. *Thompson*, 93 U. S. 586; *Bank* v. *Mc Veigh*, 98 U. S. 332; *Dugger* v. *Bocock*, 104 U. S. 596, 601; *Allen* v. *Mc Veigh*, 107 U. S. 433; *San Francisco* v. *Scott*, 111 U. S. 768; *Grame* v. *Insurance Co.*, 112 U. S. 273. It is not enough to give us jurisdiction to say in the pleadings, or elsewhere in the course of the proceedings, that the contract, whatever it might be in Missouri, was beyond the powers of the company under its acts of incorporation as they were construed and given effect by law and usage in Illinois. It must somehow be made to appear on the face of the record that the facts as they were actually presented for adjudication made it necessary for the court to consider and give effect to the act of incorporation in view of some peculiar jurisprudence of Illinois rather than the general law of the land. That, as we have seen, was not done in this case. Consequently we have no jurisdiction, and the motion to dismiss is granted.

Dismissed.

Mr. Justice Matthews did not sit in this case.

Digitized by Google

COPE v. VALLETTE DRY DOCK COMPANY.

APPEAL FROM THE CIRCUIT COURT OF THE UNITED STATES FOR THE EASTERN DISTRICT OF LOUISIANA.

Argued December 6, 1886.—Decided January 10, 1887.

A fixed structure, contrived for the purpose of taking ships out of the water in order to repair them, and for no other purpose, consisting of a large oblong box, with a flat bottom and perpendicular sides, with no means of propulsion either by wind, steam, or otherwise, and not designed for navigation, but only as a floating dry-dock, permanently moored, is not a subject of salvage service.

This was an appeal from a decree of the Circuit Court dismissing a libel for salvage for want of jurisdiction. The case is stated in the opinion of the court.

Mr. J. R. Beckwith, for appellant, cited: *Ghen* v. *Rich*, 8 Fed. Rep. 159; *Taber* v. *Jenny*, 1 Sprague, 315; *Bartlett* v. *Budd*, 1 Lowell, 223; *Swift* v. *Gifford*, 2 Lowell, 110; *Fifty Thousand Feet of Timber*, 2 Lowell, 64; *Twenty-three Bales of Cotton*, 9 Ben. 48; 2 Twiss' Black Book of Adm. 471; 3 Ib. 439.

Mr. Alfred Goldthwaite, for appellees, cited: *The Hendrick Hudson*, 3 Ben. 419; Opinion of Mr. Justice Woods in this case below, 4 Woods, 265, and cases there cited; *Salvor Wrecking Co.* v. *Sectional Dock Co.*, 3 Cent. Law J. 640.

Mr. Justice Bradley delivered the opinion of the court.

This is a libel for salvage filed in the District Court for the Eastern District of Louisiana by the owners of the steam-tug Col. L. Aspinwall, her master and crew, and the owner of the steam-tug Joseph Cooper, and her crew, against the Vallette Dry Dock Company of New Orleans, to recover salvage for salving the company's dry-dock at Algiers, opposite New Orleans, from sinking and becoming a total loss. According

Digitized by Google

to the allegations of the libel, the said dry-dock was run into by the steamship Clintonia, which did not obey her helm, and by the force of the collision a large hole was broken into the side of the dock, extending below the water-line, and it began to fill with water, and commenced sinking, and would have sunk but for the exertions of the libellants, who hastened to its relief and applied their suction pumps in pumping out the water with which it was being filled, and thus at large expense and much trouble saved her from destruction. The libel alleges that the Vallette dry-dock is a large floating vessel and water-craft and artificial contrivance, used and capable of being used as a means of transportation in water, and was of great value, having cost upwards of $200,000, and was largely and profitably engaged in the business of docking vessels for repairs in the Mississippi River, and the libellants claim that their services were of the greatest merit, deserving a reward of at least $5000.

The respondents pleaded, first, *res judicata*, alleging that a similar libel for the same cause had been formerly filed in the same court and dismissed for want of jurisdiction. This plea was overruled. Their second plea was to the effect that the case is not one of admiralty and maritime jurisdiction; that the assistance rendered by the libellants to the dry-dock was not a salvage service; that the dry-dock is not devoted to the purpose of transportation and commerce, nor intended for navigation; that it is nothing more than pieces of lumber fastened together and placed upon the water to receive vessels for repair, and having engines used, not for the purpose of locomotion from one place to another, (of which, by its own resources, it is incapable,) but solely to lower and elevate said dock, in order to receive vessels for repair; that it was always solely employed in the business of docking and repairing vessels; that at the time of the alleged salvage services it was moored and lying at its usual place where it had been located ever since the year 1866. Proofs being taken, the District Court dismissed the libel upon the plea to the jurisdiction; and on appeal to the Circuit Court, the same decree was made.

Digitized by Google

The facts found by the Circuit Court substantially corroborate the plea. They describe the dry-dock as a structure contrived for the purpose of taking ships out of the water, in order to repair them, and for no other purpose. They state that it consisted of a large oblong box, with a flat bottom and perpendicular sides; that in the year 1866 it had been put in position by being permanently moored by means of large chains to the right, or Algiers, bank of the Mississippi River, and was sparred off from the bank by means of spars, to keep it afloat. When it was desired to dock a steamboat or other vessel, it was sunk by letting in water until the vessel to be docked could be floated into it. It was then raised by pumping the water out, leaving the docked vessel in a position to be inspected and repaired. It was furnished with engines, but they could only be used for pumping, and the dry-dock had no means of propulsion, either by wind, steam, or otherwise. It was not designed for navigation, and could not be practically used therefor. The circumstances of the collision and rescue were substantially as stated in the libel. As a conclusion of law, the Circuit Court found that the services of the libellants were not salvage services, and that neither that court nor the District Court had jurisdiction of the case.

We have no hesitation in saying that the decree of the Circuit Court was right. A fixed structure, such as this dry-dock is, not used for the purpose of navigation, is not a subject of salvage service, any more than is a wharf or a warehouse when projecting into or upon the water. The fact that it floats on the water does not make it a ship or vessel, and no structure that is not a ship or vessel is a subject of salvage. A ferry bridge is generally a floating structure, hinged or chained to a wharf. This might be the subject of salvage as well as a dry-dock. A sailor's floating bethel, or meeting-house, moored to a wharf, and kept in place by a paling of surrounding piles, is in the same category. It can hardly be contended that such a structure is susceptible of salvage service. A ship or vessel, used for navigation and commerce, though lying at a wharf, and temporarily made fast thereto, as well as her furniture and cargo, are maritime subjects, and

Digitized by Google

are capable of receiving salvage service. "Salvage is a reward or recompense given to those by means of whose labor, intrepidity, or perseverance a ship or goods have been saved from shipwreck, fire, or capture." 2 Bell's Com. Laws of Scotland, § 638, 7th Ed.; Ib., Principles of Laws of Scotland, 7th Ed. § 443. "Salvage," says Kent, "is the compensation allowed to persons by whose assistance a ship or its cargo has been saved in whole or in part from impending danger, or recovered from actual loss, in cases of shipwreck, derelict, or recapture." 3 Kent, 245. Lord Tenderden defines it as "the compensation that is to be made to other persons by whose assistance a ship or its lading may be saved from impending peril, or recovered after actual loss." Abbott on Shipping, 554. Sir Christopher Robinson defines salvage as follows: "Salvage, in its simple character, is the service which those who recover property from loss or danger at sea render to the owners, with the responsibility of making restitution, and with a lien for their reward." *The Thetis*, 3 Hagg. Adm. 14, 48. This definition is adopted by Machlachlan, in his Treatise on Merchant Shipping, Chap. XIII. 523. [2d Ed., page 569.] Sir John Nichol, in *The Clifton*, 3 Hagg. Adm. 117, 120, says: "Now, salvage is not always a mere compensation for work and labor; various circumstances upon public considerations, the interests of commerce, the benefit and security of navigation, the lives of the seamen, render it proper to estimate a salvage reward upon a more enlarged and liberal scale. The ingredients of a salvage service are, first, enterprise in the salvors in going out in tempestuous weather to assist a vessel in distress, risking their own lives to save their fellow-creatures, and to rescue the property of their fellow-subjects; secondly, the degree of danger and distress from which the property is rescued — whether it were in imminent peril, and almost certain to be lost if not at the time rescued and preserved; thirdly, the degree of labor and skill which the salvors incur and display, and the time occupied. Lastly, the value. Where all these circumstances concur, a large and liberal reward ought to be given; but where none, or scarcely any take place, the compensation can hardly be denominated a

Digitized by Google

salvage compensation; it is little more than a remuneration *pro opere et labore.*"

If we search through all the books, from the Rules of Oleron to the present time, we shall find that salvage is only spoken of in relation to ships and vessels and their cargoes, or those things which have been committed to, or lost in, the sea or its branches, or other public navigable waters, and have been found and rescued.

It is true that the terms "ships" and "vessels" are used in a very broad sense, to include all navigable structures intended for transportation. In a recent case decided by the Court of Appeal, in England, which arose upon that part of the Merchant Shipping Act, 17 and 18 Vict. c. 104, § 458, giving jurisdiction to justices of the peace in certain cases of salvage, "Whenever any ship or boat is stranded, or otherwise in distress, on the shore of any sea or tidal water situate within the limits of the United Kingdom" it was held (overruling Sir Robert Phillimore) that the word "ship" would include a hopper-barge used for receiving mud from a dredging-machine and carrying it out to deep water, though it had no means of locomotion of its own, but was towed by other vessels; it had a bow, stern and rudder, and was steerable. Lord Justice Brett said: "The words 'ship' and 'boat' are used; but it seems plain to me that the word 'ship' is not used in the technical sense as denoting a vessel of a particular rig. In popular language, ships are of different kinds; barques, brigs, schooners, sloops, cutters. The word includes anything floating in or upon the water, built in a particular form, and used for a particular purpose. In this case the vessel, if she may be so called, was built for a particular purpose; she was built as a hopper-barge; she has no motive power, no means of progression within herself. Towing alone will not conduct her; she must have a rudder; and, therefore, she must have men on board to steer her. Barges are vessels in a certain sense; and, as the word 'ship' is not used in a strictly nautical meaning, but is used in a popular meaning, I think that this hopper-barge is a 'ship.' . . . This hopper-barge is used for carrying men and mud; she is used in navigation; for to dredge up and carry away mud and gravel is an act

Digitized by Google

done for the purposes of navigation. Suppose that a saloon barge, capable of carrying 200 persons, is towed down the river Mersey in order to put passengers on board of vessels lying at its mouth; she would be used for the purposes of navigation, and I think it equally true that the hopper-barge was used in navigation." *The Mac*, 7 P. D. 126, 130; overruling *S. C.* Ib. 38.

Perhaps this case goes as far as any case has gone in extending the meaning of the terms "ship" or "vessel." Still, the hopper-barge was a navigable structure used for the purpose of transportation. We think no case can be found which would construe the terms to include a dry-dock, a floating-bridge, or meeting-house, permanently moored or attached to a wharf.

There has been some conflict of decision with respect to claims for salvage services in rescuing goods lost at sea and found floating on the surface or cast upon the shore. When they have belonged to a ship or vessel as part of its furniture or cargo they clearly come under the head of wreck, flotsam, jetsam, ligan, or derelict, and salvage may be claimed upon them. But when they have no connection with a ship or vessel some authorities are against the claim, and others are in favor of it. Decisions in favor of the claim in reference to rafts of timber found floating at sea were made by Judge Betts in the New York District, *A Raft of Spars*, 1 Abbott's Adm. 485, and by Judge Lowell in the Massachusetts District, 50,000 *Feet of Timber*, 2 Lowell, 64, and against it by Chief Justice Taney in the United States Circuit Court for the District of Maryland, *Tome* v. 4 *Cribs of Lumber*, Taney's Dec. 533, and by the English Court of Exchequer, in *Palmer* v. *Rouse*, 3 H. & N. 505. Perhaps the decisions in the last two cases were affected by local custom or statutory provisions. None of these cases, however, throw any light on the subject in hand. The case of *Salvor Wrecking Co.* v. *Sectional Dock Company*, reported in 3 Central Law Journal, 640, and the note appended thereto, may be referred to for an interesting discussion of the question. Judge Dillon, in that case, held that a dry-dock is not a subject of salvage service.

The judgment of the Circuit Court is affirmed.

Digitized by Google

SHARP v. RIESSNER.

APPEAL FROM THE CIRCUIT COURT OF THE UNITED STATES FOR THE SOUTHERN DISTRICT OF NEW YORK.

Argued December 16, 1886. — Decided January 10, 1887.

The first claim of letters-patent No. 177,334, granted to Abner B. Hutchins, May 16th, 1876, for an improvement in hydro-carbon stoves, namely, "1. The water-vessel A, with its perforated top-plate A′ and hot-air 'cylinder' C, hinged at *c* to plate A′, and top perforated plate L, all arranged and connected together substantially as and for the purpose set forth," the perforated top-plate A′ being described in the specification as a plate in which arranged around a central opening is a series of perforations "through which atmospheric air passes down into the top part of the vessel A, and thence up through the hot-air cylinder and its chimneys," is not infringed by a stove in which, instead of the perforated top-plate A′, there are three equidistant struts on which the hot-air cylinder rests, with an open space between every two of the struts, the struts not performing the office so described as that performed by the perforated top-plate A′.

This was a bill in equity for the infringement of letters-patent. The case is stated in the opinion of the court.

Mr. Arthur v. Briesen for appellant.

Mr. B. F. Lee for appellees.

Mr. Justice Blatchford delivered the opinion of the court.

This is a suit in equity brought for the alleged infringement of letters-patent No. 177,334, granted to Abner B. Hutchins, May 16th, 1876, for an improvement in hydro-carbon stoves. The specification and drawings are as follows:

"The object of this invention is to produce a stove which can safely and easily be heated by the combustion of a hydro-carbon or oil in a similar manner to that in common use in illuminating lamps.

"The invention consists of the following devices: The vessel or chamber containing the oil or hydro-carbon is submerged

Digitized by Google

in water, so as to always keep the said oil-vessel or chamber cool, and thereby free from explosive or other accident. The water-vessel is covered with a perforated metal plate, which forms the base of the hot-air cylinder, on the top of which the culinary or other vessels to be heated are placed. Vertical tubes or flues are placed in the hot-air cylinder in such positions as to act as chimneys for the burners. Mica win-

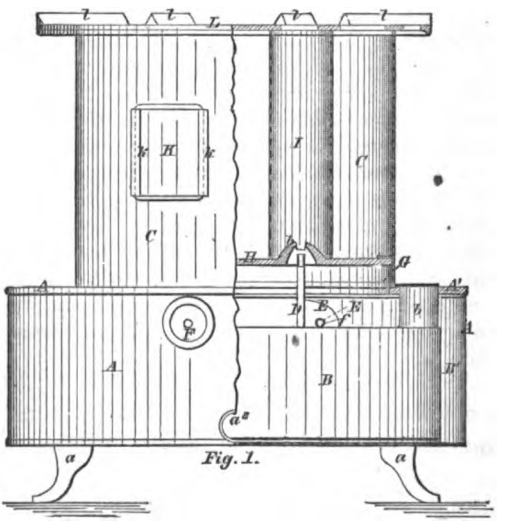

Fig. 1.

dows are placed in the sides of these flues or chimneys in such positions as to enable the operator to observe the flame of the burner and to regulate the same as circumstances may require.

"The invention will be readily understood by reference to the accompanying drawings, of which Figure 1 is partly an elevation and partly a vertical section of the improved stove. Fig. 2 is partly a plan and partly a section of the same. In this view the half of the top-plate only is removed, so as to disclose the construction of the hot-air cylinder and the flues or chimneys. Fig. 3 is a sectional plan of the stove, taken just below the top-plate of the water-chamber, and showing a part of the top-plate of the oil-vessel or reservoir broken out.

"The base of the stove consists of a vessel, A, resting, for

Digitized by Google

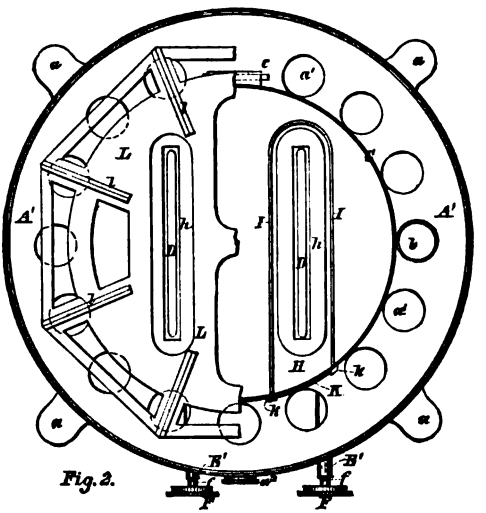

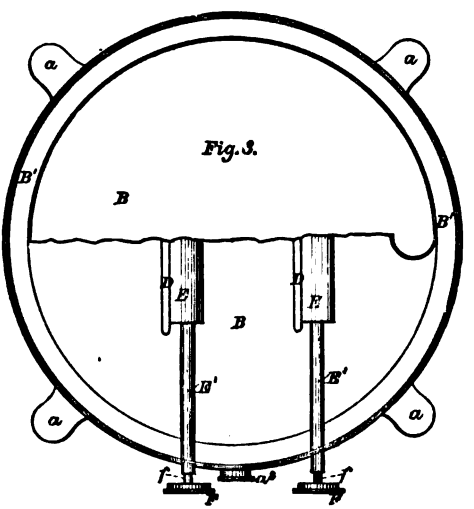

convenience, on short legs *a*. This vessel is intended to contain water, and has a top plate, A′, which is preferably made of cast metal, and strong enough to support all the parts of the stove which are above it. This plate A′ is annular in form if the stove is of general cylindrical construction (which is preferable to other forms), the central opening in the said

Digitized by Google

plate being nearly equal in area to the sectional area of the hot-air cylinder C, which rests upon it. Concentrically arranged around this central opening is a series of perforations, a^1, through which atmospheric air passes down into the top part of the vessel A, and thence up through the hot-air cylinder and its chimneys.

"The reservoir or vessel B, in which the oil or hydro-carbon is put for use in this stove, is placed within the vessel A, and the bottom of the vessel A may likewise constitute the support for the bottom of the vessel B, and there will be an intervening chamber, B′, between the sides of the vessel B and its inclosing vessel A, and the sides of the vessel A will extend up one or two inches (more or less) above the top of the vessel B. While in use the annular chamber B′ will be filled with water, and water will also cover the top of the vessel B, which said vessel and its contained fluid will thereby be always kept at a low temperature, and accident from the ignition or explosion of the oil or hydro-carbon will thus be rendered impossible by this water covering. A tube, *b*, extends from the vessel B up through one of the perforations or apertures a^1, and serves as a means of filling the vessel B. A suitable screw-cap closes the top end of this tube. A pipe or valve, a^2, leads from the chamber B′ to the outside of A, for the purpose of drawing off the water when it becomes heated, or when the occasion requires it. Water may easily be poured into the vessel A through the apertures a^1.

"The wick-tubes D are attached to the top of the vessel B, and the wick used to conduct the oil from B to the flame is operated in the usual manner of illuminating-lamps. The rollers for moving the wicks up and down are inclosed in casings or housings E, and are operated by the thumb-wheels F, the stems *f* of which pass through tubes E′, that are attached tightly to the ends of the housings E, and pass through the side of the vessel A. Care must be taken to have all of the parts of D E E′ that lie within the water-way of A perfectly water-tight, so as to prevent the leakage of the water either into the vessel B or outside of A.

"The hot-air cylinder C is preferably built of sheet metal,

Digitized by Google

and is hinged to its base-plate A′ by the hinge *c* at the back side of the stove, so as to permit the top parts of the stove to be tipped back out of the way of trimming the wicks, or for other purposes. A finely-perforated diaphragm, G, covers the central opening of the base-plate A′ below the hot-air cylinder, for the purpose of properly controlling the air-currents that pass up from the chamber of A into the hot-air cylinder. A diaphragm, H, within the hot-air cylinder C, and near its base, is fixed, by riveting or otherwise, to the sides of the said cylinder. Portions of this diaphragm are formed into conical flame-caps, *h*, for controlling and confining the flame within its proper limits in a manner similar to that in common use in illuminating-lamps.

"Above the diaphragms H tubes or chimneys I confine the hot gases and products of combustion from the flames of the burners within proper limits for the efficient action of the burners. These tubes or chimneys I extend from the diaphragm H to the top of the hot-air cylinder, and are preferably made of sheet metal. The shell of the hot-air cylinder C forms one side of each of these chimneys, and in this side, which is common to both the cylinder and the chimney, a small mica window, K, is placed, so as to enable the operator, from without, to see and regulate the flame of the burners by turning the thumb-wheel F, as required. For simplicity of construction I cut apertures in the side of the hot-air cylinder, suitable for the windows K, and through these apertures portions of the metal of the chimney-plates are extended, which said portions are bent over in the form of grooves *k*, as in Figs. 1 and 2, for the reception of the mica plates that are to form the windows.

"The top of the hot-air cylinder is covered with a cast-metal plate, L, that serves as a rest for whatever vessel is to be heated on this stove. The plate L is perforated with apertures over the chimneys, and also over the hot-wells of the cylinder C, as well as in the portions lying outside of the cylinder, thus permitting all of the heat generated to reach the vessel on top of the plate L, and thereby be utilized. The intense heat imparted to the plates of the chimneys I and

Digitized by Google

plate L, and reflected thence back upon the hot gases passing through and about these parts, will be quite sufficient to consume all of the smoke, and there will, in consequence, be no emission of unpleasant odors from imperfect combustion. The top surface of the plate L is provided with ridges *l*, that keep the vessels placed thereon from obstructing the openings in the said plate."

The claims are these:

"1. The water-vessel A, with its perforated top plate A′ and hot-air cylinder C, hinged at *c* to plate A′, and top perforated plate L, all arranged and connected together substantially as and for the purpose set forth.

"2. The chimneys I, having one of their sides formed by the hot-air cylinder C, to which they are connected by the groove-clips *k*, that also receive the mica windows K, as and for the purpose set forth."

It is contended that the defendants infringe the first claim. The Circuit Court dismissed the bill, 15 Fed. Rep. 919, holding that there was no infringement. The plaintiff has appealed.

One of the elements in the first claim is the "perforated top-plate A′," being the top-plate to the water-vessel A. It is described as annular in form, if the stove is cylindrical, with a central opening. The specification then says: "Concentrically arranged around this central opening is a series of perforations, a^1, through which atmospheric air passes down into the top part of the vessel A, and thence up through the hot-air cylinder and its chimneys." In the defendants' stove the hot-air cylinder rests on three equidistant struts, which extend from the base of the cylinder to the wall of the water-chamber, and thus the weight of the cylinder and of the utensils upon it is thrown against such wall instead of on the bottom of the water-chamber. Of course, there is an open space between every two of the struts, through which spaces air passes freely. The Circuit Court held that the arrangement of the three struts was not the plaintiff's perforated top-plate A′, because the struts did not perform the office which required the plate with perforations, that office being, as de-

Digitized by Google

scribed in the specification, to cause the air to pass "down into the top part of the vessel A, and thence up through the hot-air cylinder and its chimneys." We are of opinion that the first claim of the plaintiff's patent must be confined to the use of a perforated top-plate to the cylinder having the functions and mode of operation set forth in the specification, and that, as the defendants do not have such a perforated top-plate, or any equivalent for it, they do not infringe.

Decree affirmed.

BARRELL v. TILTON.

ERROR TO THE CIRCUIT COURT OF THE UNITED STATES FOR THE DISTRICT OF OREGON.

Argued December 6, 1886. — Decided January 10, 1887.

In Oregon there is no sound reason why a married woman, in possession with her husband of property which rightfully belongs to another, may not be jointly sued with him for its recovery.

A constitutional provision that "the property and possessory rights of every married woman . . . shall not be subject to the debts or contracts of the husband" does not control her voluntary disposal of it, and in the absence of other restrictions she may mortgage it to secure the payment of a debt owing from the husband. In this case that question is not open to contention.

A court has control over its judgments during the term at which they are rendered, and may change their form to suit the purposes of justice; and though it would be more orderly in the second to refer to the first, and to explain the changes, it is not essential to do so if a comparison of the two judgments or decrees discloses the changes or modifications made.

This was an action for the possession of a tract of land containing thirteen acres and a quarter of an acre in Multnomah County, Oregon. The plaintiff was a citizen of New York, and the defendants are citizens of Oregon. In the complaint they were alleged to be husband and wife, though they were not sued as such, and no averment founded upon that relationship was made; they were sued simply as parties in occupation of the premises.

Digitized by Google

The complaint alleged that the plaintiff was the owner in fee of the land and lawfully entitled to its possession, describing it; that the defendants were in its possession and wrongfully withheld it from him; and that the property was of the value of $13,000.

The defendant, Colburn Barrell, answered the complaint, setting up that the plaintiff deraigned title through a conveyance from William S. Ladd and wife, citizens of Oregon, bearing date on the 28th day of September, 1882, which was executed collusively, with the sole intent of giving the Federal court jurisdiction of the action, and with the understanding that at some future time the land or its proceeds should be reconveyed to them. The defendant further answered, that he defended only for two acres and three eighths of an acre of the land, and as to that he denied the ownership of the plaintiff or that the plaintiff had any right to the possession thereof, and alleged that he was the owner himself and entitled to its possession; that as to the other part of the tract described in the complaint, consisting of eleven acres, he was merely a tenant of Aurelia J. Barrell. The answer also set up that the plaintiff deraigned title through an instrument purporting to be a conveyance absolute, executed by the defendants to Ladd, bearing date on the 18th of January, 1877, and that such conveyance was intended as a mortgage to secure the payment to him of $3850, with interest, which sum the defendant was ready and willing to pay.

The defendant, Aurelia J. Barrell, demurred to the complaint, on the ground that, as the wife of Colburn Barrell, she was improperly joined with him in the action; and that the complaint did not state facts sufficient to constitute a cause of action, because, she being sued as the wife of her codefendant, there were no allegations in the complaint of a cause of action for which she, as such, was responsible.

The court overruled the demurrer, and Aurelia answered, setting up, as in the answer of Colburn Barrell, the collusive character of the conveyance of Ladd and wife to the plaintiff on the 28th of September, 1882, under which he asserted title to the premises; and further, that she defended merely for

Digitized by Google

eleven acres, as to which she denied the ownership of the plaintiff, or his right of possession, and alleged that she was the owner herself and rightfully entitled to its possession. She also set up, as in Colburn Barrell's answer, the conveyance by the defendants to Ladd, through whom the plaintiff claimed the eleven acres, dated January 18, 1877, and averred that such conveyance was intended as a mortgage on her separate estate as security for the payment of the sum owed by her husband to Ladd, with interest thereon.

To these answers the plaintiff replied, traversing their material averments, except that he admitted that the conveyance of the defendants to Ladd on the 18th of January, 1877, was intended as a mortgage to secure the payment of a debt by Colburn Barrell to him, and stated that in December, 1879, he instituted a suit in the Circuit Court of Oregon for Multnomah County against the defendants, for the purpose of having that conveyance declared to be a mortgage, and for a decree foreclosing the same, and for a sale of the premises; that in that suit the defendants appeared and defended, setting up all the facts contained in their separate answers in this case; that such proceedings were had therein that, on the 19th of March, 1880, a final decree was rendered, declaring the conveyance to be a mortgage, and that its condition had been broken, and decreeing that the property be sold, and that the defendants and all persons claiming under them be barred and foreclosed of all right and interest in it; that under this decree the property was sold by the sheriff of Multnomah County after due advertisement, and in the manner directed, and at such sale William S. Ladd became the purchaser; that the sale was confirmed, and, on the 25th of August, 1880, the sheriff executed a deed of the property to him; that no part of the property had been redeemed, and that no appeal had been taken from the decree, which remained unreversed, and that the plaintiff was the immediate grantee of Ladd.

On the trial of the case, the plaintiff introduced the conveyance executed by the defendants to William S. Ladd, of the property described in the complaint dated the 18th of January, 1877, and a certified transcript of the record of the suit

Digitized by Google

brought by him against them in the state court to have the conveyance adjudged to be a mortgage, and for its foreclosure, and the sale of the premises, showing the decree and order for the sale, and the confirmation of the sale. The plaintiff also introduced the conveyance by the sheriff to William S. Ladd, bearing date on the 25th of August, 1880, and also a deed of the premises by Ladd and wife to the plaintiff on the 28th of September, 1882. No evidence was offered as to the alleged collusive purpose in the execution of this deed, to give the Federal court jurisdiction of the action.

The transcript of the record of the suit showed what purported to be a final decree, entered on the 19th of March, 1880, and subsequently a second decree, also purporting to be a final decree, entered on the 23d of March, 1880. The two decrees differed only in the manner in which the property to be sold was described. The difference arose in this way. At the request of counsel, it was referred to a referee to examine and report upon the propriety of offering the property for sale in parcels, so as to enhance the proceeds therefrom. The referee reported a scheme dividing the property into parcels, and the court directed it to be sold accordingly, upon the condition that, after it had been sold in parcels, if any one should bid more for it as a whole, it should be sold to him. In the first decree the metes and bounds of the seven parcels are given separately. In the second, the metes and bounds of the several parcels are given separately, and of the whole as one tract. The process under which the sale was made was a copy of the last decree. When the transcript was offered in evidence, counsel objected to its admissibility, on the ground that the record showed that the final decree was made and entered on the 19th of March, 1880, and that the court had no jurisdiction to enter the second decree, under which the sale was made. The court overruled the objection, and the defendants excepted. The defendants then offered in evidence a copy of the judgment lien docket of the state Circuit Court, showing that the decree was docketed on the 19th of March, 1880. No other evidence having been produced, the court instructed the jury that the sheriff's deed conveyed the estate of the defendants to

Digitized by Google

the grantee therein, William S. Ladd, and that the conveyance from Ladd and wife to the plaintiff vested the estate in him, and, therefore, that the verdict must be for the plaintiff. To this instruction counsel excepted. The jury accordingly gave a verdict for the plaintiff, upon which judgment was entered; and to review that judgment the defendants brought the case here on a writ of error.

Mr. W. W. Upton for plaintiff in error, (*Mr. W. W. Chapman* was with him on his brief,) cited: *Bibb* v. *Pope*, 43 Ala. 190; *Coleman* v. *Smith*, 55 Ala. 368; *Conrad* v. *Le Blank*, 29 La. Ann. 123; *Foxworth* v. *Magree*, 44 Mississippi, 430; *Baines* v. *Barbridge*, 15 La. Ann. 628; *Theriet* v. *Voorhies*, 12 La. Ann. 852; *In re Boyd*, 4 Sawyer, 262.

Mr. Samuel Shellabarger and *Mr. Jeremiah M. Wilson*, for defendant in error, cited: *White* v. *Crow*, 110 U. S. 183; *Booth* v. *Tiernan*, 109 U. S. 205; *Packet Co.* v. *Clough*, 20 Wall. 528; *Railroad Co.* v. *Smith*, 21 Wall. 255; *Thompson* v. *First National Bank*, 111 U. S. 529; *Jones* v. *Dove*, 7 Oregon, 467; *United States* v. *Basset*, 9 Wall. 38; *Goddard* v. *Ordway*, 101 U. S. 745; *Knapp* v. *King*, 6 Oregon, 243.

Mr. Justice Field, after stating the case as above, delivered the opinion of the court.

Of the numerous points made by the defendants below, the plaintiffs in error here, only three require notice. The others are either immaterial or unsupported by the record. The three are these:

1st. The ruling of the court on the demurrer of Aurelia to the complaint;

2d. The ruling of the court that the decree of the state court was conclusive as to the right of Aurelia to mortgage the property for the debt of her husband; and

3d. The ruling sustaining the validity of the sale under the decree of the state court, entered on the 23d of March, 1880.

1. The objection taken by the demurrer of Aurelia is, that,

Digitized by Google

being the wife of Colburn Barrell, she cannot be joined with him as a codefendant in an action for the possession of real property, of which both are alleged to be in the occupation. It is founded on the theory that, by the common law, her identity is so merged in his that she cannot have possession of such property independently of him. If there be any such rule of the common law, upon which we affirm nothing, it has been abolished in Oregon. By a statute of that state, approved on the 21st of October, 1880, all laws which impose or recognize any civil disabilities of the wife, not imposed or recognized as to the husband, were repealed, except that the right to vote and hold office was not conferred upon her. And "for any unjust usurpation of her property or natural rights," she was declared to have the same right to appeal to the courts of law and equity for redress that the husband has. In that state she can hold property jointly with him, or separately from him. There would seem, therefore, to be no sound reason why, if in possession with him of property which rightfully belongs to another, she may not be jointly sued with him for its recovery. In the present case she claimed the larger part of the land in controversy as her separate property.

2. The second objection, that the decree of the state court in the suit by Ladd against the defendants does not bar the right of Aurelia to the property, is founded upon her supposed inability to mortgage her property to secure a debt of her husband under section five of article XV of the state Constitution, which declares "that the property and possessory rights of every married woman at the time of marriage, or afterwards acquired by gift, devise or inheritance, shall not be subject to the debts or contracts of the husband." But that clause merely preserves the property of the wife from its compulsory subjection to his debts or contracts. It was not designed to control her voluntary disposal of it, and in the absence of other restrictions she could mortgage it to secure the payment of a debt owing by him.

The objection, however, is entirely disposed of by the decree in the state court. The rights of the parties under the conveyance of the defendants to Ladd of January 17, 1877, were

Digitized by Google

fully considered and determined in that case. The conveyance was adjudged to be a mortgage. The rights of the defendants in the property were foreclosed, and the property was ordered to be sold, and was sold, and the sale was confirmed by the court. The conveyance to Ladd as the purchaser at such sale transferred all the estate of the defendants in the property. The question as to her ability to mortgage the property cannot be raised again in this case; it has been finally adjudged against her present contention.

3. The two decrees in the suit in the state court do not conflict in the matters adjudged. The latter decree differs from the first merely in giving the boundaries of the property to be sold as one tract, and also the boundaries of each of the seven parcels into which it was divided. This addition to the original decree could be made by the court during the term in which that decree was rendered. The court could lose jurisdiction over it only by the adjournment of the term with no motion pending respecting it. When the second decree was made, it would, as stated by the learned district judge, have been a better course, "more orderly and convenient," as he expresses it, "to have referred to the first one, and stated in what particular the latter was intended to modify, supplement, or supersede the former." But this was not essential; a comparison of the two decrees discloses the additions made to the first one.

Judgment affirmed.

BALDWIN v. BLACK.

APPEAL FROM THE CIRCUIT COURT OF THE UNITED STATES FOR THE EASTERN DISTRICT OF LOUISIANA.

Argued December 2, 3, 1886. — Decided January 10, 1887.

Where, under the Code of Practice of Louisiana, a steam-tug is sequestered by judicial process, and, under Art. 279, the plaintiff in sequestration gives a bond, with surety, to the sheriff, and takes the tug into his possession, and uses her, and afterwards restores her to the sheriff, he is

Digitized by Google

not liable to the defendant in sequestration for the fruits or revenues of her use.

Being in the lawful possession of the tug, his agent is not liable to the defendant in sequestration, either in contract or tort, in respect to any earnings of the tug, or any compensation for or value of her use.

The claim of the plaintiff in sequestration having been founded on a mortgage on the tug, and it appearing that on a sale of her to him, on a judgment in his favor in the sequestration suit, there was a deficiency in the net proceeds of her sale to pay the mortgage debt and certain lien and privileged debts, having precedence of the mortgage, which the plaintiff in sequestration paid, under subrogations, legal as well as express, to the rights of the creditors holding those debts, between the date of the seizure of the tug and the day of her sale, no cause of action could exist against the plaintiff in sequestration in respect to any earnings received by him from the use of the tug.

This was a suit in Admiralty, *in personam*. The case is stated in the opinion of the court.

Mr. Robert H. Marr for appellant submitted on his printed argument.

Mr. R. H. Browne for appellee. *Mr. H. C. Miller* for same submitted on his printed argument.

Mr. Justice Blatchford delivered the opinion of the court.

This is a suit in Admiralty, *in personam*, brought in the District Court of the United States for the Eastern District of Louisiana, by Joseph C. Keyser against John W. Black. The substance of the libel is, that Keyser was the owner of the steam-tug C. C. Keyser; that, in October, 1877, the firm of Neafie & Levy, holding a mortgage on the tug, brought suit in a state court in Louisiana, against Keyser, and obtained a writ of sequestration therein, and caused the sheriff to seize the tug and hold it, until, on the application of Neafie & Levy, it was released on bond; that thereupon Black took possession of it, though he had no lawful right to do so, and used it in towing for hire, on the Mississippi River, injuring it and deteriorating its value; that the value of the use and services of the tug, as made use of by Black "for his own behoof and benefit," is $25,000; and that Black, by taking possession of

Digitized by Google

and using the tug, is liable to Keyser for that amount, "as in an implied contract." The libel prays for a decree that Black pay it to Keyser.

The answer sets up in defence the facts hereinafter recited as those found by the Circuit Court, and denies that there is any contract or obligation, implied or otherwise, on the part of Black to Keyser.

On a hearing, the District Court pronounced for the libellant, and, on the report of a commissioner, entered a decree that A. S. Baldwin and J. Levy & Co. "subrogated to the rights of the libellant on undivided halves," recover from Black $506.86. Black appealed to the Circuit Court, as also did Baldwin and Levy & Co. The Circuit Court made a finding of facts, of which only the following are material in the view we take of the case:

1. In October, 1877, Neafie & Levy, of Philadelphia, were creditors of Keyser, the libellant, for $18,164, with interest, for which amount they had a mortgage upon the tug, the debt being for the price of the tug built by them for Keyser.

2. On October 11, 1877, they began suit in the Third District Court for the Parish of Orleans to collect that debt. They sequestered the tug in accordance with the law, and in due course recovered judgment against Keyser for the full amount of their debt, with interest, and issued execution against him. The tug was sold, under the execution, to them, the judgment recognizing their mortgage, for $16,075, the amount was credited on their debt, and there remained due to them by Keyser, on the judgment, after giving him credit for all that was made on the execution, $3387, with interest.

3. During the pendency of that suit, the tug not having been bonded by Keyser during the ten days allowed by law to him to bond her, Neafie & Levy afterwards bonded her and she was discharged, under the order of the court, into their possession, under the release bond furnished by them under and in accordance with the 279th and 280th Articles of the Code of Practice. Black, the defendant, was the surety of Neafie & Levy in the release bond, and was their agent to receive and hold possession of the tug, and, under the order of release, did receive and hold possession of her for them.

Digitized by Google

4. The tug was held under the release bond, by Neafie & Levy, through the defendant, as their agent, from October 25th, 1877, to January 10th, 1878, on which date she was returned to the custody of the sheriff. She was held by him under the writ of sequestration in the suit of Neafie & Levy against Keyser, until May 6th, 1878, when she was sold under the execution, issued in that suit, to satisfy the judgment therein.

5. From October 25th, 1877, to December 27th, 1877, the tug was in actual use in the business of towing vessels, by Black, with the authority and under the direction of Neafie & Levy, to whom he accounted for all her earnings; and he acted throughout, in becoming surety, and in receiving, holding, and using the tug, as agent for Neafie & Levy.

6. The net amount of earnings so accounted for, and paid to Neafie & Levy by Black, over expenses and disbursements incident to the employment of the tug, was $2588.88.

7. When the tug was seized by Neafie & Levy under their mortgage, she was encumbered with lien and privileged debts to the amount of $4488.17, all of which, taking precedence of their mortgage, were paid by them under subrogations, legal as well as express, to the rights of the creditors holding those debts, the debts having been created by Keyser, and being his debts, discharged by them, between the date of the seizure of the tug under their sequestration and the day of the sale by the sheriff to them.

On those facts the court found, as conclusions of law:

1. That Black was lawfully in possession of the tug as the agent of Neafie & Levy, who were lawfully in control of her under the order of a court of competent jurisdiction.

2. That there was no liability on the part of Black, *ex contractu* or *ex delicto*, to account to the libellant for the use or earnings of the tug.

A decree was entered dismissing the libel, and, the interest of Levy & Co. having been transferred to Baldwin, the latter has appealed to this court.

The Code of Practice of Louisiana (Art. 269) provides for a mandate of the court called a judicial sequestration, "ordering the sheriff, in certain cases, to take into his possession and to

Digitized by Google

keep a thing of which another person has the possession, until after the decision of a suit, in order that it be delivered to him who shall be adjudged entitled to have the property or possession of that thing." By Art. 271, "all species of property, real or personal," may be sequestered. By Art. 275, a plaintiff in a suit "may obtain a sequestration in all cases where he has a lien or privilege on property." Art. 279 provides for the giving by the defendant of an obligation, with surety, to the sheriff, to set aside the mandate of sequestration, the obligation to be in an amount equal to the value of the property to be left in the possession of the defendant; and also enacts that whenever the defendant shall not execute such obligation within ten days after the seizure of the property by the sheriff, it shall be lawful for the plaintiff "to give similar bond and security to the sheriff as that required by law from the defendant, and to take the property sequestered into his possession."

Articles 280 and 281 are in these words: "Art. 280. The security thus given by the defendant, when the property sequestered consists in movables, shall be responsible that he shall not send away the same out of the jurisdiction of the court; that he shall not make an improper use of them; and that he will faithfully present them, after definite judgment, in case he should be decreed to restore the same to the plaintiff. Art. 281. As regards landed property, this security is given to prevent the defendant, while in possession, from wasting the property, and for the faithful restitution of the fruits that he may have received since the demand, or of their value in the event of his being cast in the suit."

(1.) The proceedings of Neafie & Levy to obtain possession of the tug were strictly in accordance with these provisions of law. They being lawfully in possession and control of the tug, under the order of a court of competent jurisdiction, Black, as their agent, was in lawful possession of her. But he was in possession only as such agent, and no cause of action against him, in favor of Keyser, could arise, either in contract or tort, in respect to any earnings of the tug or any compensation for or value of her use. Whatever claim there could be, could be only against Neafie & Levy.

Digitized by Google

(2.) The statute seems to make a distinction between movables and landed property, by prescribing in regard to the former that no "improper use" shall be made of them by the party bonding them, thus implying that a proper use may be made of them; and by providing in regard to landed property that the value of its fruits is to be restored. And this distinction is recognized by the Supreme Court of Louisiana; for, in *Segasie* v. *Piernas*, 26 La. Ann. 742, which was a suit against the sureties on a release bond given by the defendant in sequestration, where the question arose whether, in a suit on the bond, the sureties were "liable for the fruits and revenues of movable property sequestered and released on bond," the court, after citing Articles 279, 280, and 281, said: "From these provisions of the law we conclude that the surety on such bond is responsible only for the value of movables, when not delivered according to the stipulations of the bond, after judgment in favor of the plaintiff. It is only where the property is land that the law fixes the responsibility for revenues." There is no good reason why this rule should not equally apply where the plaintiff gives what the statute designates as "similar bond and security to the sheriff as that required by law from the defendant," in order to be able "to take the property sequestered into his possession."

(3.) If the suit were to be regarded as one against Neafie & Levy, to be determined on an accounting with them, it clearly appears that nothing is due to the libellant, when the deficiency in the net proceeds of the sale of the tug to pay the mortgage debt and the other lien and privileged debts is taken into account. This results from the provisions of Art. 2207, *et seq.* of the Louisiana Civil Code, in regard to compensation.

Decree affirmed.

Mr. Justice Bradley, dissenting:

I dissent from the judgment in this case. The defendant, Black, is treated in all respects as if he had lawful possession and use of the steam-tug in question; whereas, in my judgment, his possession and use were entirely without law or

Digitized by Google

right. He could have no better right than his principals, Neafie & Levy, and they had no right, pending the suit, but that of holding the tug in their possession as a pledge for the payment of their debt. They had a mortgage upon it, and brought a suit to recover the debt due, and, under Article 275 of the Code of Practice, they sued out a sequestration of the tug. The defendant, Keyser, having failed to give a release bond, Neafie & Levy gave such a bond under the act of 1842, and the tug was delivered by the sheriff into their possession. This did not give them any right to use it. A sequestration is in the nature of a deposit, and is so treated in the old law, as well as in the Civil Codes of France and Louisiana. See Code Nap. Liv. III, Tit. XI, Du Dépôt et du Sequestre; Louis. Code, 1808, Book III, Tit. XI, Of Deposit and Sequestration; Code 1825, Book III, Tit. XIII, ditto; Œuvres de Pothier, Tom. VI, Du Contrat de Dépôt. One of the first rules relating to a deposit is, that the depositary cannot use the thing deposited. Rev. Civ. Code, 1870, Art. 2940. A sequestration, if gratuitous, is subject to all the rules which apply to a deposit. Ib. Art. 2975. It is true that the Code of Practice declares that the judicial sequestration "does not mean *a judicial deposit*, because sequestration may exist together with the right of administration, while mere deposit does not admit it." Art. 270. But this right of administration is no more than the right (as well as the duty) of taking due care of the thing, as a prudent father of a family would do, to prevent it from deterioration. Some things would deteriorate without use. A railroad or a plantation would go to destruction. But these cases, and some others, are exceptional. As a general thing, movables are different. Without the owner's consent they cannot lawfully be used for lucrative purposes by the person who has the mere custody of them. When the plaintiff obtains possession, they become in his hands a pledge for the payment of his debt. His lien or mortgage is converted into a pledge; and a pledge does not give the pledgee the right to use the thing pledged. The exceptions are stated by Lord Holt in *Coggs* v. *Bernard*, 2 Ld. Raym. 909, 916, 917, and summarized in Addison on Contracts, 3d Am. Ed., N. Y. 1876, § 1090, where

Digitized by Google

it is said: "If the pawn be something that will be the worse for wear, as clothes, the pawnee cannot use it; but if it will not be the worse for wear, as jewels, the pawnee may use them; but then it must be at his peril; for, if he is robbed in wearing them, he is answerable. Also, if the pawn be of such a nature that the keeping is a charge to the pawnee, as if it be a cow or horse, the pawnee may milk the cow, or ride the horse; and this is in recompense of the keeping." The rule is derived from the civil law. The Institute says: "Theft is committed not only when one man removes the property of another to appropriate it to himself, but also generally, where one man uses the property of another against the will of the proprietor; thus, if a creditor uses a pledge, or a depositary the deposit left with him, &c." Lib. IV, Tit. I, § VI. Mackeldey says of the pledgee: "He is liable for every wrong (*culpa*); he dare not use the pledge without special permission, otherwise he is liable for casual damages resulting to it." Roman Law, Book II, Title First, II, 4, § 441, Am. Ed. 1883, (translated from 14th German Ed.).

The right of administration referred to in Art. 270 of the Code of Practice is vested in the sheriff who takes possession under the mandate of sequestration; but he cannot use sequestered movables except to prevent their deterioration. See *Witkouski* v. *Witkouski*, 16 La. Ann. 232; *Owens* v. *Davis*, 15 La. Ann. 22, 25; *Parish* v. *Hozey*, 17 La. 578; *Avart* v. *King*, 14 La. 62. And if he deliver them to the plaintiff, upon receiving the bond prescribed by the act of 1842, the latter obtains no greater right. If the defendant bonds them, as he may do, he may use them, because they are his own property; but even he can make no improper use of them, so as to destroy their value to answer the judgment that may be rendered against him. Article 280 expressly provides that "the security thus given by the defendant, when the property consists in movables, [or in slaves,] shall be responsible that he shall not send away the same out of the jurisdiction of the court; that he shall not make an improper use of them; and that he will faithfully present them after definitive judgment, in case he should be decreed to restore the same to the plaintiff." This

Digitized by Google

is entirely different from what is said in regard to the plaintiff when he bonds the goods. The only right given him is "to take the property sequestered into his possession." Code Pr. 279; Laws Louisiana, 1842, 204. Possession is all that the plaintiff acquires pending suit. And the reason is very apparent: the movables do not belong to him; he only holds them as a pledge, and the property in them remains in the defendant until they are sold under execution upon the judgment.

There can be no question that a steam-tug is such a movable as may be safely kept without use, or that a pledge of it confers no right of use without a special agreement with the owner.

If this is a correct view of the law, neither Neafie & Levy, nor their agent or lessee, Black, acquired any right to use the steam-tug, but were guilty of tort in using it without Keyser's consent. They became liable to him not only for all benefit and advantage they derived from its use, but for all deterioration and wear and tear occurring by such use. They are to be treated as tort-feasors, and not as lessees under Keyser.

Now, it appears from the findings that Black realized over $14,000 from the use of the tug, either from her actual earnings in towing, or by virtue of the position she occupied, in his name, in the squadron of the Towing Association; whilst his actual expenses, including insurance, coal, commissions, and everything he could count up, amounted only to $4429. Yet Keyser received credit from these disinterested users of his property for only $2600. It seems to me that this one-sided settlement, made by the tort-feasors themselves, ought not to receive the sanction of a court of justice. The plaintiff sues as upon an implied contract, it is true; but that does not prevent his recovering all that, in equity and justice, he ought to recover. I think that the judgment should be reversed, and a new trial directed.

Digitized by Google

IVES *v.* SARGENT.

APPEAL FROM THE CIRCUIT COURT OF THE UNITED STATES FOR THE DISTRICT OF CONNECTICUT.

Argued December 15, 1886. — Decided January 10, 1887.

It is the duty of a patentee, receiving letters-patent for an invention, to examine them within a reasonable time to ascertain whether they fully cover his invention; and if he neglects so to do for the period of three years, and the real invention is then found to be infringed by a construction which is manufactured and sold without infringing the patent as originally granted, he must suffer the penalty of his own laches, and cannot, by means of a reissue, correct the error.

Wollensak v. *Reiher*, 115 U. S. 96, and *Mahn* v. *Harwood*, 112 U. S. 354, affirmed and applied.

The reissue No. 9901, dated October 18, 1881, of letters-patent No. 202,158, dated April 9, 1878, and granted to Frank Davis for an improvement in door-bolts is void, as containing new matter introduced into the specification, and as being for a different invention from that described in the original patent.

This was a bill in equity to restrain the infringement of letters-patent. The case is stated in the opinion of the court.

Mr. H. T. Blake for appellant.

Mr. John S. Beach for appellee.

Mr. Justice Matthews delivered the opinion of the court.

This is a bill in equity filed by the appellant to restrain the alleged infringement of the complainant's rights, as the assignee of Frank Davis, of reissued letters-patent No. 9901, for an improvement in door-bolts. The original patent was No. 202,158, dated April 9, 1878. The application for the reissue was filed April 1, 1881, the reissued letters-patent being dated October 18, 1881. The alleged infringement is of the third and fourth claims. As the case turns wholly upon the validity of the reissued patent, it is important, for purposes of comparison, to set out the original and the reissue in parallel

Digitized by Google

columns. So much of the original as is excluded from the reissue is marked in brackets, and the additions made by the reissue are in italics. They are as follows:

Original.	*Reissue.*
"Specification forming part of letters-patent No. 202,158, dated April 9, 1878. Application filed January 29, 1878.	"Specification forming part of reissued letters-patent No. 9901, dated October 18, 1881. Original No. 202,158, dated April 9, 1878. Application for reissue filed April 1, 1881.
To all whom it may concern:	*To all whom it may concern:*
Be it known that I, FRANK DAVIS, of North Adams, in the county of Berkshire and state of Massachusetts, have invented certain new and useful improvements in door-bolts; [and I do hereby declare that] the following is a [full, clear, and exact] description [of my invention, which will enable others skilled in the art to which it appertains to make and use the same, reference being had to the accompanying drawings, and to letters of reference marked thereon, which form a part of this specification.]	Be it known that I, FRANK DAVIS, of North Adams, in the county of Berkshire and state of Massachusetts, have invented certain new and useful improvements in door-bolts, *of which* the following is a description.
[This invention is an improvement] on letters-patent [No. 190,561,] granted to [the undersigned] May 8, 1877.	*The improvements are* on *the door-bolt, for which* letters-patent *were* granted to *me* May 8, 1877.
The [nature of said] invention consists [chiefly] in combining a cylindrical outer cas-	The invention consists in combining a cylindrical outer case with an inner *case*, con-

Digitized by Google

ing with an inner [casing,] constructed and recessed as hereinafter described, said [casings] combining to inclose the operating mechanism, and to form a fulcrum and guide therefor; [and] in combining, with said [casings,] a bolt, pitman, and [hub, so constructed and arranged as to operate in the same without pivot-pins or any additional devices, all as] hereinafter more fully [described] and claimed.

In the accompanying drawings Fig. 1 [represents the device as a whole] in perspective. Fig. 2 [represents] a perspective view of the inner [casing and contents.] Fig. 3 is a [detail] view of the bolt [and its attachments.] Fig. 4 is a detail view of the inner [casing.] Fig. 5 is a detail view of the outer casing.

[A designates a cylindrical metalic outer casing or sleeve, which is provided with opposite openings *a a* near its rear end, and with a hole a^1, for attachment by means of screw a^2 to inner casing B.

It is obvious that any known equivalent fastening may be

structed and recessed as hereinafter described, said *cases* combining to inclose the operating mechanism, and to form a fulcrum and guide therefor; in combining with said *cases* a bolt, pitman, and *crank; and in a pitman or connecting rod performing the functions of both pitman and spring, as the above are* hereinafter more fully *set forth* and claimed.

In the accompanying drawings Fig. 1 *shows the bolt* in perspective. Fig. 2 *is* a perspective view of the inner *case and portions of some of the working parts.* Fig. 3 is a view of the bolt, *spring and crank.* Fig. 4 is a detail view of the inner *case, and* Fig. 5 is a detail view of the outer case.

To enable others to make and use my improvements in door-bolts, I will describe them in detail.

A, Figs. 1 *and* 5, *is a cylindrical metallic outer case, having the holes* a a *near its rear end, and hole* a^1, *through which a screw* a^2, *Fig.* 1, *passes into the inner case B, to hold the two cases together. The inner cylindrical case, B, Figs.* 2 *and* 4, *is made to fit closely into*

Digitized by Google

substituted for said screw. Said casing A is preferably a mere shell of steel, but both the material and thickness can be considerably varied without departing from my invention.

the outer case, and has on its front end a disk in which is the central opening, b. *On its front end the flange* b^1 *is formed, against which the outer case comes. A slot,* b^2, *Fig.* 4, *extends from the disk*

Fig. 1.

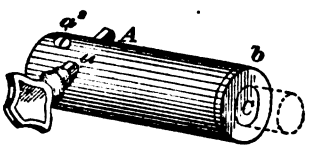

Fig. 2.

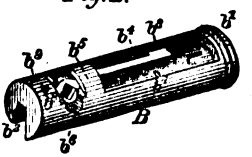

Fig. 3.

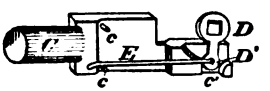

Fig. 4.

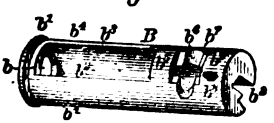

Fig. 5.

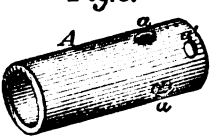

Inner casing B is of brass, cast-iron, or other cheap metal, and has such diameter as allows it to pass readily into said outer casing or sleeve, and to be conveniently withdrawn therefrom. It is provided at the front end with a disk, which has a central opening, *b*, for the passage of the bolt, and an annular flange, b^1 which

on the front end the whole length of, the case. Another slot, b^3, *opposite the slot* b^2, *extends backward from the end disk, as shown in Fig.* 4. *These slots leave the parts* b^4 b^4 *of the inner case,* as *shown in Fig.* 4. *A groove,* b^6, *extends across the case between the parts* b^5 *and* b^8 *of the case. A longitudinal slot,* b^7, *bisects this*

Digitized by Google

prevents it from being forced back too far within said exterior casing. The bottom of said inner casing B has a broad longitudinal slot, b^2, extending from end to end, and communicating with a similar longitudinal slot, b^3, in the top of said casing B, which extends about two-thirds of the length of said casing, beginning just behind said front disk. The interior of the forward part of said inner casing is thus entirely removed, leaving vertical walls b^4 b^4 on each side of the space thus produced. This space is separated by a transverse partition, b^5, from a transverse groove, b^6, in the bottom of which is a longitudinal slot, b^7. A transverse partition, b^8, at the rear of said groove and slot, forms part of the rear end of casing B, and has in its top screw-threaded hole or socket $b,^9$ for the reception of fastening screw a^2.

C designates the door-bolt, having guide-pins *c* on its side, and near its rear end a recess, *c'*, in which works the lower end of crank-arm D', formed in one piece with flat hub D. Said lower end of crank-arm D' is connected by pitman E to the front part of said bolt. Said hub D, when in position *groove and is cut through the case.*

C, Fig. 3, *is the bolt, made with the lugs* c c, *only one of which is used. The projecting end is round, the part within the case is rectangular, one of the narrower sides fitting into the slot* b^2, *and the other into* b^3. *Its rear end is made narrower and thinner to make room for the crank, as shown in Fig.* 3.

The crank D is made in the usual form, and is arranged in a position to bring the hole through its larger end in line with the groove b^6 *on the inner case and with the openings* a a *in the outer case.*

The pitman and spring E, Fig. 3, *is a straight hard-drawn wire, and is connected to the bolt and crank by suitable pivotal connections. As shown in the drawings, its ends are bent at right angles to its length and pass into holes in the bolt and crank, the spring being made long enough for the purpose. The lug* c *on the bolt is so arranged relative to the connections of the spring as to give it the required degree of tension or "set up," it is called. The tension bends the spring over the lug* c, *as shown in Fig.* 3. *The key has its shank square*

Digitized by Google

for use, extends up through said slot b^7, so that its square or similarly shaped central hole is in a line with transverse groove b^6 of inner casing B, and opposite holes *a a* of outer casing A. The prismatic shank of the key is passed through said holes and groove, and operated as usual to shoot or draw the bolt.

I do not confine myself to the exact details of construction shown, as these may be somewhat modified in various ways without departing from the spirit of my invention.

The working parts of my mechanism are more firmly secured and more perfectly protected than in my former patent, as hereinbefore recited. I also deem the shape of my new hub and crank preferable for practical working.]

Having [thus] described my [invention], what I claim as new, and desire to protect by letters-patent, is —

1. The combination, with a door-bolt and operating mechanism, of a cylindrical exterior [casing,] and a recessed inner [casing,] said [casings] combining to inclose the operating mechanism, and to form a ful-

to fit the hole in the crank, with a round part near the handle to turn in the case, as shown in Fig. 1.

Having described my *improved bolt and its mode of operation*, what I claim as new, and desire to secure by letters-patent, is —

1. The combination, with a door-bolt and operating mechanism, of a cylindrical exterior *case* and a recessed inner *case*, said *cases* combining to inclose the operating mechanism, and to form a fulcrum and guide

Digitized by Google

crum and guide therefor, substantially as set forth.

2. The combination of [casing] A, having opposite holes *a a*, with inner [casing] B, having transverse groove b^6 and slot b^7, [flat hub] D, [having crank-arm D',] and the bolt and pitman, substantially as set forth.

3. [The combination of cylindrical outer casing A with inner casing B, having annular front flange b^1, side walls b^4 b^4, transverse partitions b^5 and b^8, transverse groove b^6, and slot b^7, said casings being securely fastened together and adapted to receive the bolt and working mechanism, substantially as set forth.]"

therefor, substantially as set forth.

2. The combination of *case* A, having opposite holes *a a*, with inner *case* B, having transverse groove b^6 and slot b^7, *crank* D, and the bolt and pitman, substantially as set forth.

3. *The combination of the bolt C, provided with the lug* c, *pitman E, operating as a pitman and spring, and crank D to hold the bolt, substantially as set forth.*

4. *In a cylindrical door-bolt, the pitman E, arranged and adapted to operate as a pitman and spring, substantially as set forth.*"

It will be observed that the first and second claims of the reissued patent are substantially the same as the first and second claims of the original patent, but as there is no allegation or proof of any infringement by the appellee of either of these they may both be dismissed from further consideration. The third claim of the original patent is omitted from the reissue, its place being taken by the third and fourth claims of the latter. The whole question is, whether the patentee and his assignee are entitled, under the circumstances of the case, to claim the pitman E, operating as a pitman and spring in a door-bolt, as a distinct and separate invention, irrespective of its combination with the exterior and interior cases mentioned in the first and second claims. This right is affirmed by the appellant and denied by the appellee.

The invalidity of the reissued patent is maintained by the appellee on two grounds: 1st, that the reissue embraces a dif-

Digitized by Google

ferent invention in the third and fourth claims from any described or contained in the original specification; and, 2d, that, if it were otherwise, the patentee and assignee had, at the time of the application for a reissue, lost their rights to correct the defects in the original by their own laches. It was upon the latter of these grounds that the Circuit Court proceeded in dismissing the bill. The undisputed facts on this part of the case are stated by the Circuit Court in its opinion, and are as follows:

"The inventor, a carpenter by trade and not an educated man, invented the device in November, 1877, and applied, in January, 1878, to Mr. Terry, a patent solicitor in New Haven, to procure him a patent, specifying, as the invention to be patented, the pitman, which, in connection with the crank, held the bolt and answered the double purpose of pitman and spring. Terry, being in ill health, and, therefore, not then doing business, sent the case to his agent in Washington, with Davis's instructions. In due time the papers were returned to Terry and were signed by Davis, who read them and supposed that the application 'covered the spring, which he intended to be patented.' Terry did not read the application. The patent was received by Davis in April, 1878. It does not appear whether it was then examined or not. The plaintiff did not see the patent until after it was assigned to him, on May 28, 1879. Whether he then read it or not he does not know; but in the latter part of 1880, after the defendant had begun to infringe, he did read it, and supposed, from the drawings, that the pitman-spring, as a separate invention, was secured by the patent, until he was undeceived by Mr. Terry. In the spring of 1878 the plaintiff received from Davis a license to use the pitman-spring upon another than the patented bolt. In September, 1880, Sargent & Co. commenced work upon the patterns for the infringing bolt, and made the first bolts December 1, 1880." *Ives* v. *Sargent*, 21 Blatchford, 417.

The application for the reissue was not made until after the lapse of nearly three years from the date of the original patent; that is, from April 9, 1878, until April 1, 1881. It may be assumed, as the effect of the evidence, that Davis, in

Digitized by Google

describing to his solicitor, Terry, the invention which he wished to have patented, specifically designated and described the pitman-spring as his substantial invention, distinct from the combination of which it formed a part in the first and second claims of the patent. In his testimony on this point, in answer to the question, "What did you describe to him as the invention which you wished to have patented?" Davis states, "I explained to Mr. Terry that I had got the spring, answering for a spring, and also for turning the bolt, a pitman-spring. I didn't know the term at that time;" and also that he wished to have patented "this pitman-spring, and this guard, lever, and that purchase it had in holding the bolt out or back; also, in moving the bolt out and back." Terry, also, on the same point, says, that Davis "brought the invention or bolt to me and stated that he wanted to get it patented. He also stated what his invention was, as he considered it, that he wanted patented, and the thing that he wanted patented particularly was the pitman or connecting-rod, which answered the double purpose of pitman and spring, and in connection with the crank held the bolt when it was shoved out of the case and when it was drawn within the case." Terry also states that he sent "a letter of instructions with the model, setting forth Mr. Davis' wishes as he had expressed them to me." The specification, as prepared by the solicitor in Washington, was returned to Terry and by him exhibited to Davis, who signed the application, as he states, after he had examined it and supposed it to be right, "covering the spring which I intended to be patented." Mr. Terry states that he does not recollect whether he himself read over the specification and examined the claims at the time Mr. Davis signed the papers, or not. On this application the patent was issued, and it does not appear to have been read or examined by any of the parties in interest until after the appellee commenced making the bolts now alleged to be an infringement. It was then discovered for the first time that the original patent did not cover the claim as now made, and the reissue was obtained to effect that purpose.

It is admitted in argument by the counsel for the appellant

Digitized by Google

that there was negligence; it is contended, however, that it was not the negligence which in law is imputable to the patentee or the appellant, but the negligence of the solicitor employed by the patentee to obtain the patent. Counsel say, "it was the Washington solicitor's disobedience to instructions which caused the mistake, and Terry's neglect to revise the application before sending for Davis to sign it, which prevented its discovery."

The rule of diligence required in such cases, as the result of previous decisions of this court, is stated in *Wollensak* v. *Reiher*, 115 U. S. 96, 99, in these words: "It follows from this, that if, at the date of the issue of the original patent, the patentee had been conscious of the nature and extent of his invention, an inspection of the patent, when issued, and an examination of its terms, made with that reasonable degree of care which is habitual to and expected of men, in the management of their own interests, in the ordinary affairs of life, would have immediately informed him that the patent had failed fully to cover the area of his invention. And this must be deemed to be notice to him of the fact, for the law imputes knowledge when opportunity and interest, combined with reasonable care, would necessarily impart it. Not to improve such opportunity, under the stimulus of self-interest, with reasonable diligence, constitutes laches, which in equity disables the party who seeks to revive the right which he has allowed to lie unclaimed from enforcing it to the detriment of those who have in consequence been allowed to act as though it were abandoned."

In *Mahn* v. *Harwood*, 112 U. S. 354, 362, it was stated, that, "If a patentee has not claimed as much as he is entitled to claim, he is bound to discover the fact in a reasonable time or he loses all right to a reissue; and if the Commissioner of Patents, after the lapse of such reasonable time, undertakes to grant a reissue for the purpose of correcting the supposed mistake, he exceeds his power, and acts under a mistaken view of the law; the court, seeing this, has a right, and it is its duty, to declare the reissue *pro tanto* void in any suit founded upon it."

Digitized by Google

It is also settled that, while no invariable rule can be laid down as to what is a reasonable time within which the patentee should seek for the correction of a claim which he considers too narrow, a delay of two years, by analogy to the law of public use before an application for a patent, should be construed equally favorable to the public, and that excuse for any longer delay than that should be made manifest by the special circumstances of the case. *Wollensak* v. *Reiher*, 115 U. S. 96, 100; *Mahn* v. *Harwood*, 112 U. S. 354, 363.

In the present case no special circumstances in excuse for the delay are alleged. The excuse proffered is simply an attempt to shift the responsibility of the mistake, as originally made, from the patentee to his solicitor; but no excuse is offered why the patentee did not discover the negligence and error of his solicitor in due time. On the contrary, he assumed, without examination, that the specification and claims of his patent were just what he had desired and intended they should be, and rested quietly in ignorance of the error and of his rights for nearly three years, and then did not discover them until after others had discovered that he had lost the right to repair his error by his neglect to assert it within a reasonable time.

We are, therefore, of opinion that the Circuit Court was clearly in the right in deciding the reissue void as to the third and fourth claims, on the ground that the right to apply for it had been lost by the laches of the patentee and his assignee.

We are also of opinion, however, that the reissue is void on the other ground, viz., that it contains new matter introduced into the specification, and that it is not for the same invention as that described in the original patent. In support of the reissued patent, on this ground, it is contended, on the part of the appellant, that the invention of the pitman-spring device is shown in the drawings, which are the same both in the original and the reissued patents. All that can be said in respect to the drawings is, that they show the pitman-spring device as a part of the bolt intended to be covered by the patent, and described as a combination of which that device forms a part. There is nothing whatever in the drawings to

Digitized by Google

show that the patentee claimed to be the inventor of that part separate from the combination, as a distinct novelty, useful by itself, or in any other combination; neither is it so described in the specification. The operating mechanism of the bolt, as distinct from the casings, which are described as forming a fulcrum and guide to it, is described as "a bolt, pitman, and hub so constructed and arranged as to operate in the same (said casings) without pivot pins or any additional devices." It is argued, on this language, that the only additional device usual in such cases is a spring, and that, therefore, the meaning of the specification is that no separate spring was required, and from that the inference is to be made that the pitman should operate both as a pitman and a spring; but this inference is entirely too obscure and remote. It is not obvious that the additional device referred to was a spring, and there is nothing in the language to suggest, what is clearly and fully expressed in the amended specification, that "the pitman and spring E, Fig. 3, is a straight hard-drawn wire, and is connected to the bolt and crank by suitable pivotal connections." So that in the original description there is nothing to show of what material the pitman is made so as to operate as a spring, and there is no assertion in it of its performing the double function of pitman and spring.

In this view, therefore, the case comes within the rule as stated in *Coon* v. *Wilson*, 113 U. S. 268, 277. There, as here, the lapse of time and laches based upon it were considered immaterial, because the reissued patent was for a different invention from that described in the original. "The description had to be changed in the reissue, to warrant the new claims in the reissue. The description in the reissue is not a more clear and satisfactory statement of what is described in the original patent, but is a description of a different thing."

We are, therefore, constrained to the conclusion that the addition of the third and fourth claims, with the corresponding alterations in the specification, is such an expansion of the invention as originally described as to destroy its identity, and to that extent to avoid the reissued patent.

For these reasons, the decree of the Circuit Court is affirmed.

Digitized by Google

HARTSHORN *v.* SAGINAW BARREL COMPANY.

APPEAL FROM THE CIRCUIT COURT OF THE UNITED STATES FOR THE EASTERN DISTRICT OF MICHIGAN.

Argued November 30, 1886. — Decided January 10, 1887.

When two persons invent the same invention at about the same time, and employ the same solicitor, who in good faith assigns the priority of invention to the wrong person, and makes claims, and takes out patents for each on that theory, limiting the claim of the real inventor to a narrower claim, not within the claim of the other inventor, and both acquiesce in this decision for a period of nine or ten years, the acquiescence of the real inventor must be regarded, so far as his claims are concerned, as an abandonment of any right on his part to a patent for the broad and real invention; and so far as the patentee of it is concerned, the validity of his patent fails, because he was not the inventor, and was not entitled to the patent.

The shade roller manufactured by the appellee, does not infringe patent No. 69,189, granted to Jacob David, September 24, 1867, and assigned to the appellants.

This was a bill in equity to enjoin alleged infringements of letters-patent. The bill was dismissed, and the complainant appealed. The case is stated in the opinion of the court.

Mr. James T. Law for appellant. *Mr. S. D. Law* was with him on the brief.

Mr. Charles J. Hunt for appellee.

Mr. Justice Matthews delivered the opinion of the court.

This is an appeal from a decree of the Circuit Court dismissing the complainant's bill, which was a bill in equity for the purpose of enjoining the alleged infringement of three several letters-patent for improvements in shade rollers, designated as follows: 1st. Reissued patent No. 7370, dated October 31, 1876, granted to the complainant, called the Hartshorn reissue. 2d. Reissued patent No. 7367, dated October 31, 1876, granted to the complainant as assignee of William Campbell, called the Campbell reissue. 3d. Patent No. 69,189, dated

Digitized by Google

September 24, 1867, granted to Jacob David, and assigned to the complainant, called the David patent.

The questions in the case involve the validity of the reissued patents and the alleged infringement of the David patent. The Hartshorn reissue was the reissue of original letters-patent No. 68,502, dated September 3, 1867. The Campbell reissue was the reissue of original letters-patent No. 69,176, dated September 24, 1867. In each case there was, therefore, a delay of about nine years in obtaining the reissue.

In order to understand and resolve the questions arising in the case it will be necessary to consider the state of the art at the time of the issue of the patents. This may be briefly stated as follows: The inventions in question are in that class of shade rollers which are rolled up by the unwinding of a coiled spring; the roller was hollow and the spring placed within it, one end being attached to the roller and the other end to the shaft or rod on which the roller revolved. Sometimes this rod passed entirely through the roller, and sometimes only partially through. As the curtain was drawn down the spring was wound up, and when the tension upon the curtain was released and the curtain allowed to roll up, the spring was unwound, thereby producing the desired result. The upward movement of the curtain was controlled by a pawl and ratchet at one end of the roller, the pawl or the ratchet being attached to the bracket. The pawl might be operated by a cord hung at the side of the window; by pulling down on this cord the pawl was disengaged from the ratchet and the curtain immediately rolled up under the action of the spring. Hartshorn, the appellant, obtained a patent, not in controversy in this suit, but to be considered in reference to the state of the art, dated October 11, 1864. The invention described in that patent consisted in the application of a pawl and ratchet or notched hub arranged in such a manner that the shade may be stopped and retained at any desired height or point within the scope of its movement by a single manipulation of the shade, the usual cord for operating or turning the shade roller being dispensed with entirely, as well as counterpoises, which had in some instances been employed, in connection with spring

Digitized by Google

rollers, for holding the shade at the desired point. He made a ratchet with two notches, one on each side in the periphery of the ratchet wheel, and constructed a pawl to engage with such notches. The pawl was on the bracket, and the ratchet was on the roller. When the curtain was drawn down the spring in the roller was wound up, and when the curtain was released, while the pawl rested on the perimeter of the ratchet-wheel, the curtain would roll up, and continue so to do as long as the velocity of the curtain was sufficient to carry the notches in the ratchet past the pawl before it could fall into them.

Such was the condition of the art when Campbell obtained his original patent dated September 24, 1867. He described his invention as having "for its object to furnish an improved device, by means of which the spring roller of a window-shade may be made to hold the shade stationary at any desired elevation, and yet allow the same to be drawn down or run up, without obstruction or stoppage, as far as may be desired; and it consists in the combination of the loose or sliding pins or bolts, having heads formed upon them, with the flattened shaft of the roller, as hereinafter more fully described." The description, as contained in the specifications, is as follows, having reference to the annexed drawings: "A is the window-shade. B is the hollow roller, one end of which is pivoted to the bracket C, and the other end of which revolves upon the shaft D, that carries the coiled spring, and the projecting end of which is secured in the jaws of the bracket E, so that, by drawing down the shade A, and thus revolving the roller B, the coiled spring may be wound closer around the shaft D. In the block, or part of the roller B that closes or forms the end of the said hollow roller B, and forms its bearing upon the shaft D, are formed two holes leading, upon opposite sides, from its outer or convex surface to a little at one side of its centre, as shown in Fig. 2. The outer ends of these holes are countersunk, as shown. The two opposite sides of the shaft D within the block or part b' are flattened or notched, as shown in Fig. 2. F are two pins or bolts, the bodies of which fit into the holes in the block b', and their heads fit into the countersunk parts of said holes. The bolts or pins F are of such a

Digitized by Google

Opinion of the Court.

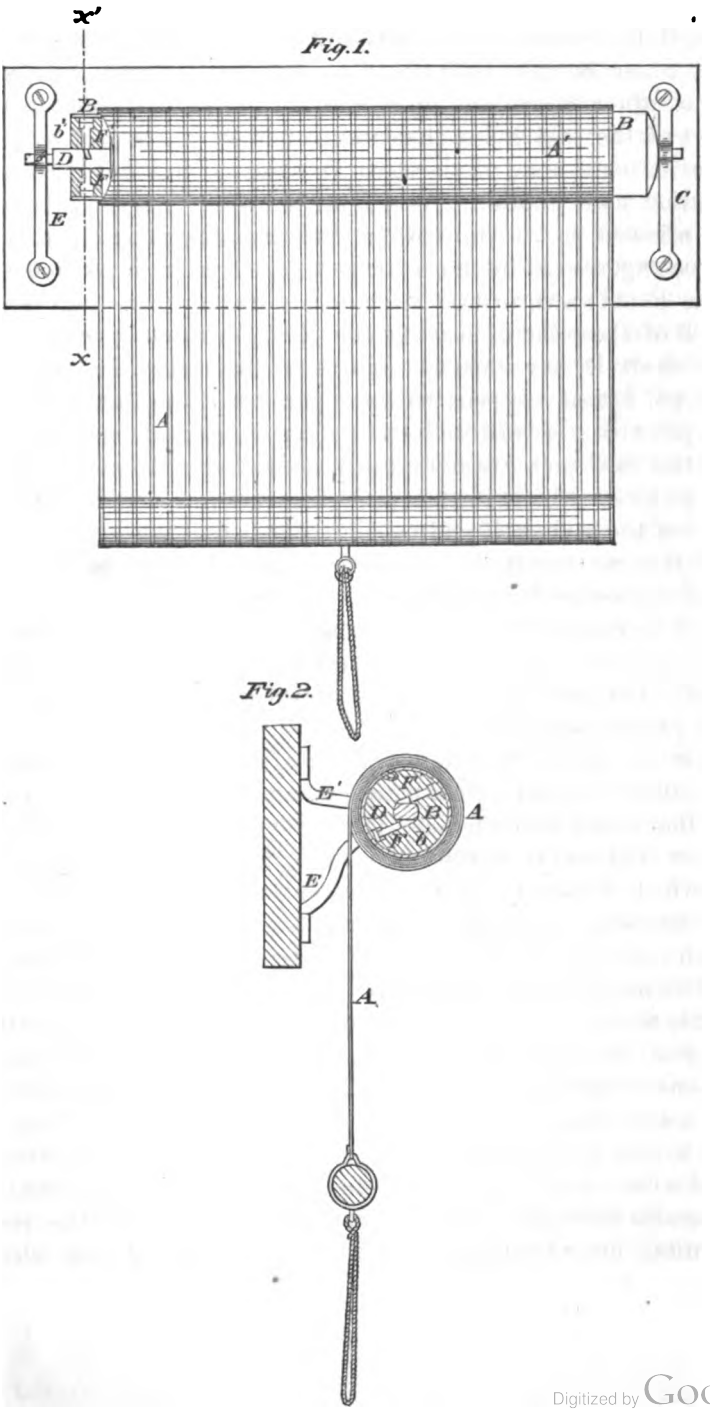

Digitized by Google

length that when their heads rest against the case or shell of the roller B, their points may be free from the shaft D, and when their heads rest upon the bottom of the countersunk part of the said holes, their inner ends or points may overlap the flattened sides of the shaft D, so as to bind said shaft and prevent its revolution. Whenever the shaft D is drawn down or allowed to run up with a little rapidity, the centrifugal force engendered by the revolution of the roller B projects the pins F outward, so that their heads rest against the case or shell of the roller B, leaving the block *b'* free to revolve upon the shaft D, but when the motion of the roller B is checked, the pin F that happens to be uppermost drops down, so that its point or forward end rests upon the shaft D, and as soon as the said point reaches the flattened side of said shaft it drops down a little further, so as to overlap the said flattened side of the said shaft and hold it securely in place.

"Having thus described my invention, I claim as new and desire to secure by letters-patent —

"The combination of the loose or sliding pins or bolts F, having heads formed upon them, with the flattened or notched shaft D, substantially as herein shown and described, and for the purpose set forth."

On the 3d of September, 1867, Hartshorn, the appellant, also obtained his original patent for an improved shade fixture. In that specification he describes his invention as relating "to a new and useful improvement in that class of shade fixtures in which the shade roller is provided with a spiral spring for automatically winding up the shade. The present invention is an improvement on a shade fixture of this class, for which letters-patent were granted to me, bearing date October 11, 1864, and is designed to obviate an objection attending the original device, which consists in the unwinding of the spring whenever the shade roller is removed from its brackets or bearings, a contingency which involves the necessity of winding up the spring previous to the replacing of the roller in its bearings, and which cannot be done by an unskilled person without considerable difficulty." He then proceeds to describe in the specification, by reference to the illustrations, the device which

Digitized by Google

embodies this invention, and adds as follows: "The difference, however, between the within described arrangement and that of the original invention is essential. In the original plan, the spring unwinds immediately as soon as the roller is removed from its bracket or bearings, as the pawl, instead of being attached to the roller or any part connected therewith, is attached to the bracket, the notched hub being attached to the journal of the roller, and when the notched hub is removed from the pawl the spring immediately unwinds. In my present improvement the pawl and notched hub, being both connected with the roller, the spring is retained or prevented from unwinding equally as well when the roller is removed from its brackets or bearings as when adjusted in them." His claim is as follows: "The attaching of a pawl and a ratchet or notched hub to a window-shade roller, provided with a spring or to parts connected with said roller, in such a manner that the tension of the spring will, without any manipulation or adjustment of parts whatever, always be preserved, whether the roller be fitted in the brackets or bearings or removed therefrom substantially as set forth."

The principle embodied in the Hartshorn patent of 1864 was that of an automatic pawl and ratchet, or a pawl so constructed and arranged, with respect to the ratchet, that the pawl would be caused to engage with the ratchet to stop and hold the shade at any desired height or point, or would be prevented from engaging with the ratchet by merely varying the speed of the revolution of the roller, which was effected through the simple manipulation of the shade alone by the hand of the operator, the pawl engaging with the ratchet when the roller was revolved slowly, and not engaging when the roller was made to revolve quickly. He thus dispensed entirely with cords for operating the roller, and with counterpoises, and with the old spring pawl and ratchet which required the use of both hands in manipulating the roller and controlling the shade in its ascent under the force of the spring, as by its use the shade could be raised or lowered by the manipulation of the shade alone in the hands of the operator. In what was previously known as the coach fixture, it

Digitized by Google

was necessary, while one hand of the operator lifted the pawl from the ratchet by means of the cord, to hold the shade with the other hand, or else the shade would quickly fly up for its whole extent. The particular construction or arrangement of pawl and ratchet described by Hartshorn, in his patent of 1864, as his invention, consisted of a ratchet or notched hub on the end of the roller and revolving with it, and a pawl placed upon the bracket or stationary part of the fixture and dropping into the ratchet or notched hub by gravity. The pawl being mounted on a different part of the fixture from that on which the ratchet was mounted, the latter being on the revolving roller and the former on the stationary part of the bracket, it was the necessary result, from such a construction, that, when the roller, as a whole, was removed out of its bearings, there would be a disconnection and disengagement of the pawl and ratchet, and the spring would uncoil or run down, necessitating the winding up of the spring before the roller was again replaced in its bearings, which was a difficult thing to be done, particularly by those having the fixture in use. It was also inherent in the arrangement of the pawl and ratchet used in this roller — the pawl being stationary and resting on the upper side of the revolving notched hub or ratchet as the roller and its notched hub or ratchet revolved under the stationary pawl — that there would be more or less noise in its operation, caused by the notched hub striking against and throwing up the pawl.

It will, therefore, be perceived that the Hartshorn patent of September 3, 1867, and the Campbell patent of September 24, 1867, are for improvements upon the invention described in the Hartshorn patent of 1864, and in any comparison between the two former the invention embodied in the original Hartshorn patent of 1864 must be eliminated as common to both. The circumstances relied upon to justify and make valid the reissues in 1876 of the Hartshorn patent of 1867, and the Campbell patent of the same year, are conceded to be as follows: In 1873 a suit was brought in the district of Massachusetts upon the David patent by the *Salem Shade Roller Company*, then the owner of it, against one *William G. Harris*,

Digitized by Google

who was selling rollers made by Hartshorn, the present appellant, who assumed the defence of that suit. The rollers sold by Harris had the pawl arranged so as to move towards and away from the axis of the roller, as described and claimed in the David patent, but this pawl was different in form from that shown in the David patent, and engaged with the spindle instead of with the bracket. The transcript of the record in that suit is in evidence in this, and shows that it was made to appear, in the effort to fix the dates of the inventions described in the three patents of David, of Campbell, and of Hartshorn, that Campbell made his invention on the 1st of May, 1867, while Hartshorn was not able to fix the date of his invention as earlier than about the 1st of August, 1867. It was thus shown that while Hartshorn had the elder patent he was the junior inventor, and as the claim in the Hartshorn patent of 1867 covered the invention described in the Campbell patent, there was a conflict between the two which it was sought to reconcile by reissues, Hartshorn becoming the owner by assignment of the Campbell patent. Accordingly, in the reissue of the Hartshorn patent of 1867, made October 31, 1876, being one of the patents now sued upon, the patentee enters the following disclaimer. He says: "I do not claim generally the arrangement of both the pawl and ratchet upon or in connection with the roller, so that the roller can be removed from its brackets without permitting the spring to unwind, as I believe such an arrangement of pawl or detent and ratchet, as shown in the patent of William Campbell granted to him September 24, 1867, had been known previous to being made by myself." He then adds his claim, modified as follows: "In a spring shade roller having a pawl or detent and ratchet, or their equivalent, constructed and arranged so as to engage automatically for holding the shade at any desired point or height, the combination with a ratchet, or its equivalent, upon the stationary spindle or stationary part of the fixture, of a hinged or pivoted pawl placed upon the end of the roller and acting substantially at right angles to the ratchet or notched hub."

In the Campbell reissue of October 31, 1876, the claims are stated as follows:

Digitized by Google

"1. In a spring shade roller, having a pawl or detent and a ratchet, or their equivalent, so arranged as to allow the shade to be drawn down or run up without obstruction, and which engage automatically with each other to hold the shade in any desired position, the arrangement of such pawl or detent on the roller which carries the notched spindle or ratchet, so that, when the roller is removed from its brackets, the tension of the spring will be preserved.

"2. In a spring shade roller, having a detent and ratchet, or their equivalent, constructed and arranged to engage automatically with each other for holding the shade, the combination, with the ratchet, or its equivalent, of a loose pawl or detent, moving in a chamber or guide, and adapted to engage with the spindle.

"3. The combination of the loose or sliding pins or detents F, constructed as described, with the flattened or notched shaft or spindle, substantially as herein shown and described."

It thus appears that the third claim of the reissued Campbell patent of 1876 is identical with the entire claim of the original Campbell patent of 1867, the first and second claims in the reissued patent being entirely new.

In the original Hartshorn patent of September 3, 1867, he characterizes the invention as an improvement upon that contained in his patent of 1864, in this, that the pawl and notched hub, being both connected with the roller, the spring is retained or prevented from unwinding equally as well when the roller is removed from its brackets or bearings as when adjusted in them; and he states his claim as follows: "The attaching of a pawl and a ratchet or notched hub to a window-shade roller provided with a spring, or to parts connected with said roller, in such a manner that the tension of the spring will, without any manipulation or adjustment of parts whatever, always be preserved, whether the roller be fitted in the brackets or bearings or removed therefrom, substantially as set forth." This claim in the reissued patent of October 31, 1876, is changed so as to read as follows: "In a spring shade roller having a pawl or detent and ratchet, or their equivalent, constructed and arranged so as to engage

Digitized by Google

automatically for holding the shade at any desired point or height, the combination with a ratchet, or its equivalent, upon the stationary spindle or stationary part of the fixture, of a hinged or pivoted pawl placed upon the end of the roller and acting substantially at right angles to the ratchet or notched hub."

In the case of *Hartshorn* v. *The Eagle Shade Roller Company & Others*, 18 Fed. Rep. 90, decided in the Circuit Court of the United States for the District of Massachusetts, the validity of the Campbell reissue of 1876 was questioned and affirmed. It appears also in that case that the original patent of Hartshorn of 1864 had been surrendered and a reissue obtained, No. 2756, August 27, 1867, being the same in evidence in this cause, for the purpose of showing the state of the art at that time. This reissue, No. 2756, was also questioned in the case just referred to, and held to be invalid on the ground that the reissued patent extended the claim of the original patent, so as to cover a shade roller where the pawl and the ratchet are both affixed to the roller, so that the roller might be detached from the bracket without unwinding; and that within the decision of *Miller* v. *Brass Company*, 104 U. S. 350, there had been an unreasonable delay in obtaining the reissue amounting to laches. That reissue was accordingly held void, but the Campbell reissue of 1876 was held valid, notwithstanding the admitted enlargement of the claim and the delay in obtaining the reissue for nearly ten years. The ground of the decision was that the patentee did not discover until in 1874 that he was entitled to a priority of invention over Hartshorn, whose patent of 1867 covered the same claim. His solicitor, who was also the solicitor for Hartshorn, in obtaining the two patents had assumed that Hartshorn was the first inventor, because his application was received first, and had framed the application of Hartshorn accordingly, and caused that of Campbell to correspond, limiting his claim to the particular form of the device, and granting to Hartshorn the broad claim now found in the Campbell reissue. This mistake seems to have been discovered, as already stated, by the taking of the testimony of the parties in the case of the

Digitized by Google

Salem Shade Roller Company v. *Harris, ubi supra*, the proceedings and decree in which are in evidence in this cause. The reissue of both patents was applied for and obtained within two years after the discovery of this alleged mistake, and as the exclusive right to the invention was apparently covered by the claim of the Hartshorn patent of 1867, it was inferred and held by the learned Circuit Court of the Massachusetts District that there were no laches in the delay, and no evidence of an abandonment to the public of the invention. In the opinion of that court it is said, 18 Fed. Rep. 92: "Campbell, misunderstanding perhaps his rights, or the true state of things, acquiesced through his solicitors, who were common to both parties, in the broad claim of Hartshorn. When the mistake was discovered, it was corrected by a simple exchange of claims. We are of opinion that, under these unusual circumstances, the lateness of the application is explained and shown to have been brought about by an actual mistake without fraud, and to have been one from which no innocent person could have suffered."

We are not satisfied, however, with either this reasoning or the conclusion. Campbell's acquiescence in Hartshorn's claim must be regarded, so far as he is concerned, as an abandonment of any right on his part to a patent for the same invention, and, having deliberately rested in that acquiescence for a period of between nine and ten years, it is too late, according to the settled course of decisions in this court, to resume his rights. It is, accordingly, no answer to this view to say that, in the meantime, the invention was not dedicated to the public by Campbell's abandonment, because it was covered by Hartshorn's claim; for, according to the supposition, Hartshorn's was a false claim, and though it may not be regarded as fraudulent, but founded upon an honest mistake, nevertheless the validity of his patent must have failed whenever called in question and the facts were made known, as they did become known, in the suit against Harris. The mutual mistakes of the two parties cannot be considered as correcting each other. Hartshorn claimed an invention to which he now confesses he was not entitled, and for that reason his original patent was

Digitized by Google

invalid. Campbell contented himself with the narrow claim originally contained in his patent of 1867, and thereby acknowledged that he was not entitled to the broader claim which he now asserts under his reissue. He had the means and the opportunity at the time the application for his original patent was pending to have asserted his claim to priority of invention; he chose not to do so. He acquiesced in the claim of his adversary; he cannot now claim what he then abandoned.

The question of laches is perhaps immaterial, for the reissue of the Campbell patent was not for the same invention described and claimed in the original. This does not rest merely on the enlargement and change in the nature of the claim. The specification itself was substantially altered. The alterations, it is said in argument, had the effect only of giving a more full, complete, and accurate description of the same mechanism; but, in point of fact, the alterations changed the shape of the specification in such a way as to admit the new and enlarged claim in a manner in which it could not have been made upon the original description. A comparison between the original and reissued patents shows that the specification of the latter has been materially changed so as to cover, as the invention of the patentee, that function of the structure by which the spring will be locked when the roller as a whole is removed from the brackets, in respect to which the original patent is entirely silent. We are, therefore, of the opinion that the first claim of the Campbell reissue, the only one alleged to be infringed in this case, is void.

We are also of opinion that the Hartshorn reissued patent, No. 7370, of October 31, 1876, is void on a different ground. That reissue disclaims what was claimed in the original patent, viz.: The arrangement of both the pawl and the ratchet upon or in connection with the roller, so that the roller can be removed from its brackets without permitting the spring to unwind, for the reason that such an arrangement had been previously invented by Campbell; and, instead of that claim, the reissued patent is confined to claiming "the combination with a ratchet, or its equivalent, upon the stationary spindle

Digitized by Google

or stationary part of the fixture, of a hinged or pivoted pawl placed upon the end of the roller, and acting substantially at right angles to the ratchet or notched hub." But, according to the admission of all the parties, Campbell was a prior inventor of the arrangement by which the pawl and ratchet were combined upon the roller in such a way as to allow the roller to be removed from its brackets without permitting the spring to unwind. Such a combination, therefore, was not the subject of a subsequent patent of itself, unless some additional novelty and utility were introduced into the combination by reason of some substantial change in the form or mode of operation of the parts. But in this reissued patent of Hartshorn there is nothing novel, either in the pawl or the ratchet, or the mode in which they jointly coöperate to produce the desired result. The fact that the pawl is described as acting substantially at right angles to the ratchet or notched hub does not seem to introduce any new or useful element. The combination covered by the claim in the reissued patent is, in law and in fact, merely a mechanical equivalent for that which was already covered by the Campbell patent, which had the priority of invention. For this reason, therefore, we hold the Hartshorn reissue of 1876 to be invalid.

It remains now only to consider the question of the alleged infringement of the David patent, No. 69,189. The invention is claimed to have been made in December, 1866, though the patent was granted on September 24, 1867. It is for an improvement upon the original invention of Hartshorn, as described in his patent of 1864, and must be construed with reference to that. It seems to have had for its object to do away with the noise produced in the Hartshorn roller by the contact of the pawl with the ratchet. That objection to the Hartshorn roller, David says in his testimony, was what incited him "to invent something that would do away with the noise." He gave a new form to the pawl and ratchet used, and also shifted the ratchet from the roller and made it a part of the bracket, which was a stationary part of the fixture, and applied the pawl or engaging part to the revolving roller. His pawl was "an arm or detent," hinged or pivoted in a radial slot in,

Digitized by Google

and arranged in the plane of the axis of, the roller; the free end of the arm projecting beyond the end of the roller, so that, as the latter revolved rapidly, the free end of the pawl or arm would be carried away from the axis of the roller by the motion of the roller itself. By this movement, when the roller was rapidly turned, sending the detent outward, it would pass over the elevated side of the journal-box, which constituted the ratchet. When the roller moved slowly or was in a state of rest, the action of gravity brought the detent toward the centre of the roller when the detent was above the centre, and at such time the detent engaged the elevated side of the journal-box or ratchet, and the revolution of the roller was arrested. His roller was also made of wood bored out at one end to receive the spring, and he placed at one and the same end of the roller the spring which caused the shade to rise, the stationary spindle to which one end of the spring was attached, and the arm or pawl, whereby he was able to saw off the other end of the roller to fit any width of window. As the pawl was on the revolving roller and the ratchet on the bracket, when the roller was removed from its brackets the pawl and the ratchet became disconnected, so that the spring would uncoil instead of holding the parts in place. The claims of the David patent are as follows:

"1. The arm or detent *k*, arranged upon the roller in such a manner that it moves toward and away from the centre or axis of the roller *a* by the action of gravity and centrifugal force, substantially as described.

"2. The combination and arrangement, at the same end of a shade roller, of a spring *e*, rod *d*, and arm or detent *k*, or their mechanical equivalents, substantially as described."

The device is illustrated by drawings accompanying the specification of the patent, as follows:

Fig. 2.

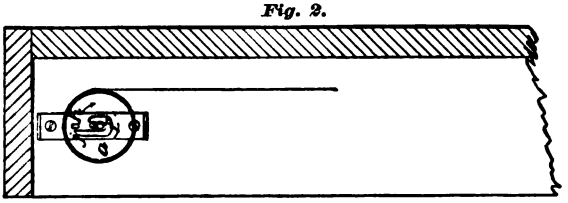

Digitized by Google

Fig. 1.

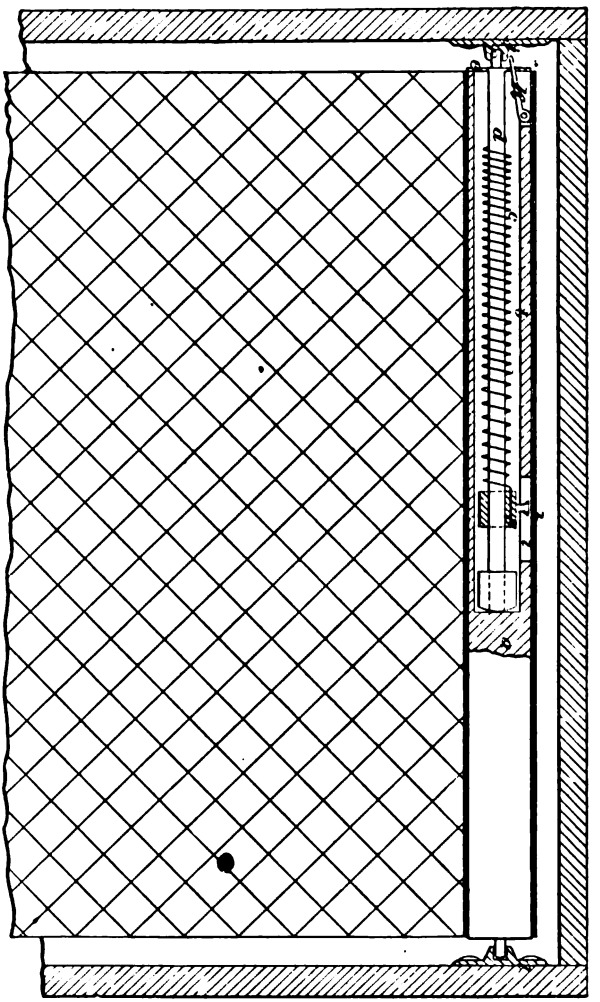

It is to be observed that in these claims nothing is said about the combination of the arm or detent *k* with the elevated side of the journal-box, which is a distinct and separate part of the mechanism; and yet it is perfectly obvious that it is only in combination with that separate ratchet that the arm or detent *k* performs any useful function at all. The fact

Digitized by Google

that the arm or detent *k*, arranged on the roller in the manner described, moves toward and away from the centre or axis of the roller in consequence of the motion of the roller itself, is not patentable independently of any useful combination in which it performs a necessary part. Any arm or detent, pivoted at one end and loose at the other, would necessarily follow the motion of the roller, the loose end flying outwardly. The same remarks apply to the second claim of the combination and arrangement of the roller and spring, the rod, and the arm or detent at the same end of the roller. They perform no function by reason of the circumstance of their being at the same end of the roller, except in conjunction with the ratchet on the bracket, and there is no novelty in such a combination and arrangement, as the same thing was found in the original Hartshorn patent. It follows, therefore, that in the construction of the David patent the claims must be confined, by reference to the specification, to the use of the devices named, in a shade roller, where the pawl or detent is upon the roller, moving with it, and the ratchet or engaging part is separated by being placed upon a journal-box or bracket, or other fixed part of the mechanism, and that it must also be limited to the particular form of the arm or detent described. It follows from this that the shade roller manufactured and used by the defendants is not an infringement of the David patent. In the defendants' roller, the pawl and the ratchet are both upon one end of the roller, the pawl being upon the revolving part and the ratchet upon the fixed part of the roller, and the pawl and ratchet are of a different form from those covered by the David patent.

We hold, therefore, upon this part of the case, there was no infringement.

The decree below was, therefore, right, and is affirmed.

Digitized by Google

Counsel for Defendant in Error.

ENFIELD *v.* JORDAN.

ERROR TO THE CIRCUIT COURT OF THE UNITED STATES FOR THE SOUTHERN DISTRICT OF ILLINOIS.

Submitted November 24, 1886. — Decided January 10, 1887.

In Illinois an incorporated "town" and an incorporated "village" are one and the same thing. *Welch* v. *Post*, 99 Ill. 471, overruled; and *Martin* v. *People*, 87 Ill. 524, followed.

The provision in the act of February 24, 1869, of the legislature of Illinois, giving authority to "any village, city, county, or township organized under the township organization law, or any other law of the state, along or near the route of the railway" therein mentioned, "to subscribe to the stock of the railroad company, or make donations to it," applies to a town along or near the route.

The proviso in the clause of the constitution of Illinois regarding municipal subscriptions to the stock of, or donations or loan of credit to, railroads or private corporations, applies to donations as well as to subscriptions to stock.

When a question in a certificate of division is stated in broad and indefinite terms, which admit of one answer under one set of circumstances, and of a different answer under another set of circumstances, this court must regard it as immaterial to the decision of the case.

The pendency of a suit relating to the validity of negotiable paper not yet due is not constructive notice to subsequent holders thereof before maturity; and this general rule cannot be changed by state laws or decisions, so as to affect the rights of persons not residing and not being within the state.

In Illinois the making the place of payment of a municipal bond at a place which is not the office of the treasurer of the municipality does not affect the validity of the bond, or charge the holder of such a bond, being negotiable and not yet matured, with notice of judicial proceedings between a previous holder and the municipality so as to work an estoppel.

This was an action at law to recover the amount of coupons cut from bonds not yet matured, issued by the plaintiff in error, a town in Illinois, and held by the defendant in error. Judgment for plaintiff. Defendant sued out this writ of error. The case is stated in the opinion of the court.

Mr. Charles H. Patton for plaintiff in error.

Mr. T. C. Mather for defendant in error.

Digitized by Google

Opinion of the Court.

MR. JUSTICE BRADLEY delivered the opinion of the court.

This is a suit brought by C. N. Jordan against the town of Enfield to recover the amount of twenty-two interest coupons for fifty dollars each, made by the town on the 1st of January, 1871, and payable in January and July, 1881, 1882, and 1883. The defendant pleaded non-assumpsit, and on the trial a jury was waived, and the cause was tried by the court, consisting of the circuit and district judges. A finding of the facts was made, and the judges being divided in opinion as to certain questions of law arising thereon, judgment was rendered in favor of the plaintiff, in accordance with the opinion of the presiding judge. The principal question of law was, whether an "incorporated town," as Enfield was, had power to make a donation of its bonds to the railroad company. Questions of estoppel were also raised, as hereafter noticed.

The facts found by the court, in accordance with an agreed statement presented by the parties, are substantially as follows:

1. That the town of Enfield was incorporated under an act of the General Assembly of the state of Illinois, approved March 15th, 1869. This act is set out in full, and is entitled "An act to extend the corporate powers of the town of Enfield." It is an ordinary town charter, making the town a corporation by the name and style of "The Town of Enfield." Its territorial limits were then prescribed, being one mile square, and the usual corporate powers were conferred. A town council, consisting of five trustees, together with a police magistrate, a treasurer, and a town constable, were directed to be elected annually, on the 1st Monday of May. The powers given to the town council were similar to those usually conferred upon municipal bodies; as, the power to levy and collect taxes; to appoint a clerk, supervisor of streets, and other officers; to appropriate moneys to pay the debts and expenses of the town; to make regulations for securing the general health; to provide a supply of water; to make side-walks, and to open, grade, pave, and repair streets; to establish markets; to regulate the public grounds; to organize a fire department; to regulate the police, &c.

Digitized by Google

The findings next set forth at large an act of assembly of Illinois, incorporating the Illinois Southeastern Railway Company, approved February 25th, 1867. This act authorized the company to construct a railroad from a point on the Illinois Central Railroad, by way of Fairfield in Wayne County, to the Ohio River. The route designated would naturally pass in the neighborhood of Enfield, and the railroad, when built, did pass through the town. The seventh section authorized counties through which the road might pass to donate to the company any sum not exceeding $100,000, and to give its bonds therefor. The ninth section authorized any town in any county under township organization to donate not to exceed $30,000; but such donation was payable only by taxation, no authority being given to issue bonds. This section related not to incorporated towns, but to townships forming the territorial subdivisions of counties. The eleventh section authorized "any incorporated city or town" through or by which the railroad might run to make donations not exceeding $10,000, on the same terms, propositions, conditions, and under the same restrictions, as provided for townships.

The findings next set forth an amendment to the railroad charter, approved February 24th, 1869, by the tenth section of which, authority was given to "any village, city, county, or township organized under the township organization law, or any other law of the state, along or near the route of the railway, . . . or anywise interested therein," to subscribe to the stock of the railroad company, or make donations to it to aid in the construction and equipment of its road, provided such subscription or donation was sanctioned by an election of the people. This section gave power to issue bonds for such subscriptions or donations; but towns are not included therein by name.

The court further found that, on the 1st of January, 1871, the town of Enfield issued and delivered to the officers of the Springfield and Illinois Southeastern Railway Company, a company formed by consolidation with the Illinois Southeastern Railway Company, the bonds and coupons now in controversy, copies of which are attached; that said bonds and coupons were

Digitized by Google

issued by said town by virtue of the power (if any) contained in the acts aforesaid, approved February 25, 1867, and February 24, 1869; that afterwards said bonds and coupons came to the plaintiff through mesne transfers from said Springfield and Illinois Railway Company; and that the bonds were registered in the state auditor's office.

The findings further set forth copies of the order of the town council of Enfield, made June 10th, 1870, appointing judges of election to be held in the town on the 11th of the same month, and a copy of the returns of the vote at said election for the purpose of determining whether the town would donate the sum of $7000 to the Springfield and Illinois Southeastern Railway Company, the result of which was — for donation 64 votes, against it, 1 vote; and that this was the only election held in relation to said donation.

The court further found that at the June term, 1880, of that court, judgment for the plaintiff against the defendant was rendered upon coupons then due, detached from the same bonds from which the coupons now sued on were taken. It was also admitted by the plaintiff that the Enfield town bond represented by Post in the case of *Welch et al.* v. *Post*, 99 Ill. 471, was one of the series of seven bonds in controversy in this suit, but as to which bond it was the plaintiff disclaimed any knowledge.

Upon these facts the judges who tried the cause have certified a difference of opinion upon the following questions, to wit:

1st. Whether the incorporated town of Enfield had power to vote and issue the bonds and coupons in controversy under any of the provisions of the acts above specified.

2dly. More particularly, whether said town had said power under the 10th section of the amendment of the railway company's charter, approved February 24, 1869.

3dly. Whether said town was not estopped from further defence by the litigation theretofore had between it and plaintiff.

4thly. In case there was power in the town under said laws to vote and issue said bonds and coupons, whether one of said

Digitized by Google

bonds, and the coupons thereto belonging, were void in the hands of plaintiff in this suit by reason of one Post having litigated it in the state courts of Illinois.

1. As to the first question, it is clear that the town derived no authority to issue the bonds from anything contained in its own charter. But, by the 11th section of the act incorporating the railway company, power is given to any incorporated city or town through or by which the railroad might run to make donations to the company, and to pay the same by taxes assessed by the county clerk at the request of the company. No authority, however, was given to issue bonds in payment of such donations. The 10th section of the amending act, approved February 24, 1869, contains the only authority which can be invoked for that purpose. But that section does not mention towns by name. It declares "that any village, city, county, or township . . . along or near the route of said railway or its branches, or that are in anywise interested therein, may in their corporate capacity subscribe to the stock of said company, or make donations to said company, to aid in constructing and equipping said railway;" with a proviso for holding an election on the subject, and authorizing the issue of bonds in payment, "said bonds to be signed, in case of a village, by the chairman of the board of trustees thereof; in case of a city, by the mayor thereof," &c. The town of Enfield is not a township, nor a county, nor a city. If it is within the purview of the act it must be because it is a village. The question then arises, is the incorporated town of Enfield a village within the meaning of the act?

This question depends upon the use of words "town" and "village" in the laws of Illinois. The general and popular distinction between them in English speech will not carry us far towards a solution. The dictionaries tell us that the word "town" signifies any walled collection of houses. (Johnson.) But that is its antique meaning. By modern use, it is said to be applied to an undefined collection of houses, or habitations; also to the inhabitants; emphatically to the metropolis. (Richardson.) Again, a town is any collection of houses larger than a village; or any number of houses to which be-

Digitized by Google

longs a regular market, and which is not a city. (Johnson, Webster, Ogilvie.) The same authorities define a village as a small collection of houses in the country, less than a town. According to this distinction, the law, in giving power to "any village, city, county, or township" to make donations and issue bonds to the railroad company, confers the power upon bodies of higher and lower degrees of municipal organization than towns, and leaves them out. This is an incongruity which we can hardly suppose was intended. The Supreme Court of Illinois, in a recent decision against the power, to which we shall presently refer, is obliged to say, "Why incorporated towns were omitted in that act cannot now be known."

In seeking aid from collateral sources, we shall probably derive more light from the political use of the terms "town" and "village" in this country, than from general lexicography. In New England and New York, towns are the political units of territory, into which the county is subdivided, and answer, politically, to parishes and hundreds in England, but are vested with greater powers of local government. In Delaware the counties are divided into hundreds, the words "town" and "village" being indiscriminately applied to collections of houses. In Maryland and most of the Southern States, the political unit of territory is the county, though this is sometimes divided into parishes and election districts for limited purposes. The word "town" is used in a broad sense to include all collections of houses from a city down to a village. Thus, in Virginia, by an act passed in 1778, on the death or removal of "any one of the trustees and directors of the several towns within this state, not incorporated," provision is made for filling the vacancy; by act of 1793, "electors of towns entitled to representation in the House of Delegates" are authorized to vote at their respective court-houses for representatives in Congress; by the Revised Code of 1819, "trustees of the respective unincorporated towns of this Commonwealth" are empowered to make by-laws to prohibit horse racing in the streets of the town; by the Revised Code of 1849, in the chapter entitled "Of Towns," the council and board of trus-

Digitized by Google

tees of any town, heretofore or hereafter established, may cause to be made a survey and plan of the town, showing each lot, public street, &c., to lay out, alter, improve, and light the streets, and to adopt various municipal regulations relating to public grounds, markets, health, nuisances, supply of water, fire departments, &c. Most of these towns were nothing but villages. The close connection between Virginia and Kentucky and the early settlement of Illinois renders this use of the word "town" in the mother state apposite to the question under consideration.

In New Jersey, Pennsylvania, Ohio, Indiana, Michigan, and Illinois, the subdivisions of a county, answering to the towns of New England and New York, are called townships, though the word "town" is also applied to them in Illinois. In these states the words "town" and "village" are indiscriminately applied to large collections of houses less than a city.

These results are gathered from an examination of the laws and constitutions of the states named; and we should have no hesitation in saying that, in Illinois, an incorporated town and an incorporated village were one and the same thing, were it not for the decision of the Supreme Court of that state to the contrary in the case of *Welch* v. *Post*, 99 Ill. 471, already alluded to, which decision was made in relation to the identical bonds in question in this suit.

That case arose upon a bill filed in the Circuit Court of White County by citizens, property owners, and tax-payers of the town of Enfield against the village and county collectors of taxes and the unknown holders of the bonds, to restrain the collection of taxes for their payment, on the ground that there was no authority of law to issue them. The bill prayed that the bonds might be declared null and void in whosesoever hands they might be. A decree was taken for confessed in April term, 1877; but, at the October term, 1879, one Post, of New York, presented a petition, stating that he was the owner of one of the bonds, and praying that the cause might be reinstated, which was done. The cause was then tried upon an agreed statement of the facts (much the same as in the present case), and the Circuit Court decided against the plaintiffs, and

Digitized by Google

dismissed the bill. This decree was reversed by the Supreme Court in June, 1881. The ground of this judgment, as stated in the opinion of the court, was, that the town of Enfield had no authority to issue the bonds; that no such authority was given in the charter of the town, because none was expressed, and the making of donations to railway corporations, and issuing interest-bearing bonds in payment thereof, is not among the usual or implied powers possessed by municipal corporations; that it was not given by the act of 1867, incorporating the railway company, because the donations authorized by that act to be made by incorporated cities or towns, were directed to be paid by taxation, and no authority was given to issue bonds; that it was not given by the amending act of February 24, 1869, because that act only gives the power to villages, cities, counties and townships, and does not mention incorporated towns, and the act cannot be extended by implication. The court says: "Keeping in mind, as must be done, [that] there is no implied authority in municipal corporations to make donations to railway companies, and to issue interest-bearing bonds in payment, it must appear there is express enabling legislation to that effect before municipal corporations can properly assume to exercise such extraordinary powers. No such authority is to be found anywhere, in any public or private law of this state, applicable to the town of Enfield, at the time that corporation undertook to and did issue the bond held and owned by the respondent, and having been issued without authority of law, such bond constitutes no valid obligation that can be enforced against the municipality."

Two justices, Dickey and Sheldon, dissented from this opinion, and adhered to an earlier ruling of the court made in 1877, in the case of *Martin* v. *The People*, 87 Ill. 524, in which it was adjudged that the terms "towns and villages" are used synonymously in the laws of Illinois. The proceeding in that case was instituted by the collector of Cook County, for the collection of certain special assessments levied by the town of Lake upon the real estate within its bounds, the mode of collection pursued being that pointed out in article IX of the act entitled "An act to provide for the incorporation of cities and

Digitized by Google

villages," approved April 10th, 1872, conferring upon all cities, towns, and villages which might adopt it (as all were authorized to do) municipal powers of a very comprehensive character. It was contended on the part of the defendants that, as to towns, the act was unconstitutional and void, because "towns" are not mentioned in the title, but only "cities" and "villages." The Supreme Court of Illinois, however, did not concur in this view, but held that an incorporated town and incorporated village, in the laws of that state, are one and the same thing. The court say: "The word 'town,' as found in our statutes, is not always used in the same sense. In the act relating to township organization, it is provided that counties adopting that system for the management of county affairs shall be divided 'into towns,' (sect. 5, page 1067, Rev. Stat. 1874,) consisting, generally, of a township according to the government surveys. These towns are a species of municipal incorporations, and constitute an integral part of the county, and are closely interwoven with the management of county affairs. In the statute found in Revised Statutes of 1845, page 111, the word 'town' is used in a very different sense. It there plainly means a village, or a small collection of residences; and by that act it is provided that the inhabitants of any such town may, under certain circumstances, 'become incorporated for the better regulation of their internal police,' under the management of a board of trustees, with capacity to sue and be sued, to keep a record of their proceedings, and with power to make by-laws and ordinances, to prevent nuisances, to prohibit gambling and other disorderly conduct, to prevent fast driving and indecent exhibitions, to license public shows, to regulate markets, sink wells, to keep open and repair streets, to protect the town from fires, to levy and collect taxes, to enforce their ordinances, &c. Such an organization, in our statutes, was formerly always called an 'incorporated town,' but in our later statutes they are sometimes called villages, and their trustees are called village trustees. An examination of the special charter of the town of Lake, (4th vol. Special Laws of 1869, page 324,) shows it to be a municipal corporation of the latter character, and, in so far as its organization under that charter is

Digitized by Google

concerned, it is merely an incorporated town, or, in other words, 'an incorporated village.' Before that charter was enacted, the town of Lake was merely a municipal corporation under the laws relating to township organization. By this charter, the inhabitants of that town took another form of corporate existence, and became, also, in contemplation of law, what, in the Revised Statutes of 1874, is known as a village." The court then, after enumerating the powers conferred by the town charter, add: "All the powers are of the kind usually conferred upon cities or villages, and of the character conferred upon cities or villages by the general law of 1872, of which this article 9 is a part. Before the adoption of our present Constitution, many special charters, conferring like powers, were granted by the General Assembly, and in most cases such corporations are called towns, but in some cases they are called villages; but the character and nature of these corporations, whether called, in their charters, towns or villages, were in all cases substantially the same." After referring to a number of these charters, the titles of which ran, "An act to incorporate the village of A., or B.," but in the body of which the several communities were called villages and towns indiscriminately, the court concludes as follows: "We, therefore, hold that the town of Lake was, and is, a village in the sense in which that word is used in § 168 of the general act of 1872 relating to cities and villages; that it, therefore, is one of the municipal incorporations which, by that section, are authorized to avail themselves of the provisions of article 9 of that act as an amendment to their charters."

We have quoted more fully from the judgment in this case, because it is not only directly in point, but it shows historically the use of the terms town and village in the legislation of Illinois. Its bearing on the present case is enhanced by the fact that the towns of Lake and Enfield were incorporated at the same session of the legislature, and invested with like powers and form of organization.

Both of the cases to which we have referred arose after the bonds and coupons now in controversy were issued, and neither of them can control our decision upon the rights of the parties

Digitized by Google

here, any further than as they address themselves to our judgment upon the true construction of the law; and we feel compelled to say that we regard the views expressed in the case of *Martin* v. *The People* as the most sound and convincing of the two. It seems to us that the legislature of Illinois, in the act for the incorporation of cities and villages, intended to avoid hereafter the use of the ambiguous word "town," as applied to the smaller class of incorporated municipalities, and to designate them by the single term of "village." This conclusion is, on the whole, so obvious that we do not hesitate to adopt it, and to hold that the town of Enfield is a village within the meaning of the amending act of February 24th, 1869. We may add, as a strong corroboration of what has been said, that in the 9th section of that act the word "town" is used indiscriminately with the word "village." The language is: "It shall be lawful for the incorporate authorities of any *incorporate city or village* through which said railway shall be located to donate or lease to said railway company, as a right of way, the right to lay a single or double track through said *city or incorporated village*, or any portion of the same, or any street or highway, that the said railway company shall elect for that purpose, except at the option of the said railway company and corporate authorities of *such towns or cities*."

An additional point, however, is made in relation to the authority of the town to issue the bonds under consideration. Supposing that such authority is found in the acts referred to, it is still contended that it was abrogated by the constitution of the state adopted on the 2d day of July, 1870. By a section of that constitution it is declared that "no county, city, town, township, or other municipality, shall ever become subscriber to the capital stock of any railroad or private corporation, or make donation to or loan its credit in aid of such corporation: *Provided, however*, That the adoption of this article shall not be construed as affecting the right of such municipality to make such subscriptions where the same have been authorized, under existing laws, by a vote of the people of such municipalities prior to such adoption." It is urged that whilst the proviso of this section saves the power to make

Digitized by Google

subscriptions to the capital stock of private corporations, it does not save the power to make donations to them. We did so decide in the case of *Town of Concord* v. *Portsmouth Savings Bank*, 92 U. S. 625; but in the subsequent case of *Fairfield* v. *County of Gallatin*, 100 U. S. 47, that decision was overruled in deference to several decisions of the Supreme Court of Illinois to the effect that donations as well as subscriptions were within the meaning of the proviso. The authorities are collected in the latter case, and need not be repeated here. We held, as we had often held before, that this court will follow the construction which has been uniformly given by the highest court of a state to its constitution and laws.

To the first and second questions, therefore, our answer is, that the town of Enfield had power under the 10th section of the amending act approved February 24th, 1869, to vote and issue the bonds and coupons in controversy.

The third question is, whether the town was not estopped from further defence by the previous litigation in this [the circuit] court upon the pleadings and facts stipulated and judgment rendered therein? The stipulation and finding on which this question is raised is as follows, to wit: "That at the June term, A.D. 1880, of this court judgment for the plaintiff against the defendant herein was rendered upon coupons then due, detached from the same bonds from which the coupons in evidence in this suit were taken." The coupons on which said former judgment was rendered were different coupons from those involved in the present suit. This suit, therefore, was brought upon a different cause of action from that upon which the former suit was brought. Whether the same issues were raised and passed upon in that suit which are raised in this, the stipulation does not inform us. The question is too general in its terms to admit of a precise answer. If the defendant sought to set up in this suit some new defence, which was not made in the former one, and not necessarily decided therein, it should have been allowed to do so, under the ruling of this court in *Cromwell* v. *Sac County*, 94 U. S. 351, 354. But we are left in entire ignorance on the subject. As no

Digitized by Google

proper answer can be given to a question stated in such broad and indefinite terms, which admits of one answer under one set of circumstances, and of a different answer under another, we must necessarily pass it by as immaterial to the decision of the case in this court.

The fourth and last question propounded by the judges below is, whether one of the bonds and the coupons thereto belonging are void in the hands of the plaintiff in this suit by reason of one Post having litigated it in the state courts of Illinois? The finding on which this question is based is as follows, to wit: "It is admitted by the plaintiff in this suit that the Enfield town bond represented by Post in the case of *Welch et al.* v. *Post*, 99 Ill. 471, was one of the series of seven bonds now in controversy in this suit; but in making said admission plaintiff disclaims any knowledge of which one it was, or any connection with said suit." It is rather a singular proceeding to refer this court to a volume of reports to eke out the record on which it is to pass judgment. The reported case is not even printed in the record before us, and we do not feel called upon to give it a very critical examination in reference to the point now raised, and might well refuse to consider it at all. It consists merely of the opinion of the court already referred to and commented on. The nature and object of the suit and the principal proceedings had therein have already been stated. For the purpose in hand, it is sufficient to remark that the bond held by Post was not matured, and will not mature till the year 1891, and, therefore, a decree against Post has no binding effect on a subsequent holder of the bond purchasing the same before maturity and without notice. To have made the decree effectual against the bond itself, Post should have been required to produce it in court, in order that it might have been cancelled. If he parted with the bond pending suit, it would make no difference. The subject of notice by *lis pendens* in relation to negotiable securities was considered by this court in the cases of *Warren County* v. *Marcy*, 97 U. S. 96, and *Carroll County* v. *Smith*, 111 U. S. 556, and needs no further discussion. The general rule announced in those cases is, that the pendency of a suit relating

Digitized by Google

to the validity of negotiable paper not yet due is not constructive notice to subsequent holders thereof before maturity. This general rule cannot be changed by state laws or decisions so as to affect the rights of persons not residing and not being within the state, any more than publication of suit can be made constructive service of process upon such persons. Rights to real property and personal chattels within the jurisdiction of the court, and subject to its power, may be affected by *lis pendens*, but not those acquired by the transfer of negotiable securities or by the sale of articles in market overt in the usual course of trade. See *Brooklyn* v. *Insurance Co.*, 99 U. S. 362; *Empire* v. *Darlington*, 101 U. S. 87; *Pana* v. *Bowler*, 107 U. S. 529, 545.

But it is contended by the plaintiff in error that the bonds on their face show an illegality as to the place of payment sufficient to put a purchaser upon inquiry, and, therefore, to subject him to notice of the proceedings by which the bond held by Post was declared void. This argument is based upon the fact that the bonds are payable not at the office of the treasurer of the town of Enfield, but "at the First National Bank of Shawneetown, Illinois," the principal town in the adjoining county, about thirty miles distant, and the terminus of the railroad passing through Enfield. As the statute which gave the authority to issue the bonds is silent as to the place of their payment, we are at a loss to see how the place named therein can have the effect supposed. Counsel admit in argument that it does not render the bonds void, but insist that the town had no power to make them payable at any other place than the office of the town treasurer. For this they cite *The People on the relation of the Peoria and Oquawka Railroad Company* v. *The County of Tazewell and its Supervisors*, 22 Ill. 147; *City of Pekin* v. *Reynolds*, 31 Ill. 529; and *Sherlock et al.* v. *The Village of Winnetka*, 68 Ill. 530. In these cases, it is true, the Supreme Court of Illinois held that a municipal corporation cannot lawfully make its obligations payable at any other place than the office of its treasurer; but the court also held that the making of them payable elsewhere does not affect their validity. The case last cited was a bill by

Digitized by Google

tax-payers to enjoin the collection of taxes levied to pay interest on certain bonds of the village, the validity of which was questioned. They had been issued to pay for erecting a building for educational purposes, which the court held the village had no power to erect. The question of the place of payment of the bonds only came up incidentally, as one of the arguments of counsel used against their payment. On this point the court say: "The objection that the bonds are illegally made payable at a bank in Chicago does not invalidate them, as was held in *Johnson* v. *Stark County*, 24 Ill. 75. The agreement to pay at that place is void, but the balance of the coupons and bonds are not rendered invalid for that reason. In paying the interest, the treasurer should not obey that agreement in the bond, but pay it at the village treasury. If he were to deposit the money in the bank for the purpose, and it were to break, or the money should otherwise be lost, he and his sureties would no doubt be liable for the loss growing out of his illegal act in placing the money in a place unauthorized by law." The court did not regard this as a ground for enjoining the collection of taxes; but enjoined their collection upon other grounds.

Now, giving to these cases all the effect due to them, we do not see how the fact that the bonds and coupons of the town of Enfield were made payable at Shawneetown, can prejudice a *bona fide* holder thereof, or charge him with notice of prior proceedings against other parties who once held them. The most that can be said is, that a person purchasing the bonds may be bound to know that the place named for payment therein is not binding on the county, and that, though made payable elsewhere, their legal place of payment is at the office of the treasurer of Enfield. The question whether a municipal corporation, authorized to issue bonds, may, or may not, make them payable at a place other than its own treasury, (there being no statutory direction on the subject,) is one of general jurisprudence, in reference to which the courts of Illinois take a particular view. Other courts take a different view. There is nothing in the constitution of the municipal bodies of that state, so far as this particular power is concerned,

Digitized by Google

different from that of similar bodies in other states. When the bonds of an Illinois municipality are offered for sale in the market, and on their face are made payable at a different place from the treasury of such municipality, even though it be conceded that a purchaser is bound to know that, by the jurisprudence of Illinois, the bond is legally payable at such treasury, that is all he is bound to know. The same jurisprudence informs him that the naming of a different place for payment does not affect their validity, nor the obligation of the municipality to pay them. At all events, we are of opinion that the place of payment named in the bond which was formerly in the hands of Post, did not affect the present holder with notice of the proceedings in which Post was a party. Those proceedings are an estoppel against Post, even though, in our judgment, the decision was based on an erroneous view of the law; and they would be an estoppel against Jordan if he had notice of them when he took the bond. But there is no evidence that he had any such notice, and we think that the fact of the bond being payable at a place where the town of Enfield had no authority to make it payable — a fact which it is admitted does not affect its validity — was not sufficient to put Jordan on inquiry. Though made payable in Shawneetown, it is legally payable at Enfield, and is as valid and binding on the town as if it were in terms made payable there.

The answer to the fourth question, therefore, is, that one of the bonds, and the coupons thereto belonging, are not void in the hands of the plaintiff by reason of Post having litigated the bond in the state courts of Illinois.

The judgment of the Circuit Court is affirmed.

Digitized by Google

HUBBARD *v.* INVESTMENT COMPANY.

ERROR TO THE CIRCUIT COURT OF THE UNITED STATES FOR THE DISTRICT OF MASSACHUSETTS.

Argued December 17, 20, 1886. — Decided January 17, 1887.

On the facts in this case as stated in the opinion of the court, *Held*, That there was no error in the instruction of the court below to the jury to find a verdict for the defendant.

This was an action at law. The case is stated in the opinion of the court.

Mr. Robert Dickson Smith and *Mr. William Warren Vaughan* for plaintiff in error.

Mr. Hugh Porter for defendant in error.

MR. JUSTICE MATTHEWS delivered the opinion of the court.

This is an action at law brought by the plaintiff in error, a citizen of Massachusetts, against the defendant in error, in the Supreme Judicial Court of that state for the county of Suffolk, and removed by the defendant, a corporation and citizen of the state of Illinois, into the Circuit Court of the United States for that district. The New York, New England and Western Investment Company is a corporation chartered by the state of Illinois under the name of the Edgar County Land and Loan Company, its name having been subsequently changed. It has an authorized capital stock of $100,000, subject to be increased to $200,000. Its powers were conferred by the third section of an act approved March 8, 1867, which reads as follows:

"SECTION 3. The said corporation shall have power to borrow money and to receive money in deposit and pay interest thereon, and to loan money within or without this state at any rate of interest not exceeding that now or hereafter allowed by law to private individuals, and to discount loans,

Digitized by Google

and in computation of time thirty days shall be a month and twelve months a year, and to make such loan payable either within or without this state, and to take such securities therefor, real and personal, or both, as the directors and managers of said corporation shall deem sufficient, and may secure the payment of such loans by deeds of trust, mortgages, or other securities, either within or without this state; may buy and sell negotiable paper or other securities; may open and establish a real estate agency; may purchase and sell real estate, and shall have power to convey the same in any mode prescribed by the by-laws of such corporation; may accept and execute all such trusts, whether fiduciary or otherwise, as shall or may be committed to it by any person or persons, or by order of any court or tribunal or legally constituted authority of the state of Illinois, or of the United States, or elsewhere; may make such special regulations in reference to trust funds, or deposits left for accumulation or safe-keeping, as shall be agreed upon with the depositors or parties interested, for the purpose of accumulating or increasing the same; may issue letters of credit and other commercial obligations, not, however, to circulate as money, and may secure the payment of any loan made to said company in any way the directors may prescribe."

The home office of the company was at Chicago, but a branch was established in New York City, which became, and was at the time of the transactions in question in this suit, the main office at which its business was chiefly transacted. The company also directed the establishment of branch offices at Philadelphia and Boston. The relation between the defendant and the plaintiff grew out of a contract entered into between them, having in view the establishment of the office in Boston. A contract in writing was entered into between them on the 17th day of December, 1879, the substantial parts of which are as follows: The plaintiff, Hubbard, agreed "to open and take charge of a branch office of said corporation at Boston, Mass.; to devote his best energies and time to the interests of said corporation, as far as may not be inconsistent with a due regard for the interests of such legal clients

Digitized by Google

as he may have from time to time, always considering his duties towards said corporation as of the utmost importance; to use his best endeavors to place in New England, where it may be of greatest advantage to said corporation, twenty-five thousand dollars ($25,000) of the capital stock of said party of the first part, and generally to do and perform, (within his 'division,' so called,) all acts for the furtherance of the interests of said party of the first part as shall be consistent with honor, honesty, equity, and fair dealing."

On its part, the defendant agreed "forthwith to elect said party of the second part one of its directors, with the title of assistant vice-president; to give said party of the second part the direction of said office designated as the Eastern Division, subject, of course, to the by-laws of said corporation now in force or hereafter to be enacted; to furnish said office and its furniture, all the books, signs, circulars, and advertising, which said corporation may require; to pay the salary of its book-keeper, and of such other employés as may be deemed necessary and proper, and generally to pay the running expenses of said office; to pay to said party of the second part the sum of eighteen hundred dollars ($1800) per year as 'salary,' together with all expenses of travel incurred by him on its behalf, and a further amount, as 'commissions,' to be determined as follows, to wit: All business originating in said 'Eastern Division,' which shall include the whole of Maine, New Hampshire, Vermont, and Massachusetts, or transacted at said Boston office, shall be 'valued' according to the amount of gross profit coming therefrom to said corporation, or which can be rightfully claimed by it. After deducting from the aggregate of such profits for each year the sum of fifty-four hundred dollars ($5400), plus the amount of book-keeper's salary, said party of the second part shall be entitled to one-third of the balance as commissions, as above. Settlement shall be made between said parties as often as once a month, said party of the second part becoming entitled to said 'commissions' *pro rata* as soon as the same shall have been earned and received, and shall exceed in the aggregate the amount of $5400, plus salary of book-keeper, as above set forth, and shall be paid 'in kind.'

Digitized by Google

"Said party of the first part shall favor as much as practicable said Boston office, to the end that parties within its precincts may deal directly with it. All legal services required by said party of the first part, for itself or others, in suits or proceedings in court, or in the drawing of railroad deeds and mortgages, shall be entitled to extra compensation from said party of the first part."

It was also provided, that "this agreement shall go into effect from and after the sale or purchase by said party of the second part at par of ten thousand dollars ($10,000) of the capital stock of said party of the first part and payment therefor, and shall be in force for one year, at the end of which time there shall be a general accounting together of said parties, and a new agreement may be made and entered into, if the mutual interests of said parties may so require."

This agreement went into effect, according to its terms, by the plaintiff taking and paying for $10,000 of its capital stock at par on the 24th of December, 1879. On the 5th of June, 1880, he was elected a director by the stockholders at their annual meeting in Chicago. The plaintiff opened in Boston the branch office contemplated, and performed all the services required of him during the year fixed by his contract; was paid his salary of $1800, and reimbursed for all outlays, as provided in the contract of December 17, 1879, rendering monthly accounts to the New York office, as required, to which no objection was ever made; and, apart from the transaction here in question, there was no controversy as to his interest in any part of the gross profits arising under the contract.

It also appeared from the evidence — the whole of which is set out in the bill of exceptions — that, through a contract with the Kansas City, Burlington, and Santa Fé Railway Company, of which W. H. Schofield was then president, the defendant had for sale certain bonds of that company, and, in order to place them before other railroads and investors, it had issued a circular, dated May 15, 1880, offering for sale these bonds, which were to cover not only the extension of that road to Burlington, Kansas, but also that portion of the

Digitized by Google

road already built from Ottawa to Burlington, and on this completed portion of the road of forty-five miles there was already outstanding $600,000 of first mortgage bonds, which were to be taken up and cancelled from the proceeds of the new bonds offered in this circular. One of these circulars was sent from the New York office to the plaintiff at the Boston office. A negotiation was commenced and carried on personally by J. C. Short, president of the defendant company, with the Atchison, Topeka and Santa Fé Railroad Company in interviews, some of which occurred at the office of the latter company in Boston. At some of these the plaintiff was present, at others not. At one of these interviews, on June 10, 1880, at which the plaintiff was not present, a preliminary agreement or memorandum between the parties was entered into, signed by the president of the Atchison, Topeka and Santa Fé Railroad Company, the president of the Kansas City, Burlington and Santa Fé Railway Company, and Short, as president of the defendant company. This memorandum contemplated the purchase by the Atchison, Topeka and Santa Fé Railroad Company of the railroad of the Kansas City, Burlington and Santa Fé Railway Company, and, as a means of accomplishing that, the purchase of the mortgage bonds of the latter company, with a view to a foreclosure of the mortgage and the reorganization of the company. This memorandum was supplemented by a subsequent agreement entered into on the 13th of June, 1880, to which the parties were the Atchison, Topeka and Santa Fé Railroad Company, the New York, New England and Western Investment Company, Alden Speare, Charles S. Tuckerman, and Lucien M. Sargent, the three last named to act as trustees to hold the bonds to be used in consummating the purchase. The object of this contract was to provide and declare the modes by which the property of the Kansas City, Burlington and Santa Fé Railway Company should be sold and delivered to the Atchison, Topeka and Santa Fé Railroad Company, free from incumbrance, and contemplated the foreclosure and sale of the road for that purpose. The transaction was completed in accordance with the terms of the contract. It resulted in a gross profit to the

Digitized by Google

New York, New England and Western Investment Company, as is alleged by the plaintiff in his declaration, of $117,833.33, of which the plaintiff claims to be entitled to recover one-third, on the ground that the business originated and was transacted and said contract was made in said Eastern Division or Boston office, and that the plaintiff himself procured, or was instrumental in procuring and carrying out, the same.

The cause was tried by a jury, when, at the close of the plaintiff's evidence, the defendant asked the court to instruct the jury to render a verdict for the defendant, which was done, and a verdict rendered accordingly, and judgment thereon, to reverse which this writ of error is prosecuted.

The error assigned is in the ruling of the court in this instruction to the jury. The principal question, in our view of the case, is one of fact; it is whether, within the meaning of the contract between the parties, made December 17, 1879, the business in question, out of which these profits arose, originated in the Eastern Division, as therein described, or was transacted at the Boston office.

Upon a careful review of the entire evidence, giving to the plaintiff the benefit of all inferences which might reasonably have been drawn by the jury, we are of the opinion that the court below did not err in instructing the jury to find a verdict for the defendant. In our opinion, it clearly appears from the evidence, in which there was no conflict, that the business did not originate in the Eastern Division, and was not transacted at the Boston office. It would serve no useful purpose to go into any detail of the testimony, which, we think, admits of no different conclusion.

The plaintiff's declaration, in addition to counting on the special contract in writing, contained also common counts for work and labor done and services performed in and about the negotiation of the contract for the sale of the Kansas City, Burlington and Santa Fé Railway, under which a recovery might have been had, in the absence of a special contract, for the reasonable value of services as a broker, if any such had been performed; but in the present case no such recovery could be had, because it clearly appeared that whatever was

Digitized by Google

done by the plaintiff in that behalf was done under the special written contract, and not upon any implied contract for compensation.

The judgment is accordingly affirmed.

Digitized by Google

APPENDIX.

I.

RULE 20. SECTION 1.[1]

SUPREME COURT OF THE UNITED STATES.

OCTOBER TERM, 1886.

MONDAY, January 10, 1886.

MR. CHIEF JUSTICE WAITE announced as follows:

It is proper to call the attention of the bar to the practical operation of a rule which was adopted for the convenience of parties, without being inconvenient to the court. During this term there have been submitted under the rule fifty cases; and of these, thirty-one came in during the last week, the ninety days having expired on Saturday last. Had they been submitted ratably, as the term progressed, they could all have been disposed of without interfering with the current business, and without being at all burdensome to the court. As it is, we are oppressed with a great accumulation of this kind of business at a time in the term when we have a large number of other cases under consideration.

Unless the practice is changed, we shall be compelled to abolish this rule, or make some special order in reference to its administration.

[1] See 108 U. S. 584.

Digitized by Google

II.

NOTE TO SHIPMAN *v.* DISTRICT OF COLUMBIA, *ante*, 148.

The case of *Shipman v. District of Columbia* in the Court of Claims is reported in 18 C. Cl. 291–339. The findings of fact made by the Court of Claims occupy about thirty-two pages of the report. The opinion, however, states the facts upon each point decided with sufficient fulness. The syllabus of the reported case, and the opinion of the Court of Claims referred to in the opinion of this court on page 148, *ante*, are as follows:

"SHIPMAN *v.* DISTRICT OF COLUMBIA.

In October, 1872, the secretary of the Board of Public Works of the District of Columbia wrote to the claimant that the Board had awarded him a contract at Board rates. The Board had, in fact, awarded a contract, but had not fixed rates. The claimant, after seeing the engineer of the district, went to work in 1872, and rendered bills from time to time, and was paid at less rates than Board rates. In 1873 he resumed work, and rendered bills from time to time, and was paid at the same rates as in 1872. The claimant having done a quantity of macadam pavement on the work which was not called for by the agreement, the District recognized it and paid him for it. The Board of Public Works in 1872 ordered claimant's contract to be reduced to writing, but it was not reduced to writing and signed until December, 1873, when it was signed by Cooke, Shepherd, and Magruder on behalf of the Board. Cooke was a member in 1872, but had ceased to be one before December, 1873. The contract as signed corresponded in rates with the bills as rendered and paid, and they were not Board rates. Claimant contends that the contract, by reason of mutual mistakes, varied from the intent of the parties, and that the rates of payment should have been board rates, and asked the court, as a Court of Equity, to reform it. *Held:* That the practical construction given by both parties showed that there was no mistake; that the contract, as signed, expressed the will of the parties; that when signed it related back to the work done previous to signature; and that it was immaterial whether it was valid as a contract, since, if invalid, it was still evidence of the intention of the parties.

In 1874 the contract was renewed and extended so as to take in a much larger work. The claimant constructed a wall which contained more cubic yards of masonry than the plans of the engineer of the district called for. It appeared that this was done with the knowledge of the commissioners and of the assistant engineer, and that there was no concealment, and that it might have been known to the chief engineer. *Held:* That money paid for this, amounting to $20,459.19, could not be recovered back on a counter-claim alleging it to have been paid under a mistake of fact.

The contract called for the construction of the wall at five dollars per cubic yard, and said nothing about excavations for it. *Held:* That the claimant was bound to make the excavations for the wall without extra pay for it.

The contract called for a lining of coarse gravel in the rear of the retaining wall and made no provision for payment. There was no gravel near the work. *Held:* That the claimant was entitled to compensation for this work.

The contract called for a coping of ordinary stone on the wall. By agreement of parties North River bluestone was substituted at an extra compensation of forty cents per foot. Claimant contended that this was per square foot; defendant, that it was per running foot.

Digitized by Google

Claimant contended further that he was entitled to be paid for the coping as masonry. Defendant did not deny this. Defendant paid an arbitrary rate of seventy-four and one-half cents per running foot, which claimant accepted. *Held:* That this was a settlement of that part of the dispute, and that claimant could not recover for the coping as masonry in addition.

Claimant under an extension of the contract did work on another road. His work was measured, and a bill aggregating about $15,000 was rendered. The commissioners made out a new bill, fixing the rates so as to produce an aggregate of about $22,000, in order to make a payment in bonds of the district equivalent to a payment in cash, and paid the bill so made in bonds. *Held:* That a payment of a claim against the district in its bonds at less than par was illegal; that this was an attempt to do indirectly what could not be done directly; and that in stating an account it must be treated as a cash payment of the face of the bonds."

"DAVIS, J., delivered the opinion of the court.

It is but simple justice to the counsel on both sides to say at the outset that the court has derived the greatest assistance from their able and full discussion of the complicated issues involved in this case, both in their briefs and in their oral arguments.

The items in the claimant's bill of particulars depend, in some measure, upon the force to be given to a contract known as contract No. 561.

In the autumn of 1871 the claimant offered to put the canal road between Aqueduct and Chain Bridges in order. Apparently his terms were not acceptable, for no notice was taken of them.

A year later the Board ordered that a contract should be awarded him for this work, and directed that he be notified of its action.

An attempt was made to connect this act with the claimant's acts of the previous year; but the findings show no such connection, and in our opinion there was none.

The secretary of the Board at once wrote to the claimant, but instead of notifying him of the real doings of the Board, he notified him that a contract had been awarded him 'at Board rates,' which had not been alluded to by the Board in their action.

The claimant before commencing work saw the defendant's officers in relation to the work and the contract, but what took place can only be inferred from subsequent acts of both parties.

The claimant did work to the amount of a few thousand dollars in the autumn of 1872, for which he was paid in part. In the spring of 1873 he resumed work and continued at it until the autumn, when a final measurement was had of the work done to that time. For all this work he was paid at Board rates with two exceptions. 1st. He was paid for stone masonry at $5 per cubic yard, while the Board rate was $6.50 per perch. 2d. He was paid nothing for haul. So far as we can gather from the findings, his bills were rendered at the rates at which they were paid, and the payments were received without any intimation that the amounts allowed were too small.

During the progress of the work the claimant had put macadam on the road by direction of one of the Board of Public Works. This was formally recognized as a part of his contract in November, 1873, and in December, 1873, the contract, No. 561, under which all the work was supposed to have been done, was formally executed.

The findings show that both parties intended to embody in this formal

Digitized by Google

instrument, and supposed they had embodied in it, all the agreements under which the one had been doing work and the other had been paying money. The instrument was antedated for the purpose, as the findings further show, of making it operative during the whole period of the work.

The claimant now, however, makes two objections to this instrument:

In the first place it was signed on behalf of the Board of Public Works by Henry D. Cooke, Alexander R. Shepherd, and James A. Magruder. Cooke was a member of the Board in October, 1872, when the contract with the claimant was actually made, but he had ceased to be a member in December, 1873, when the formal evidence of it was actually signed. Shepherd and Magruder were members throughout. The total number of the Board was five. The claimant maintains that the instrument, not having been signed by a majority of the Board, is invalid.

It is unnecessary for us to decide whether he is correct in this contention, for the findings show that the claimant signed that paper for the purpose of showing what his own understanding of the contract was. If, notwithstanding the written instrument, the contract still rested in parol, the court could have no stronger evidence to show what the claimant intended it to be. If, on the other hand, the written contract is valid, the practical result on the issues in this suit is the same.

In the second place, the claimant maintains that he engaged to do the work at Board rates; that when the written contract varied from Board rates by excluding haul, and paying masonry at only $5 a cubic yard, it was a variation made without his knowledge, and against the intent of both parties, and that these provisions of the contract having been inserted by mistake, the court should reform the contract by restoring Board rates as the measure of compensation.

This theory rests for its support upon: 1st. The letter of the secretary informing the claimant that a contract had been awarded him at Board rates. 2d. The testimony of the claimant that he supposed the rates stated in the written instrument were Board rates.

We have already seen that the letter of the secretary was not justified or authorized by the action of the Board. The claimant's contention therefore rests mainly upon his own unsupported testimony. On the other hand, it is contradicted by his own consistent conduct, from October, 1872, when he began work under the original contract, to January, 1876, when he finished under the last extension of the contract. During all this time he rendered accounts and received pay for masonry at $5, and for grading without claiming haul. We cannot shut our eyes to these practical acts of construction. We think that before he began work he must have known that the secretary had made a mistake. We are also of opinion that when he signed the contract, in December, 1873, he knew what its purport was, and that it expresses the agreement as he understood it.

Having disposed of this general question, we will take up the items of the claim and counter-claim in detail.

The claimant's bill of particulars consists of fourteen items, thirteen of which are in the original petition and one in the amended petition.

Four of these were abandoned at the trial, namely:

Digitized by Google

Stone excavation, 1661.53 cubic yards of haul as above, at 20.62½ cents per cubic yard $342.60
114 cubic yards of masonry, at $5 per cubic yard 570.00
Repairing road at above point 41.00
120 cubic yards of cobble-stone used by overseer of repairs, at 75 cents per cubic yard 90.00

The item 'Balance due on Conduit road, $325.67,' was amended at the trial, so as to make it a claim for a receiving basin, $71.25. We do not find this claim to be sustained.

There was also a claim made in the original petition for $33,679.53 for difference between the face value of certificates and the cash price for the work. In view of previous decisions, this claim was not pressed, and it is unsupported by proof.

There was also a claim set up in the original petition for $1328.47 for difference between the amount audited to the claimant and the amount paid to him. We have disposed of this by Finding XVIII, which states in substance that it is not sustained by proof.

We will take up the remaining items in classified chronological order, and consider them when pertinent to do so in connection with the counter-claims.

The following items stand by themselves and have no relation to the counter-claims:

33,232 cubic yards of haul 1650 feet over 200 feet, at .01¼ cents per hundred feet, = 20.62½ cents per cubic yard $6854.10
913.39 cubic yards of stone masonry, audited at $5 per cubic yard, which should have been at $6.50, the Board rates, making a difference of 1370.08

These claims are for work done before December, 1873, and are founded upon the alleged mistake as to the rates. For the reasons already given they cannot be allowed. The claimant received his contract price both for haul and masonry, and has no just claim to any further compensation for either.

The next series of claims grows out of an extension of contract No. 561 so as to cover the construction of an expensive wall on the south side of the Canal road and the completion of that road as a first-class road. It was made by the Commissioners after the abolition of the Board of Public Works, and was a much more extensive contract than the original.

Under this extension the claimant now makes the following claims, which are set forth in his original petition:

492 cubic yards coping, which should have been measured as stone masonry, at $5 per cubic yard $2460.00
4624 cubic yards of earth excavation necessary for foundation of retaining wall on Canal road, at 40 cents per cubic yard . . . 1849.60
4528 cubic yards of broken stone necessary for drainage back of retaining walls, at $4.50 per cubic yard 20,376.60

And the following in his amended petition:

5000 yards excavation for the purpose of constructing the lining in the rear of the retaining walls, at 40 cents per cubic yard . $2000.00

Digitized by Google

In this connection the defendant sets up the following items of counter-claim:

To overpayment, by mistake of fact, on account of stone masonry in canal wall in excess of amount required by contract, 4091.83 cubic yards, at $5		$20,459.15
To overpayment on account of coping, amount paid in mistake of fact	$9887.01	
Correct amount due	5320.68	
Excess overpaid		4566.33

To overpayment, by mistake of fact, for grading:

Amount paid—		
For excavation	$9665.40	
For haul	7893.41	
	$17,558.81	
Amount properly due	782.88	
Excess overpaid		$16,775.93

It will be observed that these claims and counter-claims relate to: 1st. The retaining wall; 2d. The foundation for it; 3d. The lining back of it for drainage; 4th. The coping on it; and, 5th. The grading of the road itself. We will consider them in that order.

1. *The wall.*—The claimant makes no demand on this account. The defendant asks judgment for a large sum for alleged overpayment. The facts are briefly these:

The wall was some three miles in length, and in some places as much as ten feet high. In the very outset the claimant varied from the plans and specifications by constructing it wider than they called for. He gave his reasons for these changes to the assistant engineers of the district and to the Commissioners, and they assented to the change. From time to time, during the work, measurements were taken and returned to the chief engineer, and passed upon by him and payments made in accordance with them; and all these measurements included the variations thus made. The Commissioners knew of it, and the reasons for it, and consented to it; the assistant engineers knew of it, and the engineer-in-chief might have known of it if he had paid personal attention to it. There was no attempt at concealment or fraud. When the final payment was made, which is now sought to be recovered back, it was done with the knowledge of the Commissioners, and by personal direction of one of them, and with the knowledge and consent of Assistant Engineer Oertly, who was acting as chief in the absence of Mr. Hoxie. The ground of the defendant's claim for repayment is that the engineer-in-chief did not assent to the changes which involved the construction of 4091.83 yards of masonry beyond his plans. We think this claim cannot be maintained.

The defendant further maintains that in any event there is an overmeasurement of 661 feet in this wall. In support of this contention it refers to a measurement made by McComb, on behalf of the defendant, which is

Digitized by Google

found to be less by that amount than Franklin's measurement, on which the payment was made.

McComb's testimony was given January 24, 1882. On the 21st October, 1882, the defendant called Franklin as a witness, and made no inquiry of him on this point, although he did inquire as to other mistakes. Under these circumstances we cannot set aside Franklin's measurement and find a payment made under it to have been made in mistake of fact.

2. *The foundation for the wall.* — The terms of the contract must govern our decision. It required the claimant to 'construct a stone retaining or parapet wall on the south side of the Little Falls road, between the Aqueduct and Chain Bridges, or at such points along said road as may be authorized by the Commissioners, at $5 per cubic yard. . . . The present retaining walls to be removed to such depth from the top as may be directed, and the foundation inspected and approved by the engineer of the District of Columbia before relaying the wall, which is to be done in cement mortar.'

A portion of the new wall was constructed in places where there was no old wall. It is admitted that the contract gives the claimant no claim for the labor in getting ready for the foundations in places where there was a previous wall. The claim is confined to excavation in places where there was no previous wall. The instrument extending the contract makes no other provision for payment except that already quoted. We are of opinion that it requires the claimant to do all the work necessary for the finished masonry at the agreed price of $5 unless there is something in the old instrument which gives him further pay for excavation.

Turning to that, we find these provisions only, 'Excavations and refilling, forty (40) cents per cubic yard, to be measured in excavation only,' and 'grading, thirty (30) cents for each and every cubic yard of earth, sand, or gravel excavated and hauled.'

It is plain that the provision in regard to grading does not apply to this case. We think it equally clear that the other does not. This is not a case of excavation and refilling, like a sewer trench; and the rate of payment agreed upon for such double work is not applicable to this.

There being nothing in the old contract to control the plain language of the extension, we must decide against the claimant on this item.

3. *The lining back of the wall for drainage.* — The specifications called for 'a lining of coarse gravel twelve (12″) inches in thickness carried up in rear of the retaining wall,' and the plans showed this in detail. There was no gravel along the line of the road, and it was mutually agreed, during the construction of the work, that macadam material should be substituted for the gravel.

The contract is silent as to the rate of pay for this work, which has been satisfactorily performed.

The defendant maintains that it was intended to be paid for by the price allowed for the masonry in the wall.

The claimant contends that he is entitled to compensation, 1st, for the labor in excavating the place for the reception of the lining at the rate allowed by the old contract for excavations and refilling; 2d, for the lining to be measured as masonry.

Digitized by Google

It is plain that this work of gravelling in the rear of the wall, as contemplated by the contract, was a work of considerable labor and expense. We cannot think that either party intended it to be paid for in computing the masonry. In our opinion it is a *casus omissus*. The parties have accidentally neglected to fix a price for this work.

The claimant has done the work; the District has received the benefit of it; and it only remains for the court to examine the findings and ascertain whether they furnish the means for fixing its value.

In Finding XXVI will be found the final measurement of the work done under this contract certified to by Mr. Bodfish, assistant engineer, and Mr. Oertly, assistant engineer for the lieutenant engineer. This measurement contains the following item: '4528 cubic yards of broken stone filling at $1.25, $5660, if allowed.'

The item was not allowed at that time. The court allows it now as the measure of the amount of such filling, and of its value, and in full for the demands in the claimant's petition and amended petition, on account of such filling, and of the excavation for it.

4. *The coping on the wall.* — The contract called for a 'coping to consist of selected stones six to ten inches thick, jointed; in length of not less than two feet, and must project over the parapet wall not less than two nor more than four inches on each side, and must be so disposed along the line of the wall that no two in juxtaposition shall vary in thickness nor in width more than three-quarters of an inch.'

After laying about a thousand feet of this coping the claimant wrote to the Commissioners that it was expensive, arduous, and unsatisfactory work to make such coping, and made a proposition in the following language: 'That I be allowed to use for the coping North River or other suitable coping stone, for which I will be allowed an extra compensation of forty (40) cents per foot. This stone will cost me, delivered on the ground, nearly (1) dollar per foot, but I am willing to bear more than one half the expense, only asking the District government to assume the proportion I have named.'

To this proposition Mr. Hoxie, on behalf of the District, made the following reply: 'You are requested to call at this office to execute the necessary papers for an extension to your contract, No. 561, with the late Board of Public Works, to include the finishing of the parapet wall along the Little Falls road with the North River coping, at forty cents per lineal foot, payable in 3.65 bonds at par.'

The claimant did not call and execute the proposed extension, but instead thereof went on with the proposed change, and the court is now called upon from this correspondence and the acts of the parties to decide what their agreements really were.

Assuming the average thickness of the coping called for by the contract to be 8 inches and its average width to be 30 inches, the contract price for it, viz., $5.00 per cubic yard, would amount to 30.8 cents per running foot.

The diminution in the size caused by using North River bluestone, taking Hoxie's measurements in Finding XXVIII, reduced the contract price for it, measured as masonry, to about 15.4 cents per running foot.

As some compensation for this reduction, as well as the increased cost

Digitized by Google

of the proposed change (estimated by the claimant at nearly $1.00 per foot), the claimant proposed that he should be allowed an extra compensation of 40 cents per foot.

He did not indicate whether he meant 40 cents per square foot or 40 cents per lineal foot. He now says that he intended square feet, and argues that the engineer must have so understood him, because any other construction would be inconsistent with the prices of bluestone.

Lieutenant Hoxie's answer may be construed in two ways: 1st, either as an acceptance of the claimant's proposition, defining the undefined term in it to be a lineal and not a square foot; or, 2d, as a counter-proposal of 40 cents a running foot as the entire compensation. We think the first construction the one most consistent with the facts in the case, and the one which gives force to the whole correspondence. It is also the only one consistent with the action of Lieutenant Hoxie at a subsequent stage, when he sanctioned a measurement of the work which contemplated an allowance to the claimant for the coping as masonry, and an additional payment by the foot.

When the parties came to settle after the work was done, both agreed that the claimant was entitled to be paid for the coping as masonry (which we have seen to be about 15.4 cents per running foot), and at as high a rate as 40 cents extra per lineal foot, or an aggregate of about 55.4 cents per running foot. The claimant contended that he was entitled to a gross allowance of 40 cents per square foot, which, allowing the coping to be two feet wide, would be 40 cents a running foot additional, or about 95.4 cents per running foot. The parties compromised by fixing upon a rate of 74½ cents a running foot. We cannot say that this payment was made in mistake of fact. We think that it was made and received as a settlement of a disputed item. Regarding it in this light, we can neither on the one hand set aside the payments already made to enable the defendant to recover on its counter-claim, nor can we on the other hand award to the claimant the contract price for the coping as masonry, since the claim for it, however well founded it may have been originally, entered into the settlement by which both parties accepted a rate of compensation which neither contemplated when the work was done.

5. *The grading of the road.*—The claimant demands nothing further for grading this road. The defendant asks to recover back $16,775.93, which it says was overpaid by mistake of fact for excavation and for haul in grading.

In the final measurement of the work by Mr. Oertly, in January, 1876, which is set forth in Finding XXVI, the claimant was allowed for 32,218 cubic yards of grading and for a similar amount of haul. The material in these two items was the same.

The defendant first contends that 15,185.82 cubic yards of this material was wrongfully allowed by mistake as grading and haul, because, it says, it was allowed and paid for as macadam, and constituted a part of the 45,557.47 square yards of macadam measured and allowed in the same measurement. The court has in Finding XXIX found this to be so.

The defendant further contends that 14,422 cubic yards of the grading and haul allowed in said measurement was in fact filling under the gutters,

Digitized by Google

which by the extension of the contract was to be done without charge. As to this the court has found that it does not appear that there was any mistake of fact in that measurement.

The result is that the court allows the defendant for one payment by mistake of fact—

For 15,185.82 cubic yards grading, at 30 cents	$4555.75
For 15,185.82 cubic yards haul, at 24½ cents	3720.53
	$8276.28

The next items in consecutive order relate to what is known as the New Cut road, a road near to and connected with the Canal (or Little Falls) road, on which the claimant was at work in August, 1875.

It appears that this New Cut road was badly damaged by storms in that month. The three years' experience which the District authorities had had at that time with the claimant as a contractor appears to have inspired confidence, and in the emergency Mr. Hoxie addressed the following letter, on the 31st August, to the claimant:

'You are authorized to repair the roads and culverts in the vicinity of the work now being performed by you along the Little Falls road which have been damaged by the late storms, as extra work under your contract No. 561 with the late Board of Public Works. You will present this order with your bill for the work, which will be done under the direction of Mr. Cunningham and Mr. Carroll, overseers.'

No answer was made to this communication, but as the claimant at once went on with the work he must be presumed to have accepted the proposal.

In December he rendered an itemized bill, amounting in the aggregate to over $15,000, and asked for measurement and payment under his contract. This contract called for payment in cash. The defendant had no cash. Under direction of the Commissioners a bill was made out and certified to at rates which produced an aggregate that would make a payment in certificates equivalent to a payment of the bill rendered in cash, and the claimant was so paid in certificates.

We do not apprehend that there was anything immoral or intrinsically dishonest in this transaction. The parties assumed what was a manifest fact, that work to be paid for in depreciated securities was nominally worth higher rates than work to be paid for in cash. But the act was clearly illegal. The defendant having agreed to pay cash, was legally bound to pay cash; but when it found itself unable to do so, the law forbade it from parting with its securities to a creditor at less than par. It is too clear for argument that what it did was an attempt to do indirectly what the law forbade it to do directly, which a familiar rule of law makes an impossibility.

This payment in certificates to the amount of $22,182.92 must therefore be taken to be a cash payment to that amount on account of the work done on the New Cut road. It is the only payment that has been made on that account. Our labors in this respect are, therefore, now reduced to ascertaining the amount of the work done by the claimant on that road.

On the 14th December, 1876, Lieutenant Hoxie addressed to the Commissioners a letter in which he said: 'I transmit herewith final measure-

Digitized by Google

ment of work done on New Cut road by J. J. Shipman, under contract No. 561 of the late Board of Public Works, amounting to $24,352.29.'

The measurements inclosed in this letter show the following apparent variations from contract rates: An allowance of $6.50 for masonry, and an allowance for haul. The counsel for the defendant ask us to strike these items from the measurement.

These measurements were made after the present controversy arose, and undoubtedly express Lieutenant Hoxie's well-considered judgment as to the claimant's rights. There may have been good reason for allowing the haul, and the masonry may have been of a different quality from the rubble cement, for which the contract fixes the price at $5. We are not disposed to assume the responsibility of changing these items.

Among the items included in this measurement were 1090.8 perches of dry wall. The contract fixes no price for such labor and material. Lieutenant Hoxie estimates it to be worth $2.50 per perch, and allows that rate. The claimant contends that it is worth more than that, and introduced considerable proof to sustain his contention. We have reached the conclusion that the rate allowed by Lieutenant Hoxie is below the prices paid for such wall at the time of its construction, and have found that it was worth $3.50 per perch instead of $2.50, as allowed.

As the result of this we disallow the counter-claim on account of the work on the New Cut road, and allow the claimant as follows:

Work done as by Hoxie's estimate	$24,352.50
1098.8 perches dry wall, $1 per perch additional	1,098.80
	$25,451.30
Less payments in certificates at par	22,182.92
	$3,268.38

The judgment of the court is as follows:

The court orders, adjudges, and decrees that the contract between the claimant and the defendant referred to in claimant's petition as contract No. 561 correctly and truly sets forth the understanding and intention of the parties, and has not by accident, inadvertence, mistake, or clerical error failed to set forth the same, and ought not to be reformed.

And the court further orders, adjudges, and decrees that the claimant has established the following items of claim against the defendant set forth in his petition or the several amendments thereto, to wit:

A claim on account of 4528 cubic yards of broken stone for drainage back of retaining walls, at $1.25 per cubic yard	$5660.00
A claim on account of balance due for work on the New Cut road,	3268.38
Making a total of	$8928.38

And has failed to establish the residue of the claims set forth in said petition and amendments.

And the court further orders, adjudges, and decrees that the defendant has established the following items of counter-claim against the claimant, to wit:

Digitized by Google

Overpayment by mistake of fact for 15,185.82 cubic yards of grading on the Canal road, at 30 cents per cubic yard	$4555.75
Overpayment by mistake of fact for 15,185.82 cubic yards of haul on said Canal road, at 24½ cents per cubic yard	3720.52
Making a total of	$8276.27

And has failed to establish the residue of the counter-claims set forth in its bill of particulars.

And the court further orders, adjudges, and decrees that the claimant shall have and recover of the defendant the sum of $652.11, as due and payable on the 1st of January, 1876, being the difference between the said amount of claim allowed to the claimant and the said amount of counter-claim allowed to the defendant.

And the court further orders, adjudges, and decrees that except as to the said amount of claims so allowed to the claimant, all the claims demanded in the claimant's petition and the amendments thereto be disallowed, and the petition with reference to all the disallowed claims be dismissed.

And, further, that except as to the said amount of counter-claims so allowed to the defendant the defendant's counter-claims be dismissed.

Digitized by Google

INDEX.

ACTION.

See LOCAL LAW, 6, 7, 8;
PAYMENT.

ACTION ON THE CASE.

See MASTER AND SERVANT.

ADMIRALTY.

A fixed structure, contrived for the purpose of taking ships out of the water in order to repair them, and for no other purpose, consisting of a large oblong box, with a flat bottom and perpendicular sides, with no means of propulsion either by wind, steam, or otherwise, and not designed for navigation, but only as a floating dry dock, permanently moored, is not a subject of salvage service. *Cope* v. *Valette Dry Dock Co.*, 625.

See JURISDICTION, C, 1, 2;
LOCAL LAW, 8, 9, 10.

ALIEN.

See LOCAL LAW, 1.

AMENDMENT.

When the judgment of the court below is reversed by reason of failure of the pleadings to show the citizenship necessary to give jurisdiction, it is within the discretion of that court, on the case coming back, to allow amendments to cure the defect. *Halsted* v. *Buster*, 341.

APPEAL.

See COSTS;
COURT OF CLAIMS;
JURISDICTION, A, 1, 3, 8.

ASYLUM.

See EXTRADITION, 7.

ATTORNEY AT LAW.

See BANKRUPTCY, 2;
WITNESS.

Digitized by Google

BAILMENT.

1. The robbery by burglars of securities deposited for safe-keeping in the vaults of a bank is no proof of negligence on the part of the bank. *Wylie* v. *Northampton Bank*, 361.
2. It is competent for a national bank to take steps for the recovery of its property stolen by burglars, and to agree to take like steps for the recovery of the property of others deposited with it for safe-keeping and stolen at the same time; and want of proper diligence, skill, and care in performing such an undertaking is ground of liability to respond in damages for failure: but the evidence in this case failed to establish either such an agreement, or the want of diligence and care, and the jury was properly instructed to return a verdict for defendant. *Ib.*

BANKRUPTCY.

1. *Hennequin* v. *Clews*, 111 U. S. 676, affirmed and followed, in holding, on similar facts in this case, that there was no such fraud in the creation of the debt, and no such trust in respect to the possession of the bonds, as to bar the operation of the discharge in bankruptcy. *Palmer* v. *Hussey*, 96.
2. A, being defendant in a suit in a state court to set aside a deed of real estate, employed B as attorney and counsel to defend the suit. While the suit was pending A conveyed the tract to C as trustee to secure certain debts and liabilities of A. A became bankrupt, and D was appointed his assignee. After all these proceedings B succeeded in obtaining a decree establishing A's title in the tract, which decree recited that the assignee in bankruptcy had become a party to the decree, and that the cause was remanded by consent for a report as to what was a reasonable counsel fee for B, which was declared to be a lien on the premises. After report the property was sold to B to satisfy that lien. In an action to enforce the lien under the trust deed to C as superior to that of B; *Held:* (1) That the state court had jurisdiction so as to bind those who were parties to the suit and those whom the parties in law represented; (2) that the assignee in bankruptcy having appeared in the state court and litigated his rights there, he and those whom he represented were bound by the decree. *Winchester* v. *Heiskell*, 450.

See EQUITY, 4.

BILLS OF EXCHANGE.

1. The acceptor of a bill of exchange discounted by a bank, with a bill of lading attached which the acceptor and the bank regard as genuine at the time of the acceptance, but which turns out to be a forgery, is bound to pay the bill to the bank at maturity. *Goetz* v. *Bank of Kansas City*, 551.

Digitized by Google

2. The bad faith in the taker of negotiable paper which will defeat a recovery by him must be something more than a failure to inquire into the consideration upon which it was made or accepted, because of rumors or general reputation as to the bad character of the maker or drawer. *Ib.*

See EVIDENCE, 9, 11;
LIS PENDENS;
PAYMENT.

BILLS OF LADING.

See BILLS OF EXCHANGE, 1;
EVIDENCE, 9, 11.

BOND.

In a bond "in the penal sum of $10,000, liquidated damages," with condition that certain third persons shall within a year release the obligee from a large number of debts held by them severally, and varying from $8000 to $10 each, the sum of $10,000 is a penalty, and not liquidated damages; and in an action thereon the obligee, upon proof that none of those debts were released by the holders within the year, but that immediately afterwards he was discharged from all of them in bankruptcy, can recover nominal damages only. *Brignall* v. *Gould*, 495.

BURGLARY.

See BAILMENT.

CALIFORNIA SCHOOL LANDS.

See PUBLIC LAND, 8, 9, 10.

CASES AFFIRMED.

1. *Ames* v. *Kansas*, 111 U. S. 449, affirmed. *Germania Ins. Co.* v. *Wisconsin*, 473.
2. *Barney* v. *Latham*, 103 U. S. 258, affirmed. *Brooks* v. *Clark*, 502.
3. *Cardwell* v. *American Bridge Co.*, 113 U. S. 205, affirmed and applied. *Hamilton* v. *Vicksburg &c. Railroad*, 280; *Huse* v. *Glover*, 543.
4. *Escanaba Co.* v. *Chicago*, 107 U. S. 678, affirmed and applied. *Hamilton* v. *Vicksburg &c. Railroad*, 278; *Huse* v. *Glover*, 543.
5. *Hancock* v. *Holbrook*, 112 U. S. 229, followed. *Peper* v. *Fordyce*, 469.
6. *Hastings* v. *Jackson*, 112 U. S. 233, affirmed. *Mace* v. *Merrill*, 581.
7. *Hennequin* v. *Clews*, affirmed and followed. *Palmer* v. *Hussey*, 96.
8. *Looney* v. *District of Columbia*, 113 U. S. 258, affirmed. *Donnelly* v. *District of Columbia*, 339.
9. *Mahn* v. *Harwood*, 112 U. S. 354, affirmed. *Ives* v. *Sargent*, 652.
10. *Martin* v. *People*, 87 Ill. 524, followed. *Enfield* v. *Jordan*, 680.
11. *Mansfield &c. Railway* v. *Swann*, 111 U. S. 379, affirmed. *Peper* v. *Fordyce*, 469.
12. *Putnam* v. *Ingraham*, 114 U. S. 257, affirmed. *Brooks* v. *Clark*, 502.
13. *Shepard* v. *Carrigan*, 116 U. S. 593, affirmed. *Sutter* v. *Robinson*, 530.

Digitized by Google

14. *Starin* v. *New York*, 115 U. S. 218, affirmed. *Germania Ins. Co.* v. *Wisconsin*, 473.
15. *Thayer* v. *Life Association*, 112 U. S. 117, affirmed. *Peper* v. *Fordyce*, 469.
16. *Thomson* v. *Wooster*, 114 U. S. 104, affirmed. *Clark* v. *Wooster*, 322.
17. *Wollensak* v. *Reiher*, 115 U. S. 96, affirmed and applied. *Ives* v. *Sargent*, 652.

CASES DISTINGUISHED.

1. *Anderson County* v. *Beal*, 113 U. S. 227, distinguished. *Crow* v. *Oxford*, 215.
2. *Commissioners* v. *January*, 94 U. S. 202, distinguished. *Crow* v. *Oxford*, 215.
3. *Lewis* v. *Commissioners*, 105 U. S. 739, distinguished. *Crow* v. *Oxford*, 215.
4. *National Bank* v. *Commonwealth*, 9 Wall. 353, distinguished. *New Orleans* v. *Houston*, 265.
5. *Stone* v. *Mississippi*, 101 U. S. 814, distinguished. *New Orleans* v. *Houston*, 265.
6. *United States* v. *Railroad Co.*, 17 Wall. 322, distinguished. *New Orleans* v. *Houston*, 263.
7. *Yulee* v. *Vose*, 99 U. S. 539, distinguished. *Brooks* v. *Clark*, 502.

CASES OVERRULED.

Welch v. *Post*, 99 Ill. 471, overruled. *Enfield* v. *Jordan*, 680.

CERTIFICATE OF DIVISION.

See DIVISION OF OPINION.

CHOCTAWS.

See INDIAN.

CITIZENSHIP.

See AMENDMENT;
JURISDICTION, B, 2; C, 3, 5.

COLLECTOR OF CUSTOMS.

A collector of customs is not authorized by the provisions of the act of June 10, 1880, c. 202, 21 Stat. 173 to collect the freight upon the transported goods, or to receive it for the lien-holder; and if a deputy collector, who acts as cashier of the collector, does so collect or receive the freight, his act is an unofficial act which entails no official responsibility upon the collector, his superior. *Cleveland & Columbus Railroad* v. *McClung*, 454.

CONFLICT OF LAW.

When the statutes of the United States make special provisions as to the competency or admissibility of testimony, they must be followed in the courts of the United States, and not the laws or practice of the state in which the court is held, when they are different. *Whitford* v. *Clark County*, 522.

Digitized by Google

CONSTITUTIONAL LAW.

A. Of the United States.

1. A Pennsylvania fire insurance corporation began doing business in New York in 1872, and continued it afterwards till 1882, receiving from year to year certificates of authority from the proper officer, under a statute of New York passed in 1853. Chapter 694 of the laws of New York of 1865, as amended by c. 60 of the laws of 1875, provided that whenever the laws of any other state should require from a New York fire insurance company a greater license fee than the laws of New York should then require from the fire insurance companies of such other state, all such companies of such other state should pay in New York a license fee equal to that imposed by such other state on New York companies. In 1873, Pennsylvania passed a law requiring from every insurance company of another state, as a prerequisite to a certificate of authority, a yearly tax of 3 per cent. on the premiums received by it in Pennsylvania during the preceding year. In 1882, the insurance officer of New York required the Pennsylvania corporation to pay, as a license fee, a tax of 3 per cent. on the premiums received by it in New York in 1881. In a suit against such corporation, in a court of New York, to recover such tax, it was set up as a defence, that the tax was unlawful, because the corporation was a "person" within the "jurisdiction" of New York, and "the equal protection of the laws" had been denied to it, in violation of a clause in the Fourteenth Amendment to the Constitution of the United States. On a writ of error to review the judgment of the highest court of New York, overruling such defence; *Held:* That such clause had no application, because the defendant, being a foreign corporation, was not within the jurisdiction of New York, until admitted by the state on a compliance with the condition of admission imposed, namely, the payment of the tax required as a license fee. *Philadelphia Fire Association* v. *New York*, 110.

2. The business carried on by the corporation in New York, referred to in the preceding paragraph, was not a transaction of commerce. *Ib.*

3. The state of New York by statute imposed a tax upon the "corporate franchise or business" of corporations within the state, of one quarter mill upon the capital stock for each one per cent. of dividend of six per cent. or over. The Home Insurance Company claimed exemption from this tax upon so much of its capital as was invested in bonds of the United States which, by the acts of Congress under which they were issued, were exempt from state taxation. In a proceeding to enforce the collection of the tax, the Supreme Court of New York gave judgment for its recovery, which judgment was affirmed by the Court of Appeals of that state. This court affirms the judgment by a divided court. *Home Insurance Co.* v. *New York*, 129.

4. A commenced a proceeding in equity in a District Court of Iowa against B for violating the provisions of §§ 1540, 1542 of the Code of that

Digitized by Google

state respecting the sale of intoxicating liquors, and the owning and keeping such liquors with intent to sell the same. B filed his petition, alleging that by these proceedings and by the construction given to the statute by the Supreme Court of Iowa in another case, he was deprived of his rights under the Constitution and laws of the United States, and praying for the removal of the cause to the Circuit Court of the United States; and it was so removed. In that court A filed an amended complaint, and B filed an amended petition for removal; each by leave of court. A moved that the cause be remanded to the state court. The Circuit Court remanded it, from which order B appealed. This court affirms the decree of the court below by a divided court. *Schmidt* v. *Cobb*, 284.

5. A "duty of tonnage," within the meaning of the Constitution, is a charge upon a vessel, according to its tonnage, as an instrument of commerce, for entering or leaving a port, or navigating the public waters of the country. *Huse* v. *Glover*, 543.

6. The constitutional requirement that "full faith and credit shall be given in each state to the public acts, records, and judicial proceedings of every other state" implies that the public acts of every state shall be given the same effect by the courts of another state that they have by law and usage at home. *Chicago & Alton Railroad* v. *Wiggins Ferry Co.*, 615.

See CORPORATION, 4;
EVIDENCE, 14;
EXTRADITION, 2, 4, 6;
JUDGMENT, 2 (4);
JURISDICTION, A, 12;
LOCAL LAW, 7, 8;
NAVIGABLE STREAM, 2;
PUBLIC LAND, 13, 14.

B. OF THE STATES.

See CORPORATION, 1, 2;
LOCAL LAW, 7;
MUNICIPAL CORPORATIONS, 2.

CONTRACT.

1. In October, 1872, the secretary of the Board of Public Works of the District of Columbia wrote to the claimant that the Board had awarded him a contract at Board rates. The Board had, in fact, awarded a contract, but had not fixed rates. The claimant, after seeing the engineer of the district, went to work in 1872, and rendered bills from time to time, and was paid at less rates than Board rates. In 1873 he resumed work, and rendered bills from time to time, and was paid at the same rates as in 1872. The claimant having done a quantity of Macadam pavement on the work which was not called for by the agreement, the district recognized it and paid him for it. The Board of Public Works in 1872 ordered claimant's contract to be reduced to writing, but it was not reduced to writing and signed until December, 1873, when it was signed by Cooke, Shepherd, and Magru-

Digitized by Google

der on behalf of the Board. Cooke was a member in 1873, but had ceased to be one before December, 1873. The contract as signed corresponded in rates with the bills as rendered and paid, and they were not Board rates. Claimant contended that the contract, by reason of mutual mistakes, varied from the intent of the parties, and that the rates of payment should have been Board rates, and asked the court, as a Court of Equity, to reform it. *Held:* That the practical construction given by both parties showed that there was no mistake; that the contract, as signed, expressed the will of the parties; that when signed it related back to the work done previous to signature; and that it was immaterial whether it was valid as a contract, since, if invalid, it was still evidence of the intention of the parties. *Shipman* v. *District of Columbia*, 148, 703.

2. In 1874 the contract was renewed and extended so as to take in a much larger work. The claimant constructed a wall which contained more cubic yards of masonry than the plans of the engineer of the district called for. It appeared that this was done with the knowledge of the commissioners and of the assistant engineer, and that there was no concealment, and that it might have been known to the chief engineer. *Held:* That money paid for this, amounting to $20,459.19, could not be recovered back on a counter-claim alleging it to have been paid under a mistake of fact. *Ib.*

3. The contract called for the construction of the wall at five dollars per cubic yard, and said nothing about excavations for it. *Held:* That the claimant was bound to make the excavations for the wall without extra pay for it. *Ib.*

4. The contract called for a lining of coarse gravel in the rear of the retaining wall and made no provision for payment. There was no gravel near the work. *Held:* That the claimant was entitled to compensation for this work. *Ib.*

5. The contract called for a coping of ordinary stone on the wall. By agreement of parties North River bluestone was substituted at an extra compensation of forty cents per foot. Claimant contended that this was per square foot; defendant, that it was per running foot. Claimant contended further that he was entitled to be paid for the coping as masonry. Defendant did not deny this. Defendant paid an arbitrary rate of seventy-four and one half cents per running foot, which claimant accepted. *Held:* That this was a settlement of that part of the dispute, and that claimant could not recover for the coping as masonry in addition. *Ib.*

6. Claimant under an extension of the contract did work on another road. His work was measured, and a bill aggregating about $15,000 was rendered. The commissioners made out a new bill, fixing the rates so as to produce an aggregate of about $22,000, in order to make a payment in bonds of the district equivalent to a payment in cash, and paid the bill so made in bonds. *Held:* That a payment of a claim

Digitized by Google

against the district in its bonds at less than par was illegal; that this was an attempt to do indirectly what could not be done directly; and that in stating an account it must be treated as a cash payment of the face of the bonds. *Ib.*

7 A reply to an offer of sale, purporting to accept it on terms varying from those offered, is a rejection of the offer and leaves it no longer open. *Minneapolis &c. Railway* v. *Columbia Rolling Mill*, 149.

8. On December 8, A offered to sell to B 2000 to 5000 tons of iron rails on certain terms specified, adding that if the offer was accepted A would expect to be notified prior to December 20. On December 16, B replied, directing A to enter an order for 1200 tons, "as per your favor of the 8th." On December 18, A declined to fulfil B's order. *Held:* That the negotiation between the parties was closed, and that an acceptance by B on December 19 of the original offer did not bind A. *Ib.*

9. In this case, the court construed the language of a written contract for supplying materials and labor in constructing water works for the city of Fort Wayne, Indiana, in regard to extra work, and an increase in the quantity of work, caused by an alteration of plan; and in regard to defects in material, furnished by the city, causing delay and expense to the contractor; and reversed the judgment of the Circuit Court because of an erroneous construction by it of such language. *Wood* v. *Fort Wayne*, 312.

10. A, having received from B an order for goods, declined to comply with it on the ground that he was not sufficiently advised of B's responsibility. B thereupon procured from C a writing stating that C was acquainted with B, indorsed him as an honest, capable business man deserving of credit, and would satisfy all his orders that spring. B delivered this to A. A thereupon notified B that the guaranty was accepted and forwarded the goods. B having failed to pay his notes given for them, A sued on the letter of credit. C defended by setting up the original order given by B as part of and explanatory of the credit. The court below held that the letter of credit was complete and could not be changed by importing into it the previous order. This court sustains that ruling. *Gilbert* v. *Moline Plough Co.*, 491.

11. On the facts in this case as stated in the opinion of the court; *Held:* That the jury would not have been warranted in drawing the conclusion of fact from the evidence that there was such an agreement as that sued on; that the relation of the parties was not such as, in contemplation of law, to give rise to such liability; and that there was no error in the instruction of the court below to find a verdict for defendant. *Eldred* v. *Bell Telephone Co.*, 513.

12. On the facts in this case as stated in the opinion of the court; *Held:* That it was no error in the court below to direct the jury to find a verdict for defendant. *Hubbard* v. *Investment Co.*, 696.

See BAILMENT, 2;
INSURANCE.

Digitized by Google

CORPORATION.

1. It is within the power of a legislature which creates a corporation and grants franchises to it, to authorize it to sell those franchises. *Willamette Co.* v. *Bank of British Columbia*, 191.

2. A corporation which is authorized to sell its franchises is authorized to mortgage them. *Ib.*

3. A statute which confers upon a corporation the right to take water from a river and to conduct it through canals, and the exclusive right to the hydraulic powers and privileges created by the water, and the right to use, rent, or sell the same or any portion thereof, authorizes the corporation to mortgage such powers and privileges. *Ib.*

4. A grant in the constitution of a State of a privilege to a corporation is not subject to repeal or change by the legislature of the state. *New Orleans* v. *Houston*, 265.

5. An assessment of a tax upon the shares of shareholders in a corporation appearing upon the books of the company, which the company is required to pay irrespective of any dividends or profits payable to the shareholder, out of which it might repay itself, is substantially a tax upon the corporation itself. *Ib.*

6. The Erie Railway Company, being embarrassed and in the hands of a receiver, appointed in a suit for the foreclosure of two of the mortgages upon the property of the company, its creditors and its shareholders, preferred and common, entered into an agreement for the reorganization of the company, to be accomplished by means of a foreclosure. Among other things it was agreed that there should be issued "preferred stock, to an amount equal to the preferred stock of the Erie Railway Company now outstanding, to wit, eighty five thousand three hundred and sixty nine shares, of the nominal amount of one hundred dollars each, entitling the holders to non-cumulative dividends, at the rate of six per cent. per annum, in preference to the payment of any dividend on the common stock, but dependent on the profits of each particular year as declared by the board of directors." The mortgage was foreclosed, and a new company was organized, and the new preferred stock was issued as agreed. The directors of the new company reported to its share and bond holders that during and for the year ending September 30, 1880, the operations of the road left a net profit of $1,790,620.71, which had been applied to making a double track, and other improvements on the property of the company. A, a preferred stockholder, on behalf of himself and other holders, filed a bill in equity to compel the company to pay a dividend to the holders of preferred stock. *Held:* That while the preferred stockholders are entitled to a six per cent. dividend in advance of the common stockholders, they are not entitled, as of right, to dividends, payable out of the net profits accruing in any particular year, unless the directors declare or ought to declare a dividend payable out of such profits; and that whether a dividend should be declared in any year, is a matter

Digitized by Google

belonging in the first instance to the directors to determine, with reference to the condition of the company's property and affairs as a whole. *N. Y., Lake Erie, & Western Railroad* v. *Nickals*, 296.

7. Where the charter of a corporation authorizes capital stock to be paid for in property, and the shareholders honestly and in good faith pay for their subscriptions to shares in property instead of money, third parties have no ground of complaint. *Coit* v. *Gold Amalgamating Co.*, 343.

See EQUITY, 5;
EVIDENCE, 3.

COSTS.

1. When a decree or judgment of a Circuit Court is reversed for want of jurisdiction in that court, this court will make such order in respect to the costs of appeal as justice and right may seem to require. *Peper* v. *Fordyce*, 469.

COURT AND JURY.

1. The submission of a question of law to the jury is no ground of exception if they decide it aright. *Minneapolis, &c., Railway* v. *Columbus Rolling Mill*, 149.

2. A having applied for a patent for a placer mine in Montana, B filed an adverse claim in the register's office under the provisions of Rev. Stat. § 2325, and commenced suit for the settlement of the controversy in the District Court of the territory according to the provisions of Rev. Stat. § 2326. In the course of the trial, it appeared that, before the commencement of the suit, B had agreed with C, by a sufficient instrument under seal, to convey the premises in dispute to C "by good and sufficient deed of conveyance duly acknowledged," and that C was in possession when the suit was begun and still remained in possession. The Code of Montana provides that "an action may be brought by any person in possession, by himself or his tenant of real property, against any person who claims an estate or interest therein adverse to him, for the purpose of determining such adverse claim, estate, or interest." The court ordered a non-suit, which judgment was affirmed by the Supreme Court of the territory. This court reverses the judgment of the court below, and holds that C was holding under B, and that B was bound to C to have the title quieted so as to give him a good and sufficient deed of the property, and had a right to have the verdict of the jury on the questions of fact at issue. *Wolverton* v. *Nichols*, 485.

COURT OF CLAIMS.

An appeal from a judgment of the Court of Claims, taken before the right of appeal has expired, is not vacated by the appropriation by Congress

Digitized by Google

of the amount necessary to pay the judgment. *United States* v. *Jones*, 477.

See JURISDICTION, A, 8.

COVENANT.

See DEED, 3.

DAMAGES.

1. Whenever the exercise of a right, conferred by law for the benefit of the public, is attended with temporary inconvenience to private parties, in common with the public in general, they are not entitled to damages therefor. *Hamilton* v. *Vicksburg, &c., Railroad*, 280.
2. A railroad company was authorized by the legislature of Louisiana to construct a railroad across that state, and as part of such road to construct necessary bridges for crossing navigable streams. The act made no provision for the form or character of such structures. A bridge across a navigable stream was constructed with a draw. In process of time it became decayed, and defendant in error, having succeeded to the rights of the company, employed a contractor to construct a new bridge in its place, the work to be done at a time of the year when it would least obstruct navigation. The contractor complied with his contract as to the time; but owing to unusual rains the river continued navigable, and the work was unavoidably prolonged, thereby obstructing its navigation and preventing the vessels of plaintiff in error from passing beyond the bridge. *Held:* That this was a case of *damnum absque injuriâ*. *Ib.*

See BOND.

DECEIT.

See EQUITY, 2.

DEED.

1. The grantor in a deed and all the subscribing witnesses being residents in a foreign country, proof of its execution by proof of the handwriting of the subscribing witnesses *held* sufficient. *Hanrick* v. *Patrick*, 156.
2. An unnoted erasure in a deed changing the name of the grantee from Elizabeth to Eliza may be explained by proof that Elizabeth and Eliza are identical and the same person. *Ib.*
3. A covenant of general warranty in a deed of "all the right, title, and interest" of the grantor in the premises described does not estop him from asserting a subsequently acquired title thereto. *Ib.*

See LOCAL LAW, 3.

DEPOSITION.

See EVIDENCE, 8.

Digitized by Google

DIVISION OF OPINION.

1. Each question certified to this court upon a division of opinion of the judges in the Circuit Court must be a distinct point of law, clearly stated, and not the whole case, nor whether upon the evidence judgment should be for one party or for the other. *Williamsport Bank* v. *Knapp*, 357.
2. When a question in a certificate of division is stated in broad and indefinite terms, which admit of one answer under one set of circumstances, and of a different answer under another set of circumstances, this court must regard it as immaterial to the decision of the case. *Enfield* v. *Jordan*, 680.

EQUITY.

1. A court of equity of the United States will not sustain a bill in equity, in a case of fraud, to obtain only a decree for the payment of money by way of damages, when the like amount might be recovered in an action at law. *Buzard* v. *Houston*, 347.
2. A bill in equity alleged that the defendant, after agreeing in writing to sell to the plaintiff a certain number of cattle at a specified price, induced him to surrender the agreement, and to receive instead thereof an assignment from the defendant of a similar contract of a third person with him, and also to pay the defendant a sum of money, and to give an obligation to pay him another sum, by false and fraudulent representations as to the solvency of that person; and prayed for a cancellation of the aforesaid assignment and obligation, for a reinstatement and confirmation of the original agreements, and its enforcement on such terms as the court might direct, or else for a repayment of the sum paid, and for damages, and for further relief. *Held*: That the bill showed no case for relief in equity, because an action of deceit would afford a full, adequate, and complete remedy. *Ib.*
3. If a bill in equity, showing ground for legal and not for equitable relief, prays for a discovery, as incidental only to the relief sought, and the answer discloses nothing, but the plaintiff supports the claim by independent evidence, the bill must be dismissed, without prejudice to an action at law. *Ib.*
4. A bill in equity by an assignee in bankruptcy against the bankrupt and another person, alleging that the bankrupt, with intent to defraud his creditors, concealed and sold his property, and that he invested the proceeds in a business carried on by him in the name of the other defendant, should, upon a failure to prove the latter allegation, be dismissed, without prejudice to an action at law against the bankrupt. *Kramer* v. *Cohn*, 355.
5. A transfer of shares in a corporation, procured from the owner while so intoxicated as to be incapable of transacting business, by fraud, with knowledge of his condition, and for a grossly inadequate consideration, will be set aside in equity; and if, without any fault of his,

Digitized by Google

he is unable to restore the consideration, provision for its repayment may be made in the final decree. *Thackrah* v. *Haas*, 499.

6. In the courts of the United States, as legal defences only can be interposed to legal actions, a defendant who has equitable grounds for relief against a plaintiff must seek to enforce them by a separate suit in equity; and this rule prevails in states where the law and practice permit the defendant in an action at law to set up a legal as well as an equitable defence. *Northern Pacific Railroad* v. *Paine*, 561.

7. A mere equitable claim, which a court of equity may enforce, will not sustain an action at law for the recovery of land or of anything severed from it. *Ib.*

See JURISDICTION, A, 10;
PATENT FOR INVENTION, 4, 6, 7.

ERROR.

See EVIDENCE, 7, 13.

ESTOPPEL.

See DEED, 3;
JUDGMENT, 2 (1) (2);
LIS PENDENS.

EVIDENCE.

1. In an action against a railroad company by a passenger to recover for injuries received by an accident to a train, a written statement as to the nature and extent of his injuries, made by his physician while treating him for them, for the purpose of giving information to others in regard to them, is not admissible in evidence against the company, even when attached to a deposition of the physician in which he swears that it was written by him, and that in his opinion it correctly states the condition of the patient at the time referred to. *Vicksburg & Meridian Railroad* v. *O'Brien*, 99.

2. The declaration of the engineer of the locomotive of a train which meets with an accident, as to the speed at which the train was running when the accident happened, made between ten and thirty minutes after the accident occurred, is not admissible in evidence against the company in an action by a passenger on the train to recover damages for injuries caused by the accident. *Ib.*

3. A gross and obvious overvaluation of property conveyed to a corporation in consideration of an issue of stock at the valuation, is strong evidence of fraud in an action against a stockholder by a creditor to enforce personal liability for his debt. *Coit* v. *Gold Amalgamating Co.*, 343.

4. A statute of Missouri authorized United States patents for lands within the state to be recorded, and provided that a certified copy of the

Digitized by Google

patent should be received as *prima facie* evidence of the contents of the patent. In the record of a patent recorded under the provisions of this act, it appeared that there was a seal in due form, and that the instrument was perfect in every respect. No seal appeared in the record of the same patent in the General Land Office in Washington. The original patent not being in the possession or under the control of either party to the action; *Held*: That the presumption of law is that all that is found in either copy was in the original; that any important matter found in one which was not in the other was due to an accidental omission; and, that the *prima facie* case made by the record from Missouri was not overcome by the record from the General Land Office. *Campbell* v. *Laclede Gas Co.*, 445.

5. Section 891 of the Revised Statutes providing that authenticated copies of records in the General Land Office shall be "evidence equally with the originals thereof" does not mean that in all cases the copy should have the same probative force as the original instrument, but that it should be regarded as of the same class, in the grades of evidence, as to written or parol, and primary and secondary. *Ib.*
6. Whether a letter-press copy can always be introduced in place of the original, *quære*. *Gilbert* v. *Moline Plough Co.*, 491.
7. When the introduction of a letter in evidence is immaterial and works no prejudice to the objecting party, this court will not reverse a judgment for that cause only. *Ib.*
8. When a witness, whose deposition is taken *de bene esse*, under § 863, Rev. Stat., lives more than one hundred miles distant from the place of trial when the deposition is taken, it will be presumed that he continues to live there at the time of trial, and no further proof on that subject need be offered by the party offering the deposition unless this presumption is overcome by proof from the other side; but if it be overcome, and the party offering the deposition has knowledge of his power to get the witness in time to secure an attendance at the trial, the deposition will be excluded. This rule does not apply to depositions taken under § 866. *Whitford* v. *Clark County*, 522.
9. In an action against the acceptor of a bill of exchange, with alleged fictitious bills of lading attached, articles from newspapers touching the drawer's conduct in drawing other drafts with like bills attached were properly excluded as having no connection with the transaction in controversy, it not appearing that the acceptor ever saw them. *Goetz* v. *Bank of Kansas City*, 551.
10. Declarations of an agent as to past transaction of his principal are inadmissible, as being mere hearsay. *Ib.*
11. In an action by a bank against the acceptor upon a draft discounted by the bank with a fraudulent bill of lading attached, the president of the bank, as a witness for it, having testified that he was ignorant of the forgeries, and also of the circumstances attending other drafts by the drawer with forged bills of lading attached which had been discounted by the bank, and that he could only explain why pains were

Digitized by Google

not taken in the matter by explaining the usage of the bank, it is competent for the court to receive such explanation of the usage. *Ib.*

12. When, under the law and practice in a state, a denial in one clause in an answer in a suit begun in a court of the state and removed to a Federal court is held to be qualified by an admission in another, and to excuse the plaintiff from the necessity of proof of it, the same rule prevails in the Federal court. *Northern Pacific Railroad* v. *Paine*, 561.

13. On a finding in the court below (1) that certain parol testimony is inadmissible because it tends to vary, explain, contradict, or qualify a written instrument discharging a mortgage; and (2) that if admitted it was not sufficient to prove any qualification or modification of the discharge, — it is immaterial in this court whether the court below was right in holding that the exception taken there to the parol evidence was error. *Ivinson* v. *Hutton*, 604.

14. Whenever it becomes necessary under Article IV, § 1, of the Constitution for a court of one state, in order to give faith and effect to a public act of another state, to ascertain what effect it has in that state, the law of the other state must be proved as a fact. *Chicago & Alton Railroad* v. *Wiggins Ferry Co.*, 615.

15. The courts of the United States, when exercising their original jurisdiction, take notice without proof, of the laws of the several states of the United States; but in this court, when acting under its appellate jurisdiction, whatever was matter of fact in the state court whose judgment or decree is under review, is matter of fact here. *Ib.*

See CONFLICT OF LAW;
DEED, 1;
JURISDICTION, A, 7;
LIS PENDENS;
PATENT FOR INVENTION, 8, 9;
PRACTICE, 2;
WITNESS.

EXCEPTION.

See COURT AND JURY, 1;
EVIDENCE, 7, 13.

EXTRADITION.

1. Apart from the provisions of treaties on the subject, there exists no well-defined obligation of one independent nation to deliver to another fugitives from its justice; and though such delivery has often been made, it was upon the principle of comity. The right to demand it has not been recognized as among the duties of one government to another which rest upon established principles of international law. *United States* v. *Rauscher*, 407.

2. In any question of this kind which can arise between this country and a foreign nation, the extradition must be negotiated through the Federal government, and not by that of a state, though the demand may be for a crime committed against the law of that state. *Ib.*

3. With most of the civilized nations of the world with which the United States have much intercourse, this matter is regulated by treaties, and

Digitized by Google

the question now decided arises under the treaty of 1842 between Great Britain and the United States, commonly called the Ashburton Treaty. *Ib.*

4. The defendant in this case being charged with murder on board an American vessel on the high seas, fled to England, was demanded of the government of that country, and was surrendered on this charge. The Circuit Court of the United States for the Southern District of New York, in which he was tried, did not proceed against him for murder, but for a minor offence not included in the treaty of extradition; and the judges of that court certified to this court for its judgment the question whether this could be done. *Held:* (1) That a treaty to which the United States is a party is a law of the land, of which all courts, state and national, are to take judicial notice, and by the provisions of which they are to be governed, so far as they are capable of judicial enforcement. (2) That, on a sound construction of the treaty under which the defendant was delivered to this country, and under the proceedings by which this was done, and acts of Congress on that subject, Rev. Stat. §§ 5272, 5275, he cannot lawfully be tried for any other offence than murder. (3) The treaty, the acts of Congress, and the proceedings by which he was extradited, clothe him with the right to exemption from trial for any other offence, until he has had an opportunity to return to the country from which he was taken for the purpose alone of trial for the offence specified in the demand for his surrender. The national honor also requires that good faith shall be kept with the country which surrendered him. (4) The circumstance that the party was convicted of inflicting cruel and unusual punishment on the same evidence which was produced before the committing magistrate in England, in the extradition proceedings for murder, does not change the principle. *Ib.*

5. A plea to an indictment in a state court, that the defendant has been brought from a foreign country to this country by proceedings which are a violation of a treaty between that country and the United States, and which are forbidden by that treaty, raises a question, if the right asserted by the plea is denied, on which this court can review, by writ of error, the judgment of the state court. *Kerr* v. *Illinois*, 436.

6. But where the prisoner has been kidnapped in the foreign country and brought by force against his will within the jurisdiction of the state whose law he has violated, with no reference to the extradition treaty, though one existed, and no proceeding or attempt to proceed under the treaty, this court can give no relief, for these facts do not establish any right under the Constitution, or laws, or treaties of the United States. *Ib.*

7. The treaties of extradition to which the United States are parties do not guarantee a fugitive from the justice of one of the countries an asylum in the other. They do not give such person any greater or more sacred right of asylum than he had before. They only make provision that for certain crimes he shall be deprived of that asylum

Digitized by Google

and surrendered to justice, and they prescribe the mode in which this shall be done. *Ib.*

8. The trespass of a kidnapper, unauthorized by either of the governments, and not professing to act under authority of either, is not a case provided for in the treaty, and the remedy is by a proceeding against him by the government whose law he violates, or by the party injured. *Ib.*

9. How far such forcible transfer of the defendant, so as to bring him within the jurisdiction of the state where the offence was committed, may be set up against the right to try him, is the province of the state court to decide, and presents no question in which this court can review its decision. *Ib.*

FEES.

See BANKRUPTCY, 2.

FORCIBLE ENTRY AND DETAINER.

There is nothing in the nature of the possession of a railroad, or of a section of a railroad, which takes it out of the operation of the language of the Statutes of Arkansas against forcible entry and detainer, or out of the general principle which lies at the foundation of all suits of forcible entry and detainer, that the law will not sanction or support a possession acquired by violence, but will, when appealed to in this form of action, compel the party who thus gains possession to surrender it to the party whom he dispossessed, without inquiring which party owns the property or has the legal right to the possession. *Iron Mountain & Helena Railroad* v. *Johnson*, 608.

FRAUD.

See EQUITY, 2, 4, 5.

GUARANTY.

See CONTRACT, 10.

HABEAS CORPUS.

This court will not issus a writ of *habeas corpus*, even if it has the power, (about which no opinion is expressed,) in cases where it may as well be done in the proper Circuit Court, if there are no special circumstances in the case, making direct action or intervention by this court necessary. *Ex parte Mirzan*, 584.

HUSBAND AND WIFE.

1. In Oregon there is no sound reason why a married woman, in possession with her husband of property which rightfully belongs to another, may not be jointly sued with him for its recovery. *Barrell* v. *Tilton*, 637.

2. A constitutional provision that "the property and possessory rights of every married woman . . . shall not be subject to the debts or

Digitized by Google

contracts of the husband" does not control her voluntary disposal of it, and in the absence of other restrictions she may mortgage it to secure the payment of a debt owing from the husband. In this case that question is not open to contention. *Ib.*

See LOCAL LAW, 2, 3.

INDIAN.

1. The relations between the United States and the Indian tribes being those of a superior towards an inferior, who is under its care and control, its acts touching them and its promises to them, in the execution of its own policy and in the furtherance of its own interests, are to be interpreted as justice and reason demand in cases where power is exerted by the strong over those to whom they owe care and protection. *United States* v. *Kagama*, 118 U. S. 375, cited and applied. *Choctaw Nation* v. *United States*, 1.
2. The act of March 3, 1881, 21 Stat. 504, authorizing the Court of Claims "to take jurisdiction of and try all questions of difference arising out of treaty stipulations with the Choctaw nation, and to render judgment thereon," and granting it power to review the entire question of differences *de novo*, and providing that "it shall not be estopped by any action had or award made by the Senate of the United States in pursuance of the Treaty of 1855," denied to that award conclusive effect as *res judicata*, but did not set it aside, or deny to it effect as *prima facie* evidence of the validity of the claims adjudged by it. The act operated to reopen that award and the questions decided by it, so far as to cast upon the United States, in the trial in the Court of Claims, the burden of disproving the justice and fairness of the award. *Ib.*
3. By the terms of the submission in the Treaty of June 22, 1855, 11 Stat. 611, under which the Senate acted as arbitrator of the differences between the United States and the Choctaws, it was clearly submitted to that body to determine whether, under all the circumstances, and as a matter of justice and fair dealing, the Choctaws ought to receive the proceeds of the sale of the lands ceded by them to the United States by the Treaty of September 27, 1830, 7 Stat. 333, whether as deducible from the terms of the treaty, or as a just compensation to be awarded to them for its breaches. The delegation by the Senate to the Secretary of the Interior to ascertain and report the detailed sums due the Choctaws upon the principles settled by the award was within the powers conferred upon that body by the terms of the submission. No notice to the United States was necessary of the intention of the Senate to proceed as arbitrator under the submission. And the whole proceedings were ratified and confirmed by the United States by the acts of March 2, 1861, 12 Stat. 238; and of June 23, 1874, 18 Stat. 230. *Ib.*
4. The award of the Senate upon the differences between the Choctaws and the United States, submitted to it under the provisions of the Treaty of June 22, 1855, furnishes the nearest approximation to the

Digitized by Google

justice and right of the case that, after the lapse of time, it is practicable for a judicial tribunal to reach; and, not being affected by any of the facts found by the Court of Claims, is taken by this court as the basis of its judgment on the subjects in dispute in this case, which arose prior to the treaty of 1855, and were passed upon in the award. In addition to the amount of that award, the Choctaw nation is entitled to further sums, (1) for unpaid annuities; and (2) for land taken from them in locating the boundary of Arkansas under the act of March 3, 1875, 18 Stat. 476. *Ib.*

See PUBLIC LAND, 1, 3, 4, 7.

INJUNCTION.

See PATENT FOR INVENTION, 7.

INSURANCE.

A policy of marine insurance was effected April 5 for a term of six months, with this agreement written in the margin: "This policy to continue in force from the date of expiration until notice is given this company of its discontinuance, the assured to pay for such privilege *pro rata* for the time used." On the 9th October following the assured sent to the insurer a check for $66.67, with a letter stating that it was "one monthly premium from Oct. 5 to Nov. 5" on the insurance "as specified in the policy." No other notice was given to the insurer before the loss, which happened November 6. *Held:* that the payment was not notice to discontinue the policy, nor an election to have it continued in force for the additional month and no longer, but that the policy continued in force by its own terms until the assured should give notice of its discontinuance. *Greenwich Ins. Co.* v. *Providence Steamship Co.*, 481.

INTERNATIONAL LAW.

See EXTRADITION.

INTOXICATION.

See EQUITY, 5.

JUDGMENT.

1. A personal judgment for costs may not be rendered against the defendant, on default, in an action of trespass to try title to real estate, if citation was served on him by publication, as a non-resident, and not personally; and if such judgment be entered, it cannot be enforced against other property of the defendant within the jurisdiction of the court. *Freeman* v. *Alderson*, 185.
2. A, a citizen of New Jersey, recovered judgment in a civil action on a contract against B, a citizen of Minnesota, whose property and estate

Digitized by Google

were situated, principally, in California. B died leaving a will by which he devised real estate and bequeathed legacies to various persons in Minnesota. The will was admitted to probate in Minnesota, and letters testamentary thereon were issued to C and D. Ancillary proof of it was then made in California, and letters testamentary thereon were issued to D, who administered the estate in California in accordance with the laws of that state, and distributed it according to the will, and rendered a final account to the probate court in California, and was discharged by that court. A did not present his claim for payment in California, and has never been paid. He brought suit on it in Minnesota against C as executor. C appeared and, among other defences, denied that he was or ever had been executor. The court found that C had accepted the trust, and entered judgment for A, on which judgment execution was awarded *de bonis propriis*. C brought the judgment to this court by writ of error, and died while it was pending here. His executor appeared, and on his motion the judgment was reversed as erroneous in form, *Smith* v. *Chapman*, 93 U. S. 41, and, the cause being remanded, the court, on the previous finding, entered judgment for A, *nunc pro tunc*, as of the date of the first judgment. A, within twelve months from the date when the last judgment *nunc pro tunc* was ordered, commenced suit in Minnesota to recover the amount of his judgment the statute of that state giving to the unpaid creditors of a testator a right of action against legatees, provided the action is commenced within one year from the time when the claim is established; and courts of Minnesota having settled that the claim must first be established by judicial proceedings, and that the suit against the legatees must be brought within one year from the date of such establishment. *Held:* (1) That the former judgment in this court concluded the executor of C in this suit from contending that C had not accepted the trust as executor. (2) That A was not barred by the proceedings and decrees in California for the prosecution of the suit. (3) That he had the right to follow into the hands of their holders in Minnesota the assets of B which had been distributed by order of the probate court in California. (4) That there was nothing to interfere with that right in the provision of the Constitution, respecting the faith to be given to judgments and public acts of each state in every other state. (5) That this action was not barred by the limitation in the Minnesota statute. *Borer* v. *Chapman*, 587.

3. Whether an order for entry of judgment *nunc pro tunc* shall be made, is matter of discretion with the court, to be exercised as justice may require, in view of the circumstances of the particular case, and it is a proper exercise of that discretion when, by reason of the intervening death of a party, there would otherwise be a failure of justice for which the other party is not responsible. *Ib.*

4. For the purpose of a statute of limitations the date of the entry of a judgment *nunc pro tunc* is the date of the order of such entry, and not the day as of which the judgment is ordered to take effect. *Ib.*

Digitized by Google

5. A court has control over its judgments during the term at which they are rendered, and may change their form to suit the purposes of justice; and though it would be more orderly in the second to refer to the first, and to explain the changes, it is not essential to do so, if a comparison of the two judgments or decrees discloses the changes or modifications made. *Barrell* v. *Tilton*, 637.

JURISDICTION.

A. Jurisdiction of the Supreme Court.

1. A decree, to be final for the purposes of appeal, must leave the case in such a condition that, if there be an affirmance in this court, the court below will have nothing to do but to execute the decree it has already entered. *Dainese* v. *Kendall*, 53.
2. The decision of the highest court of a state upon a motion, accompanied by affidavits as proof, to perpetually enjoin the collection of a judgment obtained in a court of the state on the ground of the discharge of the defendant in bankruptcy, raises a Federal question which may be reviewed by this court. *Palmer* v. *Hussey*, 96.
3. When a jury is waived in a territorial court in the trial of an action at law, the case cannot be brought up for review by writ of error; but must, under the act of April 7, 1874, c. 80, 18 Stat. 27, come, if at all, by appeal, as provided in that act. *Story* v. *Black*, 235.
4. The jurisdictional value referred to in c. 355, 23 Stat. 443, is the value at the time of the final judgment or decree; not at the time of the appeal or writ of error: the patent referred to in the second section of the act is a patent for an invention or discovery, not a patent for land. *Street* v. *Ferry*, 385.
5. After examining affidavits in the cause filed in the court below after allowance of appeal, and in this court since the case was docketed, the court is satisfied that the value of the land in dispute is not sufficient to give jurisdiction. *Ib.*
6. When the record in the court below is silent as to the value of the matter in dispute, it is good practice for that court to allow affidavits and counter-affidavits of value to be filed under directions from the court. *Wilson* v. *Blair*, 387.
7. The burden of proof is on plaintiff in error, when the record is silent as to the value of the subject-matter in dispute, to establish that it is of the jurisdictional value. *Ib.*
8. In the exercise of its general jurisdiction, appeals lie to this court, from judgments of the Court of Claims. *United States* v. *Jones*, 477.
9. As it appears that the right of the state of California to have the lands which are in dispute in this action listed is admitted, it is held that this court is without jurisdiction over the judgment of the Supreme Court of California upon the adverse claims of the parties. *Mace* v. *Merrill*, 581.
10. The equity jurisdiction of this court is independent of that conferred

Digitized by Google

by the states on their own courts, and can be affected only by the legislation of Congress. *Borer* v. *Chapman*, 587.

11. This court is without jurisdiction to vacate a supersedeas granted where no writ of error was sued out, as it has no legal effect. *Ex parte Ralston*, 613.
12. When the decision of a state court holding a contract valid or void is made upon the general principles by which courts determine whether a consideration is good or bad on principles of public policy, no question arises under the provision of the Constitution respecting the faith and credit to be given in each state to the public acts, records, and judicial proceedings of another state, and this court cannot review the decision. *Chicago & Alton Railroad* v. *Wiggins Ferry Co.*, 615.
13. In order to give this court jurisdiction to review a decision of a state court respecting the power of a corporation of another state to make a contract, it is not sufficient to aver in the pleadings that whatever force might be given to it in the court of the forum, it was beyond the powers of the corporation under its act of incorporation as construed by the courts of the state incorporating it; but it must appear affirmatively in the record that the facts as presented for adjudication, made it necessary for the court to consider and give effect to the act of incorporation in view of the peculiar jurisprudence of the state enacting it rather than the general law of the land. *Ib.*

See COURT OF CLAIMS; DIVISION OF OPINION; EVIDENCE, 14; EXTRADITION, 5; PARTIES; PRACTICE, 1.

B. JURISDICTION OF CIRCUIT COURTS OF THE UNITED STATES.

1. If the jurisdiction of the Circuit Court of the United States does not appear on the face of the record in some form, the decree is erroneous and must be reversed. *Peper* v. *Fordyce*, 469.
2. A, a citizen of Arkansas, conveyed to B, a citizen of the same state, real estate in Arkansas, in trust to secure the payment of notes due to C, a citizen of Missouri, with power of sale in case of non-payment. Subsequently A became insolvent and assigned his property to D, a citizen of Arkansas, in trust for the benefit of his creditors. *Held:* That, in proceedings in equity commenced by D to determine the amount of indebtedness from A to C, and to prevent the sale of the trust property by B, and to obtain a cancellation of the conveyance to B on payment of the amount found due to C, B was a necessary party, with interests adverse to D; and as both were citizens of the same state, and as the jurisdiction of the Circuit Court depended alone upon the citizenship of the parties, it was without jurisdiction. *Ib.*
3. A suit cannot be said to be one arising under the Constitution or laws of the United States until it has in some way been made to appear on the face of the record that "some title, right, privilege, or immunity, on which the recovery depends, will be defeated by one construction

Digitized by Google

of the Constitution or a law of the United States, or sustained by an opposite construction." *Germania Ins. Co.* v. *Wisconsin*, 473.

4. An insurance company of New Orleans was summoned into a state court of Wisconsin by the State in order to recover from it statutory penalties for doing business in the state without complying with its laws. Service of process was made on A, a citizen of Wisconsin who was described in the sheriff's return as "being then and there an agent" of the company. The company made a special appearance and moved to vacate all proceedings for want of jurisdiction, and filed in support of it affidavits to the effect that A was never its agent, and that it had no agent in the state and had had none for ten years then last past. *Held:* That this issue was a mixed question of law and fact, in no way dependent upon the construction of the Constitution or any law of the United States, and as the complaint disclosed no reason for the removal of the cause to a Federal court, it was not removable. *Ib.*

See REMOVAL OF CAUSES, 1, 5.

C. JURISDICTION OF DISTRICT COURTS OF THE UNITED STATES.

1. In the absence of an act of Congress or a statute of a state giving a right of action therefor, a suit in admiralty cannot be maintained in the courts of the United States to recover damages for the death of a human being on the high seas, or on waters navigable from the sea, which is caused by negligence. *The Harrisburg*, 199.

2. If a suit *in rem* can be maintained in admiralty against an offending vessel for the recovery of damages for the death of a human being on the high seas, or on waters navigable from the sea, which is caused by negligence, when an action at law is given therefor by statute in the state where the wrong was done or where the vessel belonged, (which is not decided,) it must be commenced within the period prescribed by the state statute for the beginning of process there; the time within which the suit should be commenced operating as a limitation of the liability created by statute, and not of the remedy only. *Ib.*

3. A declaration in an action at law in a Circuit Court of the United States by an administrator against an insurance company, which alleges that the intestate was a citizen of the state in which the action is brought, and that letters of administration were granted plaintiff in that state, and that the company is a citizen of another state, without any allegation respecting the citizenship of the administrator, fails to show a citizenship in the plaintiff to give the Circuit Court jurisdiction, and cannot be amended in that respect in this court: but the court below may, on the case being remanded, in its discretion, allow this to be done. *Continental Ins. Co.* v. *Rhoads*, 237.

4. A, a citizen of Alabama, filed a bill in equity in a court of that state, making the Memphis and Charleston Railroad, a corporation of

Digitized by Google

Tennessee, of Alabama, and of Mississippi, and the East Tennessee, Virginia and Georgia Railroad, a corporation of Tennessee and of Georgia, defendants. The bill alleged that complainant was a stockholder in the Memphis and Charleston Company, that a lease of the road of that company had been made to the other company for a term of years not yet expired, that the lease was not within the corporate power of either company, and that an arrangement had been made between the two companies, and was about to be carried into effect, for the surrender and cancellation of the lease on the payment by the lessor of a large sum of money to the lessee, which was to be raised by the sale of a large amount of new stock at a very low rate; and it prayed for an injunction to restrain the lessee from operating the road, and the lessor from paying the sum of money or any sum for the cancellation, and from issuing the new stock. On the petition of the lessee the suit was removed to the Circuit Court of the United States on the ground that the lessee was a citizen of Tennessee, and the complainant a citizen of Alabama, and that there was a controversy wholly between citizens of different states, which could be fully determined between them. The Circuit Court, on motion, remanded the cause. This court, on appeal, affirms that judgment. *East Tennessee, &c., Railroad* v. *Grayson*, 240.

5. When the jurisdiction of a circuit court of the United States in an action at law depends upon the citizenship of the parties to the suit, the declaration must show the necessary relative citizenship. *Halsted* v. *Buster*, 341.

D. JURISDICTION OF STATE COURTS.

See BANKRUPTCY, 2;
LOCAL LAW, 8.

KIDNAPPING.

See EXTRADITION, 5, 6, 7, 8, 9.

LICENSE FEE.

See CONSTITUTIONAL LAW, A, 1.

LIMITATION, STATUTES OF.

See JUDGMENT, 2 (5), 4;
JURISDICTION, C, 2.

LIQUIDATED DAMAGES.

See BOND.

LIS PENDENS.

The pendency of a suit relating to the validity of negotiable paper not yet due is not constructive notice to subsequent holders thereof before

Digitized by Google

maturity; and this general rule cannot be changed by state laws or decisions, so as to affect the rights of persons not residing and not being within the state. *Enfield* v. *Jordan*, 680.

LOCAL LAW.

1. Following the decisions of the Supreme Court of Texas, and also agreeing with them, this court holds that § 9 of the act of the Legislature of Texas, of March 18, 1848, so far as it conferred upon aliens a defeasible estate by inheritance from a citizen, notwithstanding the alienage, is not repealed by § 4 of the act of February 13, 1854; and that immediately after the passage of the British Naturalization Act of 1870, defeasible titles of British alien heirs to land in Texas became indefeasible. *Hanrick* v. *Patrick*, 156.
2. The general rule in Texas that property purchased during the marriage, whether the conveyance be to husband or wife, is *prima facie* community property holds only where the purchase is made with community funds; and the presumption may be rebutted by proof that the purchase was intended for the wife. *Ib.*
3. When a deed of land in Texas is made to a married woman for a nominal consideration, the presumption is that it was intended to vest the title in her as separate property. *Ib.*
4. A court-house in North Carolina being destroyed by fire, the county commissioners rented a building on another site, about two hundred yards distant from the old site, to be used as a court-house; and after five years' occupancy purchased the building and paid for the same by issuing bonds of the county to the seller. In an action on the bonds against the county; *Held:* That the act of the Legislature of North Carolina of 1868, c. 20, relating to the removal of county buildings, does not apply to such a case. *Washington County* v. *Sallinger*, 176.
5. The provisions contained in the proviso in § 5 of the act of the Legislature of North Carolina, of February 27, 1877, to establish county governments, apply only to commissioners to be chosen thereafter under the provisions of that act. *Ib.*
6. The service of process in this case having been upon the mayor of New Orleans, and the city having appeared and answered, the municipality is properly in court. *New Orleans* v. *Houston*, 265.
7. The effect of article 167, of the constitution of Louisiana of 1879, is to revive the charter of the Louisiana State Lottery Company of 1868, except as to the clause conferring upon it the exclusive privilege of establishing a lottery, and dealing in lottery tickets, notwithstanding its repeal in 1879; and to recognize the charter thus modified as a contract binding on the state for the period therein specified. *Ib.*
8. The jib-boom of a vessel towed by a steam-tug, in the Chicago River, at Chicago, Illinois, struck a building on land, through the negligence of the tug, and caused damage to it, and the loss of shelled corn stored in it. A statute of Illinois gave a lien on the tug for the dam-

Digitized by Google

age, to be enforced by a suit *in personam* against her owner, with an attachment against the tug, and a judgment *in personam* against her owner and the surety in a bond for her release. In such a suit, in a court of Illinois, to recover such damage, such a bond having been given, conditioned to pay any judgment in the suit, and the tug having been released, an application afterwards by J., claiming to be part owner of her, to be made a defendant in the suit, was denied, and a judgment for the damage was given against the defendant and the surety in the bond, without personal notice to the latter, which was affirmed by the Supreme Court of Illinois, on a writ of error from this court; *Held:* (1) The cause of action was not a maritime tort of which an admiralty court of the United States would have jurisdiction; (2) the state could create the lien and enact rules to enforce it, not amounting to a regulation of commerce, or to an admiralty proceeding *in rem*, or otherwise in conflict with the Constitution of the United States; (3) the actual proceeding in this case was a suit *in personam*, with an attachment to enforce the lien, and was not forbidden by that Constitution; (4) the provision of subdivision 6, of § 9, of article 1, of the Constitution of the United States, in regard to giving a preference to the ports of one state over those of another, is not a limitation on the power of a state; (5) the judgment against the surety was proper, as the statute provided for it, and formed part of the bond; (6) J. was not unlawfully denied a hearing, because he did not apply to be made a defendant until after the tug was discharged. *Johnson* v. *Chicago & Pacific Elevator Co.*, 388.

9. Where, under the Code of Practice of Louisiana, a steam-tug is sequestered by judicial process, and, under article 279, the plaintiff in sequestration gives a bond, with surety, to the sheriff, and takes the tug into his possession, and uses her, and afterwards restores her to the sheriff, he is not liable to the defendant in sequestration for the fruits or revenues of her use. *Baldwin* v. *Black*, 643.

10. Being in the lawful possession of the tug, his agent is not liable to the defendant in sequestration, either in contract or tort, in respect to any earnings of the tug, or any compensation for or value of her use. *Ib.*

11. The claim of the plaintiff in sequestration having been founded on a mortgage on the tug, and it appearing that on a sale of her to him, on a judgment in his favor in the sequestration suit, there was a deficiency in the net proceeds of her sale to pay the mortgage debt and certain lien and privileged debts, having precedence of the mortgage, which the plaintiff in sequestration paid, under subrogations, legal as well as express, to the rights of the creditors holding those debts, between the date of the seizure of the tug and the day of her sale, no cause of action could exist against the plaintiff in sequestration in respect to any earnings received by him from the use of the tug. *Ib.*

Digitized by Google

12. In Illinois an incorporated "town" and an incorporated "village" are one and the same thing. *Enfield* v. *Jordan*, 680.
13. In Illinois the making the place of payment of a municipal bond at a place which is not the office of the treasurer of the municipality does not affect the validity of the bond, or charge the holder of such a bond, being negotiable and not yet matured, with notice of judicial proceedings between a previous holder and the municipality so as to work an estoppel. *Ib.*

See CONFLICT OF LAW; COURT AND JURY, 2; EXTRADITION, 9; HUSBAND AND WIFE, 1; NAVIGABLE STREAM, 2; REMOVAL OF CAUSES, 6.

MARRIED WOMAN.

See HUSBAND AND WIFE; LOCAL LAW, 2, 3.

MASTER AND SERVANT.

1. While A, a longshoreman in the employ of a steamship company, was engaged in his regular work, a tub filled with coal fell upon him and injured him seriously. The fall was caused by the breaking of a rope which suspended the tub. A sued the company to recover damages, claiming that the injury was caused by the negligence of B in not providing a proper rope to hold the tub after notice of the insufficiency and weakness of the one which broke, and that B was an agent of the company, for whose acts or omissions it was responsible. The company defended, setting up (1) contributory negligence in A; and (2) that B was a fellow-servant of A, for whose acts or omissions the company was not responsible. The judge who presided at the trial refused to direct a verdict for the company, and referred the question of contributory negligence to the jury; and also referred to them the question as to what the authority of B was. There were various exceptions by the company to the charge, and to refusals to charge. A verdict was rendered in favor of A, and judgment entered on the verdict. This court affirms that judgment by a divided court. *Cunard Steamship Co.* v. *Carey*, 245.
2. Defendant in error was in the employ of plaintiff in error as a car repairer. While mounted at a side track upon a ladder which rested against a car that he was repairing by order of his immediate superior, he was thrown from the ladder by reason of the car being struck by a switching engine and car, and was seriously injured. He brought a suit against the railway company under § 1307, Code of Iowa of 1873. The railway company defended upon the grounds: (1) that there was no negligence on the part of its employés which entailed responsibility on the company; (2) that there was contributory negligence on the part of the plaintiff below. The case was tried before a jury, and resulted in a verdict of $15,000 for plaintiff below, and

Digitized by Google

judgment was entered on the verdict. This court, on the case made by the record in error, affirms that judgment by a divided court. *Chicago & Northwestern Railway* v. *McLaughlin*, 566.

MINERAL LAND.

See COURT AND JURY, 2.

MUNICIPAL BOND.

1. Bonds issued by a town in Illinois, signed by its supervisor and town clerk, as a donation to a railroad company, stated that the faith, credit, and property of the town were thereby pledged, "under authority of" an act of the General Assembly of the state, giving its title and date, and each bond also stated that it and other bonds, giving their numbers and amounts, were "the only bonds issued by said town" "under and by virtue of said act." The act prescribed the general route of the road, and authorized the town to make a donation to the company, to aid in constructing and equipping the road, if the donation should be voted for as prescribed. It provided for a written application by voters to the town clerk to have an election held, and the giving by him of notice of the election; that the election should "be held and conducted and return thereof made as is provided by law;" and that, if a majority of the legal voters voting should vote for the donation, the town should, "by its proper corporate authorities," make the donation, as should "be determined at said election," and should issue to the company its bonds, "signed by the supervisor and countersigned by the clerk," and should, "by its proper corporate authority," levy an annual tax to pay interest and principal. The application was made, and the notice given, and the election was held and presided over, not by the election judges of the town, but by a moderator and the town clerk, in the manner required for the election of town officers, and resulted in a majority for the donation. The terms of the vote were that the bonds should not be issued, and the vote should be void, unless the road was completed by a day specified. The road was not completed by that day. The supervisor and one of the two justices of the town having resigned, the other justice and the town clerk, on the day before an election for a justice was to be held, appointed a new supervisor, antedating the appointment papers more than three months, to the day after the supervisor resigned, and the new supervisor, and the town clerk, on the same day, signed the bonds and delivered them to the company. The next day a new justice and a new supervisor were elected by the people. In a suit against the town, to recover on coupons cut from the bonds, by a *bona fide* holder of the bonds and coupons for a valuable consideration, without notice, it was set up in defence, that the officers of the company conspired with the justice and the town clerk, and their appointee, to have the bonds issued before a new supervisor should be elected by

Digitized by Google

the people; *Held:* (1) The bonds were not void, as having been executed through "fraud or circumvention," under the statute of Illinois, Gross' Stat., 1869, vol. 1, 3d ed., c. 73, p. 462, § 11. (2) The appointment of the supervisor was valid. (3) The bonds were issued in compliance with a vote of the people held prior to the adoption of the Illinois constitution of 1870, in pursuance of a law providing therefor, within the meaning of § 12, of article 9, of that constitution, although the condition as to the completion of the road was not complied with, because, as against the plaintiff, the recitals in the bonds were made by officers intrusted under the statute, with the duty of determining whether the condition had been complied with, and the town was thereby estopped from asserting the contrary. (4) The election was properly held, though presided over by a moderator, and the donation was, therefore, authorized under existing laws, by a vote prior to the adoption of additional section or article 2 to the constitution of Illinois, within the meaning of that section. *Oregon* v. *Jennings*, 74.

2. In a suit on bonds of the same issue as those adjudged to be invalid, in *McClure* v. *Township of Oxford*, 94 U. S. 429, it was sought to uphold the bonds as issued under the general act of Kansas, of March 2d, 1872, c. 68, the bonds purporting, by their face, to have been issued under the special act of March 1, 1872, c. 158. As the general act required certain proceedings to be taken before the bonds could be lawfully issued, and the town records showed that those proceedings were not taken, and that all that was done under the special act, the possibility that the bonds were issued under the general act was excluded, and the recitals in the bonds could not aid the plaintiff. *Crow* v. *Oxford*, 215.

3. The certificate of the auditor of the state, indorsed on each bond, that it was "regularly and legally issued," purporting to have been made in accordance with the general act, could not aid the plaintiff, because the bonds were not such as the auditor was authorized by that act to register and certify. *Ib.*

See LOCAL LAW, 4.

MUNICIPAL CORPORATION.

1. The provision in the act of February 24, 1869, of the legislature of Illinois, giving authority to "any village, city, county, or township organized under the township organization law, or any other law of the state, along or near the route of the railway" therein mentioned, "to subscribe to the stock of the railroad company, or make donations to it," applies to a town along or near the route. *Enfield* v. *Jordan*, 680.

2. The proviso in the clause of the constitution of Illinois regarding municipal subscriptions to the stock of, or donations or loan of credit to, railroads or private corporations, applies to donations as well as to subscriptions to stock. *Ib.*

See LOCAL LAW, 4, 5, 12, 13.

Digitized by Google

NATIONAL BANK.

See BAILMENT, 2.

NAVIGABLE STREAM.

1. A river does not change its legal character as a highway if crossings by bridges or ferries are allowed under reasonable conditions, or if dams are erected under like conditions. *Huse* v. *Glover*, 543.
2. If, in the opinion of a state, its commerce will be more benefited by improving a navigable stream within its borders, than by leaving the same in its natural state, it may authorize the improvements, although increased inconvenience and expense may thereby attend the business of individuals. *Ib.*

See DAMAGES, 2.

NEGLIGENCE.

See BAILMENT, 1, 2;
JURISDICTION, C, 1, 2;
MASTER AND SERVANT, 1, 2.

NEGOTIABLE PAPER.

See BILLS OF EXCHANGE;
EVIDENCE, 9, 11;
LIS PENDENS;
PAYMENT.

ORDINANCE OF 1787.

The provision in the ordinance of 1787 that the navigable waters leading into the Mississippi and the St. Lawrence shall be common highways, forever free, without tax, impost, or duty therefor, refers to rivers in their natural state, and does not prevent the state of Illinois from improving the navigation of such waters within its limits, or from charging and collecting reasonable tolls from vessels using the artificial improvements, as a compensation for the use of the artificial facilities. *Huse* v. *Glover*, 543.

PARTIES.

When the statutes of the state in which an action at law in a Federal court is tried permit a third party to intervene *pro interesse suo*, as in equity, and on the trial a general verdict is rendered and a general judgment entered against both the intervenor and the losing party, the intervenor is not a necessary party to the writ of error to this court, if his interest is clearly separable and distinct. *Hanrick* v. *Patrick*, 156.

See LOCAL LAW, 1.

PATENT FOR INVENTION.

1. In view of the construction given in *Consolidated Safety-Valve Co.* v. *Crosby Steam-Gauge and Valve Co.*, 113 U. S. 157, to the claim of

Digitized by Google

letters-patent No. 58,294, granted to George W. Richardson, September 25th, 1866, for an improvement in safety-valves, and to the claim of letters-patent No. 85,963, granted to said Richardson, July 19th, 1869, for an improvement in safety-valves for steam-boilers or generators, the defendant's safety-valves in this case, having no huddling chamber, and no strictured orifice, were held not to infringe either patent. *Consolidated Safety-Valve Co.* v. *Kunkle*, 45.

2. The claim of the inventor in letters-patent must be construed according to its terms; and when its import is plain, resort cannot be had to the context for the purpose of enlarging it. *White* v. *Dunbar*, 47.
3. A reissue which materially enlarges the claim in the original letters-patent, and which was made five years after their issue, is held to be invalid. *Ib.*
4. In a suit in equity by the trustees of a dissolved Missouri corporation to compel an employé of the corporation to convey to the plaintiffs the title to letters-patent obtained by him for an invention made while he was in their employ, it not appearing, from the facts set forth in the bill, that there was any agreement between the employé and the corporation, that it was to have the title to the invention, or to any patent he might obtain for it, it was held, on demurrer, that the bill could not be sustained. *Hapgood* v. *Hewitt*, 226.
5. Although the dissolved corporation assigned its right in the premises to an Illinois corporation organized by the stockholders of the former, whatever implied license the former had to use the invention was confined to it, and was not assignable. *Ib.*
6. The employé could bring no suit for infringement against the Missouri corporation, for it was dissolved; nor any suit in equity against its trustees, for an infringement, for they were not alleged to be using the invention; and a suit at law against the trustees, or the stockholders, of the Missouri corporation, for infringement by it, could not be enjoined, because the theory of the bill was that there was a perfect defence to such a suit. *Ib.*
7. If a suit in equity to restrain from infringing letters-patent and to recover profits and damages, be commenced so late that under the rules of the court no injunction can be obtained before the expiration of the patent, the bill should be dismissed for want of equity jurisdiction: but if it be begun in such time that an injunction can be obtained before the expiration of the patent, although only three days remain for it to run, it is within the discretion of the court to take jurisdiction; and if it does so, it may, without enjoining the defendant, proceed to grant the other incidental relief sought for. *Clark* v. *Wooster*, 322.
8. This court will not assume, without proof, that a reissue made fourteen years after the issue of the original patent enlarges the original claim, or that it was sought for the purpose of enlarging it. *Ib.*
9. Established license fees are the best measure of damages in suits for infringing patents. *Ib.*

Digitized by Google

10. The claim of letters-patent No. 187,100, granted to John Clark, February 6th, 1877, for an "improvement in cheese-formers for cider-presses," namely, "The guide-frame D, in combination with an extended pomace-rack, and a cloth to enclose a layer of pomace therein, substantially as described," is invalid, because it did not require invention to use the described guide-frame in connection with the racks and the cloths. *Pomace Holder Co.* v. *Ferguson*, 335.

11. The racks and the cloths had been before used in connection, and an enclosure was used with them, which enabled the operator to make the pomace of uniform depth on each rack, and prevented the lateral spreading of the pomace; and it required only ordinary mechanical skill and judgment to make either the guide-frame or the rack of the desired size. *Ib.*

12. The first claim of reissued letters-patent No. 8986, granted to Robert Newton, December 2d, 1879, for an improvement in gang-ploughs, (the original patent, No. 56,812, having been granted to F. S. Davenport, as inventor, October 9th, 1886,) namely, "1. In a wheel-plough, the combination, with a swing-axle and ground or carrying-wheel, of friction-clutch mechanism, and means for engaging and disengaging the latter with the ground or carrying-wheel, said parts being constructed and adapted to raise the plough by locking the swing-axle to the carrying-wheel by friction-clutch engagement, and raise the plough-beam by the draft or power of the team, substantially as set forth," is, in view of the state of the art at the time of the invention of Davenport, not improved by an apparatus in which the axle and the friction-clutch mechanism are different, as devices, from those of the patent. *Newton* v. *Furst & Bradley Co.*, 373.

13. The first claim of the reissue is invalid, the reissue having been applied for more than thirteen years after the original patent was granted, and after the defendant had begun to make machines of the pattern complained of. *Ib.*

14. The defendant's machine did not infringe the original patent, and the reissue was taken to cover it. *Ib.*

15. Reissued letters-patent No. 4364, granted to John J. Schillinger, May 2d, 1871, for an improvement in concrete pavements, on the surrender of original letters-patent No. 105,559, granted to him July 19th, 1870, are not, in view of the disclaimer filed by the patentee, March 1st, 1875, infringed by the defendant's pavement in this case. *California Paving Co.* v. *Schalicke*, 401.

16. A patentee is not at liberty to insist in the courts upon a construction of his patent which the Patent Office required him to expressly abandon and disavow as the condition of the issue of his patent. *Sutter* v. *Robinson*, 530.

17. The improvement in the apparatus for resweating tobacco which was patented to Abraham Robinson, June 10th, 1879, by letters-patent No. 216,293, consisted in the substitution of a wooden vessel in place of a metallic one for holding the tobacco while being resweated. *Ib.*

Digitized by Google

18. The first claim of letters-patent No. 177,334, granted to Abner B. Hutchins, May 16th, 1876, for an improvement in hydro-carbon stoves, namely, "1. The water-vessel A, with its perforated top-plate A′ and hot-air 'cylinder' C, hinged at *c* to plate A′, and top perforated plate L, all arranged and connected together substantially as and for the purpose set forth," the perforated top-plate A′ being described in the specification as a plate in which, arranged around a central opening, is a series of perforations "through which atmospheric air passes down into the top part of the vessel A, and thence up through the hot-air cylinder and its chimneys," is not infringed by a stove in which, instead of the perforated top-plate A′, there are three equidistant struts on which the hot-air cylinder rests, with an open space between every two of the struts, the struts not performing the office so described as that performed by the perforated top-plate A′. *Sharp* v. *Riessner*, 631.

19. It is the duty of a patentee, receiving letters-patent for an invention, to examine them within a reasonable time to ascertain whether they fully cover his invention; and if he neglects so to do for the period of three years, and the real invention is then found to be infringed by a construction which is manufactured and sold without infringing the patent as originally granted, he must suffer the penalty of his own laches, and cannot, by means of a reissue, correct the error. *Ives* v. *Sargent*, 652.

20. The reissue No. 9901, dated October 18, 1881, of letters-patent No. 202,158, dated April 9, 1878, and granted to Frank Davis for an improvement in door-bolts is void, as containing new matter introduced into the specification, and as being for a different invention from that described in the original patent. *Ib.*

21. When two persons invent the same invention at about the same time, and employ the same solicitor, who in good faith assigns the priority of invention to the wrong person, and makes claims and takes out patents for each on that theory, limiting the claim of the real inventor to a narrower claim, not within the claim of the other inventor, and both acquiesce in this decision for a period of nine or ten years, the acquiescence of the real inventor must be regarded, so far as his claims are concerned, as an abandonment of any right on his part to a patent for the broad and real invention; and so far as the patentee of it is concerned, the validity of his patent fails, because he was not the inventor, and was not entitled to the patent. *Hartshorn* v. *Saginaw Barrel Co.*, 664.

22. The shade roller manufactured by the appellee does not infringe patent No. 69,169, granted to Jacob David, September 24, 1867, and assigned to the appellants. *Ib.*

See JURISDICTION, A, 4.

PAYMENT.

A creditor who receives from his debtor a negotiable instrument of the debtor for the amount of his debt, and sells it for its market value to

Digitized by Google

a third person, cannot sue the debtor on the original debt. *Donnelly* v. *District of Columbia*, 339.

PENALTY.

See BOND.

PLEADING.

See EVIDENCE, 12;
EXTRADITION, 5;
JURISDICTION, B, 4; C, 3, 5.

PLEDGE.

See LOCAL LAW, 9, 10, 11.

PRACTICE.

1. The opinion of the highest court of New York, authenticated by the proper officer, and transmitted to this court with the record in compliance with Rule 8, examined to aid in determining whether that court decided against defendant the Federal question stated in CONSTITUTIONAL LAW, 1. *Philadelphia Fire Ass'n* v. *New York*, 110.
2. When it is within the discretion of the court whether to admit evidence in rebuttal which might have been offered in chief, the party offering it is entitled to the exercise of the discretion at the time of the offer. *French* v. *Hall*, 152.
3. On a finding in the court below (1) that certain parol testimony is inadmissible because it tends to vary, explain, contradict or qualify a written instrument discharging a mortgage; and (2) that if admitted it was not sufficient to prove any qualification or modification of the discharge, — it is immaterial in this court whether the court below was right in holding that the exception taken there to the parol evidence was error. *Ivinson* v. *Hutton*, 604.

See JURISDICTION, A, 1, 2, 5;
WRIT OF ERROR, 2.

PREFERRED STOCK.

See CORPORATION, 6.

PRINCIPAL AND AGENT.

See COLLECTOR OF CUSTOMS;
EVIDENCE, 10.

PUBLIC LAND.

1. The grant by the act of Congress of July 2, 1864, to the Northern Pacific Railroad Company, of lands to which the Indian title had not been

Digitized by Google

extinguished, operated to convey the fee to the company, subject to the right of occupancy by the Indians. *Buttz* v. *Northern Pacific Railroad*, 55.

2. The manner, time, and conditions of extinguishing such right of occupancy were exclusively matters for the consideration of the government, and could not be interfered with nor put in contest by private parties. *Ib.*
3. The agreement of the Sisseton and Wahpeton bands of Dakota or Sioux Indians for the relinquishment of their title was accepted on the part of the United States when it was approved by the Secretary of the Interior, on the 19th of June, 1873. That agreement stipulating to be binding from its date, May 19, 1873, and the Indians having retired from the lands to their reservations, the relinquishment of their title, so far as the United States are concerned, held to have then taken place. *Ib.*
4. Upon the definite location of the line of the railroad, on the 26th of May, 1873, the right of the company, freed from any incumbrance of the Indian title, immediately attached to the alternate sections; and no preëmptive right could be initiated to the land, so long as the Indian title was unextinguished. *Ib.*
5. When the general route of the road provided for in section six of the act of July 2, 1864, was fixed, and information thereof was given to the Land Department by the filing of a map thereof with the Secretary of the Interior, the statute withdrew from sale or preëmption the odd sections to the extent of forty miles on each side thereof; and, by way of precautionary notice to the public, an executive withdrawal was a wise exercise of authority. *Ib.*
6. The general route may be considered as fixed, when its general course and direction are determined, after an actual examination of the country or from a knowledge of it, and it is designated by a line on a map, showing the general features of the adjacent country and the places through or by which it will pass. *Ib.*
7. That part of section three of said act, which excepts from the grant lands reserved, sold, granted, or otherwise appropriated, and to which a preëmption and other rights and claims have not attached, when a map of definite location has been filed, does not not include the Indian right of occupancy within such "other rights and claims;" nor does it include preëmptions where the sixth section declares that the land shall not be subject to preëmption. *Ib.*
8. Where, under the eighth section of the act of July 23, 1866, "to quiet land titles in California," a survey is made by the United States Surveyor General for California of a claim to land under a confirmed Mexican grant, and land is set off by him in satisfaction of the grant, the survey is operative without the approval of the Commissioner of the General Land Office. Land lying outside of such survey then becomes subject to state selection in lieu of school sections covered by

Digitized by Google

the grant, and is open to settlement under the preëmption laws. *McCreery* v. *Haskell*, 327.

9. As between the state and the settler, the party which first commences the proceedings required to obtain the title, if they are followed up to the final act for its transfer, is considered to have priority of right. The rule prevails in such cases, first in time first in right. *Ib.*

10. For lands selected by the state of California, it has not been the practice of the Land Department to issue patents. When the selections are approved by the Secretary of the Interior, a list of them, with the certificate of the Commissioner of the General Land Office, is forwarded to the state authorities. This listing operates to transfer the title to the lands, as of the date when the selections were made and reported to the local land office, and cuts off all subsequent claimants. Accordingly, where a selection was made in 1868, which was subsequently approved by the Secretary of the Interior, and the lands were listed to the state by the Commissioner of the General Land Office, a patent for the same lands issued upon a settlement made in December, 1869, under the preëmption laws, conferred no title as against the state. *Ib.*

11. The entry in the Land Office of a portion of the public lands in the territory of Montana, settled upon and occupied as a town-site, under the act of Congress of March 2, 1867, "for the relief of the inhabitants of cities and towns on the public lands," being "in trust for the several use and benefit of the occupants thereof, according to their respective interests; the execution of which trust, as to the disposal of the lots in such town, and the proceeds of the sales thereof, to be conducted under such rules and regulations as may be prescribed by the legislative authority of the state or territory in which the same may be situated," it was held that the occupant of a lot in the town which had been surveyed and platted into streets, alleys, blocks, and lots, continued to possess after such entry the same right of way over an adjoining alley which he had previously possessed as appurtenant to his lot. *Ashby* v. *Hall*, 526.

12. The interests which the occupants possessed previous to the entry, either in the land occupied by them or in rights of way over adjoining streets and alleys, were secured by it. *Ib.*

13. The power vested in the legislature of the territory was confined to regulations for the disposal of the lots and the proceeds of the sales. These regulations might extend to provisions for the ascertainment of the nature and extent of the occupancy of different claimants of lots, and the execution and delivery to those found to be occupants in good faith of some official recognition of title in the nature of a conveyance; but they could not authorize any diminution of the rights of the occupants when the extent of their occupancy was established. *Ib.*

14. The legislature of the territory could not, under the authority conferred by the above act of Congress, change or close the streets, alleys,

Digitized by Google

and blocks of the town by a new survey. Whatever power it may have over them does not come from the town-site act, but, if it exist at all, from the general grant of legislative power under the organic act of the territory. *Ib.*

See COURT AND JURY, 2;
EVIDENCE, 4, 5.

RAILROAD.

See CORPORATION, 6;
DAMAGES, 2;
EVIDENCE, 1, 2;
FORCIBLE ENTRY AND DETAINER;
PUBLIC LAND, 4, 5, 6, 7.

REMOVAL OF CAUSES.

1. A suit against a collector of the customs in a state court, in which the declaration alleges that the collector by his deputy delivered imported goods upon which there was a lien for freight to the consignee on receipt of the freight charges, without notifying the carrier as required by the act of June 10, 1880, § 10, 21 Stat. 175, and which seeks to recover the money so received, is removable into the Circuit Court of the United States under Rev. Stat. § 643, although the collector may allege in his defence that the act charged was not done. *Cleveland & Columbus Railway* v. *McClung*, 454.
2. Subsections "First" and "Second" of Rev. Stat. § 639, relating to the removal of causes from state courts to Federal courts, were repealed by the act of March 3, 1875, 18 Stat. 470; but subsection "Third" was not so repealed. *Baltimore & Ohio Railroad* v. *Bates*, 464.
3. Under subsection "Third" of Rev. Stat. § 639, a petition for the removal of a cause from a state court to a Federal court may be filed at any time before final trial or hearing. *Ib.*
4. On a petition for removal of a cause from a state court under subsection "Third" of Rev. Stat. § 639, the petitioning party is required to offer to the court the "good and sufficient surety" required by that section for the purposes therein set forth; and not the surety required by the act of March 3, 1875, § 3, 18 Stat. 471, for the purposes named in that act. *Ib.*
5. A suit by a state in one of its own courts cannot be removed to a Federal court under the act of 1875, unless it be a suit arising under the Constitution or laws of the United States, or treaties made under their authority. *Germania Ins. Co.* v. *Wisconsin*, 473.
6. On the 31st December, 1884, A, a citizen of Pennsylvania, sued out of a court of that state a summons, in an action on contract to recover a balance of money lent, against B, a citizen of New York, and C, a citizen of Pennsylvania, surviving partners of D, returnable on the 1st Monday in January then next, and C accepted service before the return day. On the 26th of January, 1885, judgment was entered against both

Digitized by Google

defendants for want of defence, under the practice in that state. On the 3d February, 1885, B voluntarily appeared and accepted service with the like force as if the writ had been returnable on the 1st Monday in April and had been served on the 1st Monday in March. On May 2, 1885, B filed his affidavit of defence, and immediately filed a petition for the removal of the cause to the Circuit Court of the United States, on the ground that the controversy in the suit was between citizens of different states. The cause being removed, it was, on motion of the plaintiff, remanded to the state court on the ground that it appeared by the record that defendants were not both citizens of another state than plaintiff, and that plaintiff was a citizen of Pennsylvania. *Held:* (1) That under the practice in Pennsylvania this was a proceeding in the original suit, under the original cause of action; (2) that the controversy was not a separable one within the meaning of the removal act of 1875; (3) that the fact that the liability of C had been fixed by the entry of judgment against him did not affect the principle. *Brooks* v. *Clark*, 502.

7. A removal of a cause from a state court to a Federal court made on a petition under the act of March 3, 1875, 18 Stat. 470 on the ground of a separable controversy, takes the whole cause from the jurisdiction of the state court; but a removal for the same cause under the act of 1866 may take only the separate controversy of the petitioning defendant, leaving the state court to proceed against the other defendants. *Ib.*

8. A suit cannot be removed from a state court to a circuit court of the United States on the ground of prejudice or local influence, under subsection 3 of § 639 Rev. Stat., unless all the plaintiffs or all the defendants are citizens of the state in which the suit was brought, and of a state other than that of which those petitioning for the removal are citizens. *Hancock* v. *Holbrook*, 586.

See CONSTITUTIONAL LAW, 4;
JURISDICTION, B, 3, 4; C, 4.

SALE.

See CONTRACT, 7, 8.

SEQUESTRATION.

See LOCAL LAW, 9, 10, 11.

SERVICE OF PROCESS.

See LOCAL LAW, 6.

STATUTE.

A. CONSTRUCTION OF STATUTES.
See CONFLICT OF LAW;
CORPORATION, 2, 3.

Digitized by Google

B. STATUTES OF THE UNITED STATES.

See COLLECTOR OF CUSTOMS;
COURT AND JURY, 2;
EVIDENCE, 5, 8;
EXTRADITION, 4 (2);
INDIAN, 2, 3, 4;
JURISDICTION, A, 3, 4;
PUBLIC LAND, 1, 5, 7, 8, 10, 11;
REMOVAL OF CAUSES.

C. STATUTES OF STATES AND TERRITORIES.

Iowa. *See* CONSTITUTIONAL LAW, A, 4;
MASTER AND SERVANT, 2.
Illinois. *See* LOCAL LAW, 3, 8, 12, 13;
MUNICIPAL BOND, 1;
MUNICIPAL CORPORATION, 1.
Kansas. *See* MUNICIPAL BOND, 2.
Louisiana. *See* DAMAGES, 2;
LOCAL LAW, 7, 9, 10, 11.
Minnesota. *See* JUDGMENT, 2.
Missouri. *See* EVIDENCE, 4.
Montana. *See* COURT AND JURY, 2.
New York. *See* CONSTITUTIONAL LAW, A, 1, 3.
North Carolina. *See* LOCAL LAW, 4, 5.
Pennsylvania. *See* REMOVAL OF CAUSES, 6.
Texas. *See* LOCAL LAW, 1.

D. FOREIGN STATUTES.

Great Britain. *See* LOCAL LAW, 1.

SUPERSEDEAS.

See JURISDICTION, A, 11.

TAX AND TAXATION.

See CORPORATION, 5.

TERRITORIAL LEGISLATION.

See PUBLIC LAND, 13, 14.

TONNAGE DUTY.

See CONSTITUTIONAL LAW, A, 5.

TRANSCRIPT OF RECORD.

See WRIT OF ERROR, 2.

TREATIES.

See EXTRADITION.

TRUST.

The evidence in this case, if admissible, establishes as a fact that the defendant was entitled to reimburse himself in full out of the trust estate before satisfying the demand of the plaintiff. *Newhall* v. *Le Breton*, 257.

Digitized by Google

WITNESS.

An attorney at law, prosecuting or defending in a civil action, is a competent witness on behalf of his client at the trial of the action. *French* v. *Hall*, 152.

See EVIDENCE, 8.

WRIT OF ERROR.

The clerk below is not required to furnish a transcript of the record in a cause in error, until a writ of error has issued to which it can be annexed. *Ex parte Ralston*, 613.

In error to a state court it has been the prevailing custom, from the beginning, for the clerk of this court or the clerk of the Circuit Court for the proper circuit to issue the writ, and for such writ to be lodged with the clerk of the state court before he could be called on to make the necessary transcript to be lodged in this court. *Ib.*

See JURISDICTION, A, 3.

PARTIES.

Digitized by Google

Digitized by Google

Digitized by Google

Digitized by Google

Digitized by Google

Digitized by Google

3 2044 106 524 762

Digitized by Google